F:\12\12-0950-02\CAD\Final-Ph4\Cover.dwg, 1 COVER SHEET, 6/7/2022 2:22:16 PM, 1:1

FINAL PHASE 4 & REVISED FINAL PHASE 3 SUBDIVISION PLAN
FOR
THE CROSSINGS AT SWEET BRIAR
NORTH LEBANON TOWNSHIP — LEBANON COUNTY, PA

GENERAL NOTES

1. EXISTING FEATURES SHOWN ON THIS PLAN ARE PER A FIELD SURVEY PERFORMED BY HERSHEY SURVEYING, INC. ON OCTOBER 28, 2016. ADDITIONAL AS–BUILT DATA WAS OBTAINED ON MARCH 3, 2021 BY HERSHEY SURVEYING, INC. HORIZONTAL LOCATIONS & VERTICAL ELEVATIONS AT THE EXISTING STREET TERMINUSES, STORMWATER FACILITIES & UGI GAS LINE HAS BEEN OBTAINED.
2. THE BENCHMARK A SANITARY MANHOLE AND IS LOCATED ALONG THE EAST SIDE OF MOUNT ZION ROAD, NORTH OF THE EXISTING GRAVEL DRIVEWAY.
   SURVEY BENCHMARK: INVERT OF EXISTING SANITARY MANHOLE
   ELEVATION=645.40 (ELEVATIONS REFER TO "BRIAR LAKE SUBDIVISION – PHASE III," RECORDED IN PLAN BOOK 63, PAGE 163, LEBANON COUNTY RECORDS)
3. BASIS OF BEARINGS IS BASED ON "BRIAR LAKE SUBDIVISION – PHASE III," RECORDED IN PLAN BOOK 63, PAGE 163, LEBANON COUNTY RECORDS.

NOTES CONTINUED ON SHEET 2

LEBANON COUNTY PLANNING DEPARTMENT REVIEW CERTIFICATE:

THIS PLAN WAS APPROVED FOR NORTH LEBANON TOWNSHIP BY

THE LEBANON COUNTY PLANNING DEPARTMENT THIS _____ DAY

OF ___________, 20__.

____

CERTIFICATE OF REVIEW BY THE LEBANON COUNTY ENGINEER:

REVIEWED BY THE LEBANON COUNTY ENGINEER THIS

_____________ DAY OF _______________, 20___.

____

CERTIFICATION FOR REVIEW BY THE PLANNING COMMISSION:

AT A MEETING HELD ON _________________________, 20___, THE PLANNING COMMISSION OF NORTH LEBANON TOWNSHIP, BY MOTION DULY ENACTED, RECOMMENDED APPROVAL OF THE FINAL PLAN AS SHOWN AND DESCRIBED HEREON.

____
CHAIRPERSON

CERTIFICATION FOR FINAL PLAN APPROVAL BY THE BOARD OF SUPERVISORS:

AT A MEETING HELD ON _________________________, 20___, THE NORTH LEBANON TOWNSHIP BOARD OF SUPERVISORS, BY MOTION DULY ENACTED, APPROVED THE FINAL PLAN AS SHOWN AND DESCRIBED HEREON.

____
CHAIRPERSON

____

____

CERTIFICATION OF ACCURACY (SURVEY):

I HEREBY CERTIFY THAT, TO THE BEST OF MY KNOWLEDGE, THE SURVEY SHOWN AND DESCRIBED HEREON IS TRUE AND CORRECT TO THE ACCURACY REQUIRED BY THE LEBANON COUNTY SUBDIVISION AND LAND DEVELOPMENT ORDINANCE.

6/6, 20 22 * ______________________

COMMONWEALTH OF PENNSYLVANIA — REGISTERED PROFESSIONAL — RONALD L. HERSHEY, JR. — LAND SURVEYOR — No. 054427 E

CERTIFICATION OF ACCURACY (PLAN):

I HEREBY CERTIFY THAT, TO THE BEST OF MY KNOWLEDGE, THE PLAN SHOWN AND DESCRIBED HEREON IS TRUE AND CORRECT TO THE ACCURACY REQUIRED BY THE LEBANON COUNTY SUBDIVISION AND LAND DEVELOPMENT ORDINANCE.

____________, 20___ * ______________________

COMMONWEALTH OF PENNSYLVANIA — REGISTERED PROFESSIONAL — KIM W. GRAYBILL — ENGINEER — No. 043728 E

STORM WATER MANAGEMENT PLAN CERTIFICATION:

I HEREBY CERTIFY THAT, TO THE BEST OF MY KNOWLEDGE, THE STORM WATER DRAINAGE FACILITIES SHOWN AND DESCRIBED HEREON ARE DESIGNED IN CONFORMANCE WITH THE STORM WATER MANAGEMENT REQUIREMENTS OF LEBANON COUNTY.

____________, 20___ * ______________________

COMMONWEALTH OF PENNSYLVANIA — REGISTERED PROFESSIONAL — KIM W. GRAYBILL — ENGINEER — No. 043728 E

CARBONATE GEOLOGY STATEMENT:

I, ____,
CERTIFY THAT THE PROPOSED DETENTION BASINS ARE NOT UNDERLAIN BY LIMESTONE.

COMMONWEALTH OF PENNSYLVANIA — REGISTERED PROFESSIONAL — KIM W. GRAYBILL — ENGINEER — No. 043728 E

CERTIFICATE OF OWNERSHIP, ACKNOWLEDGMENT OF PLAN AND OFFER OF DEDICATION:

COMMONWEALTH OF PENNSYLVANIA – COUNTY OF LEBANON

CORPORATION:

ON THIS THE _____ DAY OF _______________, 20___, BEFORE ME, THE UNDERSIGNED OFFICER, PERSONALLY APPEARED CLIFF WEAVER, BEING

_____________ OF LANDMARK HOMES AT SWEETBRIAR, WHO BEING DULY SWORN ACCORDING TO LAW, DEPOSES AND SAYS THAT THE CORPORATION IS THE OWNER OF THE PROPERTY SHOWN ON THIS PLAN, THAT HE IS AUTHORIZED TO EXECUTE SAID PLAN ON BEHALF OF THE CORPORATION, THAT THE PLAN IS THE ACT AND DEED OF THE CORPORATION, THAT THE CORPORATION DESIRES THE SAME TO BE RECORDED AND ON BEHALF OF THE CORPORATION FURTHER ACKNOWLEDGES THAT ALL STREETS AND OTHER PROPERTY IDENTIFIED AS PROPOSED PUBLIC PROPERTY (EXCEPTING THOSE AREAS LABELED "NOT FOR DEDICATION") ARE HEREBY DEDICATED TO THE PUBLIC USE.

____

IN WITNESS WHEREOF, I HEREUNTO SET MY HAND AND OFFICIAL SEAL.

____
NOTARY PUBLIC

MY COMMISSION EXPIRES ____________.
(NOTARY SEAL)

THE PURPOSE OF THIS PLAN IS TO SUBDIVIDE PHASE 4 (58 SINGLE–FAMILY DETACHED RESIDENTIAL LOTS) OF THE CROSSINGS AT SWEET BRIAR, WHICH INCLUDES THE INTENDED DEDICATION OF PUBLIC STREETS, & TO REVISE THE PHASE 3 SUBDIVISION OF OPEN SPACE TRACT 'C' OF THE CROSSINGS AT SWEET BRIAR INTO 2 SEPARATE OPEN SPACE TRACTS. ALSO, A REVISION TO A DRAINAGE EASEMENT IS BEING MADE WITHIN OPEN SPACE TRACT 'C'. SEE SHEET 5 FOR REVISED PHASE 3 OPEN SPACE LAYOUT PLAN & SEE SHEET 18 FOR THE REVISED PHASE 3 OPEN SPACE EASEMENT PLAN.

ACT 187 UNDERGROUND UTILITY PROTECTION ACT

HERSHEY SURVEYING, INC. HEREBY STATES THAT, PURSUANT TO THE PROVISIONS OF ACT NO. 287 OF 1974, AS AMENDED BY ACT 187 OF 1996, OF THE PENNSYLVANIA LEGISLATURE, IT HAS PERFORMED THE FOLLOWING IN PREPARING THESE DRAWINGS REQUIRING EXCAVATION OR DEMOLITION WORK AT SITES WITHIN THE POLITICAL SUBDIVISION(S) SHOWN ON THE DRAWINGS:

1. PURSUANT TO SECTION 4, CLAUSE (2) OF SAID ACT, HERSHEY SURVEYING, INC. REQUESTED FROM EACH USER'S OFFICE DESIGNATED ON SUCH LIST PROVIDED BY THE ONE CALL SYSTEM NOTIFICATION, THE INFORMATION PRESCRIBED BY SECTION 2, CLAUSE (4) OF SAID ACT, NOT LESS THAN (10) NOR MORE THAN (90) WORKING DAYS BEFORE FINAL DESIGN IS TO BE COMPLETED.
2. PURSUANT TO SECTION 4, CLAUSE (5) OF SAID ACT, HERSHEY SURVEYING, INC. HAS MET THEIR OBLIGATIONS OF CLAUSE (2) BY CALLING THE ONE CALL SYSTEM SERVING THE LOCATION WHERE EXCAVATION IS TO BE PERFORMED.
3. PURSUANT TO SECTION 4, CLAUSE (3) OF SAID ACT, HERSHEY SURVEYING, INC. HAS SHOWN UPON THESE DRAWINGS "THE POSITION AND TYPE OF EACH LINE, AS DERIVED PURSUANT TO THE REQUEST MADE AS REQUIRED BY CLAUSE (2), THE SERIAL NUMBER PROVIDED BY THE ONE CALL SYSTEM, THE TOLL–FREE ONE CALL SYSTEM PHONE NUMBER, AND THE NAME OF THE USER, THE USER'S DESIGNATED OFFICE ADDRESS AND PHONE NUMBER AS SHOWN ON THE LIST REFERRED TO IN SECTION 4, CLAUSE (5) OF SAID ACT."

AND HERSHEY SURVEYING, INC. DOES NOT MAKE ANY REPRESENTATION, WARRANTY, ASSURANCE OR GUARANTEE THAT THE INFORMATION RECEIVED PURSUANT TO SAID REQUEST AND AS REFLECTED ON THESE DRAWINGS IS CORRECT OR ACCURATE, BUT HERSHEY SURVEYING, INC. IS REFLECTING SAID INFORMATION ON THESE DRAWINGS ONLY DUE TO THE REQUIREMENTS OF THE SAID ACT NO. 187 OF DECEMBER 19, 1996.

ONE CALL SYSTEM SERIAL NO. NOTIFICATION BY HERSHEY SURVEYING, INC.

SERIAL NUMBER:
20220380865 – PHASE 4 (2/7/22)

PA 1 CALL SYSTEM, INC.
1-800-242-1776

CALL BEFORE YOU DIG!
PENNSYLVANIA LAW REQUIRES (3) WORKING DAYS NOTICE FOR CONSTRUCTION PHASE AND (10) WORKING DAYS IN DESIGN STAGE - STOP CALL

ACT 187 UTILITIES RESPONDENTS

BUCKEYE PARTNERS
THE BUCKEYE BUILDING
6161 HAMILTON BOULEVARD
ALLENTOWN, PA 18106
CONTACT: DAVE JONES
PHONE: 1–610–904–4000
E–MAIL: DAJONES@BUCKEYE.COM

COMCAST CABLE LEBANON
C/O USIC LOCATING SERVICES INC.
13085 HAMILTON CROSSING
BOULEVARD, SUITE 200
CARMEL, IN 46032
CONTACT: USIC OFFICE PERSONNEL
PHONE: 1–717–273–8264

MET–ED CO/FIRST ENERGY
2800 POTTSVILLE PIKE
READING, PA 19605
CONTACT: LEAH PAPSUN
PHONE: 1–888–544–4877
E–MAIL:
LPAPSUN@FIRSTENERGYCORP.COM

CITY OF LEBANON AUTHORITY
2311 RIDGEVIEW ROAD
LEBANON, PA 17042
CONTACT: BOB SENTZ
E–MAIL:
BSENTZ@LEBANONAUTHORITY.ORG
PHONE: 1–717–272–2841

NORTH LEBANON TOWNSHIP
725 KIMMERLINGS ROAD
LEBANON, PA 17046
CONTACT:
OFFICE PERSONNEL (ERIKA, MOLLY, OR THERESA)
PHONE: 1–717–273–7132
E–MAIL:
ESHEIBLEY@NORTHLEBANONTWPPA.GOV

UGI UTILITIES INC.
1301 A I P DR.
MIDDLETOWN, PA 17057
CONTACT: STEPHEN BATEMAN
PHONE: 1–717–255–4347
EMAIL: SBATEMAN@UGI.COM

VERIZON PENNSYLVANIA LLC
1026 HAY ST.
PITTSBURGH, PA 15221
CONTACT: DEBORAH BARUM
E–MAIL:
DEBORAH.D.DELIA@VERIZON.COM
PHONE: 1–717–777–4288

WINDSTREAM
1450 CENTER POINT ROAD
HIAWATHA, IA 52233
CONTACT: LOCATE DESK PERSONNEL
PHONE: 1–800–347–1991
E–MAIL:
LOCATE.DESK@WINDSTREAM.COM

THE CROSSINGS AT SWEET BRIAR LOT ADDRESSES

LOT #60 – 500 BELLA MAY CIRCLE LEBANON, PA 17046
LOT #61 – 502 BELLA MAY CIRCLE LEBANON, PA 17046
LOT #62 – 504 BELLA MAY CIRCLE LEBANON, PA 17046
LOT #63 – 506 BELLA MAY CIRCLE LEBANON, PA 17046
LOT #64 – 508 BELLA MAY CIRCLE LEBANON, PA 17046
LOT #65 – 510 BELLA MAY CIRCLE LEBANON, PA 17046
LOT #66 – 512 BELLA MAY CIRCLE LEBANON, PA 17046
LOT #67 – 525 BELLA MAY CIRCLE LEBANON, PA 17046
LOT #68 – 523 BELLA MAY CIRCLE LEBANON, PA 17046
LOT #69 – 521 BELLA MAY CIRCLE LEBANON, PA 17046
LOT #70 – 519 BELLA MAY CIRCLE LEBANON, PA 17046
LOT #71 – 536 BELLA MAY CIRCLE LEBANON, PA 17046
LOT #72 – 538 BELLA MAY CIRCLE LEBANON, PA 17046
LOT #73 – 540 BELLA MAY CIRCLE LEBANON, PA 17046
LOT #74 – 542 BELLA MAY CIRCLE LEBANON, PA 17046
LOT #75 – 544 BELLA MAY CIRCLE LEBANON, PA 17046
LOT #76 – 546 BELLA MAY CIRCLE LEBANON, PA 17046
LOT #77 – 548 BELLA MAY CIRCLE LEBANON, PA 17046
LOT #78 – 550 BELLA MAY CIRCLE LEBANON, PA 17046
LOT #79 – 552 BELLA MAY CIRCLE LEBANON, PA 17046
LOT #80 – 554 BELLA MAY CIRCLE LEBANON, PA 17046
LOT #81 – 556 BELLA MAY CIRCLE LEBANON, PA 17046
LOT #82 – 558 BELLA MAY CIRCLE LEBANON, PA 17046
LOT #83 – 560 BELLA MAY CIRCLE LEBANON, PA 17046
LOT #84 – 562 BELLA MAY CIRCLE LEBANON, PA 17046
LOT #85 – 564 BELLA MAY CIRCLE LEBANON, PA 17046
LOT #86 – 566 BELLA MAY CIRCLE LEBANON, PA 17046
LOT #87 – 565 BELLA MAY CIRCLE LEBANON, PA 17046
LOT #88 – 563 BELLA MAY CIRCLE LEBANON, PA 17046
LOT #89 – 561 BELLA MAY CIRCLE LEBANON, PA 17046
LOT #90 – 559 BELLA MAY CIRCLE LEBANON, PA 17046
LOT #91 – 557 BELLA MAY CIRCLE LEBANON, PA 17046
LOT #92 – 553 BELLA MAY CIRCLE LEBANON, PA 17046
LOT #93 – 551 BELLA MAY CIRCLE LEBANON, PA 17046
LOT #94 – 547 BELLA MAY CIRCLE LEBANON, PA 17046
LOT #95 – 618 LILLIANA DRIVE LEBANON, PA 17046
LOT #96 – 537 BELLA MAY CIRCLE LEBANON, PA 17046
LOT #97 – 527 BELLA MAY CIRCLE LEBANON, PA 17046
LOT #98 – 517 BELLA MAY CIRCLE LEBANON, PA 17046
LOT #99 – 515 BELLA MAY CIRCLE LEBANON, PA 17046
LOT #100 – 511 BELLA MAY CIRCLE LEBANON, PA 17046
LOT #101 – 602 LILLIANA DRIVE LEBANON, PA 17046
LOT #102 – 604 LILLIANA DRIVE LEBANON, PA 17046
LOT #103 – 606 LILLIANA DRIVE LEBANON, PA 17046
LOT #104 – 608 LILLIANA DRIVE LEBANON, PA 17046
LOT #105 – 610 LILLIANA DRIVE LEBANON, PA 17046
LOT #106 – 612 LILLIANA DRIVE LEBANON, PA 17046
LOT #107 – 614 LILLIANA DRIVE LEBANON, PA 17046
LOT #108 – 616 LILLIANA DRIVE LEBANON, PA 17046
LOT #109 – 617 LILLIANA DRIVE LEBANON, PA 17046
LOT #110 – 615 LILLIANA DRIVE LEBANON, PA 17046
LOT #111 – 613 LILLIANA DRIVE LEBANON, PA 17046
LOT #112 – 611 LILLIANA DRIVE LEBANON, PA 17046
LOT #113 – 609 LILLIANA DRIVE LEBANON, PA 17046
LOT #114 – 607 LILLIANA DRIVE LEBANON, PA 17046
LOT #115 – 605 LILLIANA DRIVE LEBANON, PA 17046
LOT #116 – 503 BELLA MAY CIRCLE LEBANON, PA 17046
LOT #117 – 501 BELLA MAY CIRCLE LEBANON, PA 17046

ASSOCIATED PLAN APPROVALS

PERMIT TYPE	DATE ISSUED	RECORDING INFO.
CONDITIONAL USE	AUG. 18, 2008	N/A
PRELIMINARY PLAN	MAY 24, 2010	N/A
PHASE 1 FINAL PLAN	OCT. 15, 2012	PLAN BK. 77 PAGE 52
PHASE 2 FINAL PLAN	JULY 25, 2017	PLAN BK. 87 PAGE 89
PHASE 3 FINAL PLAN	AUG. 6, 2020	PLAN BK. 95 PAGE 1

PERMITS REQUIRED/ISSUED

PERMIT TYPE	CASE #/APP. #	DATE ISSUED	EXPIRATION DATE
NPDES	PAC380128	JUNE 13, 2014	AUG. 11, 2024
PLANNING MODULE EXEMPTION (TO DEP)	DEP CODE NO. A3–38917–274–3E	APRIL 16, 2008	N/A

ASSOCIATED REPORTS/DOCUMENTS

PERMIT TYPE	PREPARED BY	REVISED BY	LAST REVISED
WETLANDS DELINEATION REPORT	LIBERTY ENVIRONMENTAL, INC.	N/A	N/A
PCSM PLAN	STACKHOUSE BENSINGER, INC.	PIONEER MANAGEMENT, LLC	FEB. 1, 2022
E&S PLAN	STACKHOUSE BENSINGER, INC.	PIONEER MANAGEMENT, LLC	FEB. 1, 2022
PHASE 4 STORMWATER MANAGEMENT REPORT	PIONEER MANAGEMENT, LLC	N/A	APRIL 25, 2022
TRAFFIC IMPACT STUDY	TRAFFIC PLANNING & DESIGN	MAY 7, 2008	NOV. 7, 2008

ZONING DATA

R–2 (HIGH DENSITY RESIDENTIAL DISTRICT) – ORDINANCE #3–2008
NON–CLUSTER: SINGLE–FAMILY DETACHED DWELLING REQUIREMENTS

MINIMUM LOT AREA	9,000 S.F.
MINIMUM LOT WIDTH	85'
MINIMUM FRONT YARD BLDG. SETBACK	30'
MINIMUM SIDE YARD BLDG. SETBACK	10' ON ONE SIDE 20' BOTH SIDES
MINIMUM REAR YARD BLDG. SETBACK	30'
MAXIMUM LOT COVERAGE	40%
MAXIMUM BLDG. HEIGHT	2–1/2 STORIES OR 30'

ZONING DATA

R–2 (HIGH DENSITY RESIDENTIAL DISTRICT) – ORDINANCE #3–2008
CLUSTER: SINGLE–FAMILY DETACHED DWELLING REQUIREMENTS

MINIMUM LOT AREA	7,000 S.F.
MINIMUM LOT WIDTH	65'
MINIMUM FRONT YARD BLDG. SETBACK	25'
MINIMUM SIDE YARD BLDG. SETBACK	7.5' ON EACH SIDE
MINIMUM REAR YARD BLDG. SETBACK	25'
MAXIMUM LOT COVERAGE	50%
MAXIMUM BLDG. HEIGHT	2–1/2 STORIES OR 35'

ARD DENSITY REQUIREMENT

MAXIMUM DENSITY — 6 DWELLING UNITS PER GROSS ACRE

BMP – LATITUDE & LONGITUDE CHART (PH. 4)

BMP –	LATITUDE	LATITUDE
CONSTRUCTED WETLAND BASIN #5 –	N40.36765	W76.39929
INFILTRATION BASIN #11 –	N40.36660	W76.40169
VEGETATED SWALE #7 –	N40.36815	W76.40195
VEGETATED SWALE #8 –	N40.36726	W76.40341
VEGETATED SWALE #14A –	N40.36637	W76.40317
VEGETATED SWALE #14B –	N40.36625	W76.40259
VEGETATED SWALE #21 –	N40.36913	W76.40274
VEGETATED SWALE #92A –	N40.36720	W76.40188
VEGETATED SWALE #92B –	N40.36732	W76.40145
VEGETATED SWALE #99 –	N40.36758	W76.40088

SHEET INDEX

*SHEET 1 – COVER SHEET
*SHEET 2 – NOTES & CHARTS
*SHEET 3 – OVERALL EXISTING FEATURES & DEMOLITION PLAN
*SHEET 4 – OVERALL PHASING PLAN
*SHEET 5 – REVISED PHASE 3 OPEN SPACE LAYOUT PLAN
*SHEETS 6–8 – LAYOUT PLAN
*SHEETS 9–14 – EASEMENT PLAN
*SHEET 15 – EASEMENT PLAN – LINE & CURVE CHARTS
*SHEETS 16–18 – REVISED PHASE 3 OPEN SPACE EASEMENT PLAN
SHEETS 19–20 – LANDSCAPING, LIGHTING & SIGNAGE PLAN
SHEET 21 – OVERALL GRADING PLAN
SHEETS 22–24 – GRADING PLAN
SHEETS 25–27 – UTILITY PLAN
SHEETS 28–30 – STORMWATER MANAGEMENT PLAN
SHEETS 31–32 – BELLA MAY CIRCLE PLAN & PROFILE
SHEET 33 – LILLIANA DRIVE PLAN & PROFILE
SHEET 34 – MISCELLANEOUS OVERLAND PROFILES
SHEETS 35–36 – SANITARY SEWER DETAILS
SHEETS 37–38 – WATERLINE DETAILS
SHEETS 39–40 – SITE CONSTRUCTION DETAILS
SHEETS 40A–40B – RETAINING WALL DESIGNS
SHEET 41 – STORMWATER DETAILS
*SHEET 42 – STORMWATER DETAILS
SHEET 43 – STORMWATER DETAILS

*DENOTES PLAN SHEETS TO BE RECORDED

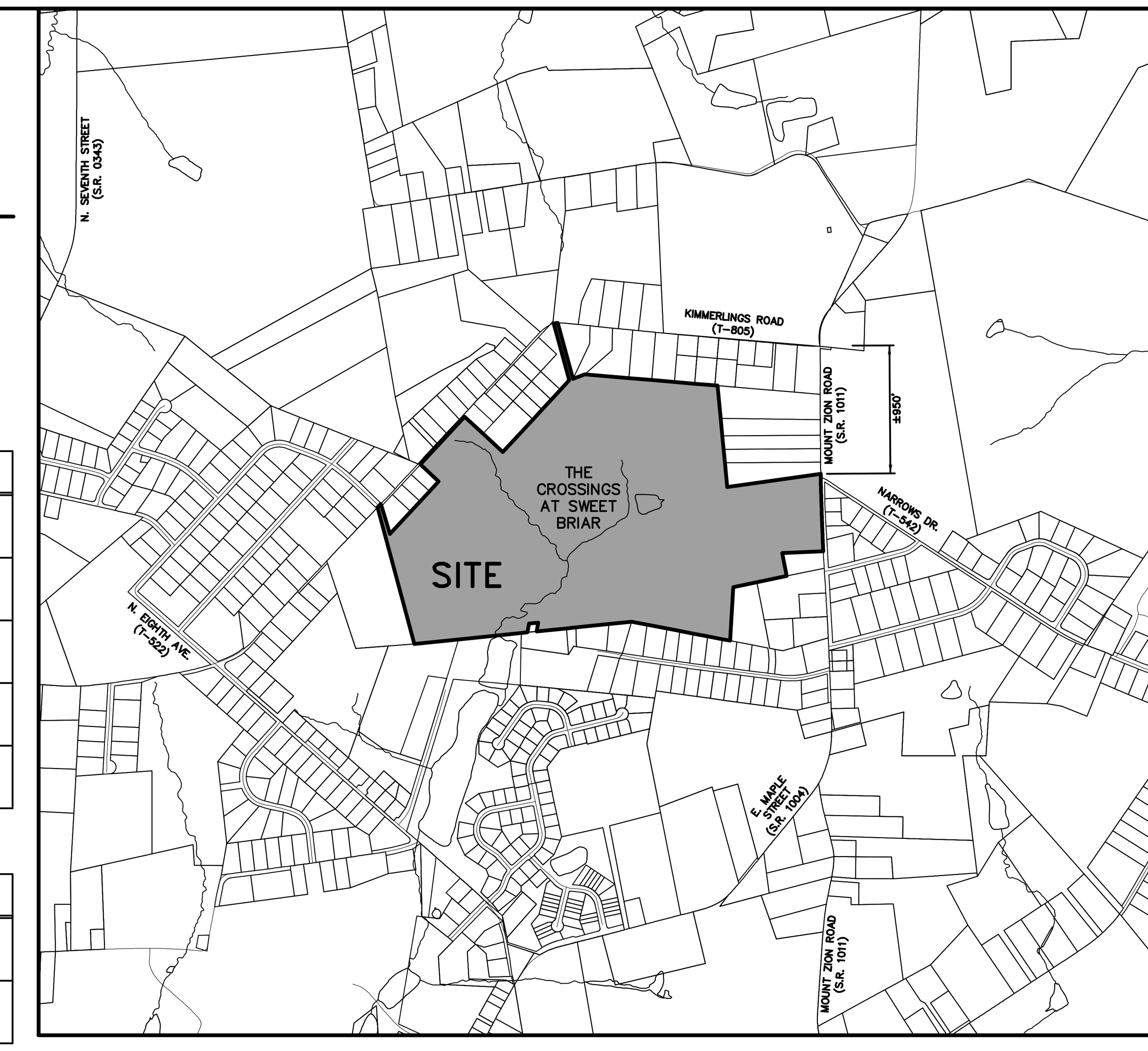

SITE LOCATION MAP
SCALE 1"=1000'
0' 500' 1000' 2000' 3000' 4000'

OWNER DATA
LANDMARK HOMES AT SWEETBRIAR
C/O MR. CLIFF WEAVER
1737 WEST MAIN STREET
EPHRATA, PA 17522
PHONE: (717) 733–1536

INST.
INST. # 201306430

TAX PARCEL
27–2345156–379802–0000
27–2346281–380096–0000

DEED BK/PG
BOOK 2185, PAGE 945–957

SITE ADDRESS
941 MOUNT ZION ROAD
LEBANON, PA 17046
PHONE: (717) 272–9973

SITE DATA (OVERALL DEVELOPMENT)

GROSS SITE ACREAGE:	103.027 ACRES
ZONING:	R–1 (LOW DENSITY RESIDENTIAL) – ORDINANCE #3–2008 R–2 (HIGH DENSITY RESIDENTIAL) C–1 (NEIGHBORHOOD COMMERCIAL)
PROPOSED SEWER SERVICE:	PUBLIC
PROPOSED WATER SERVICE:	PUBLIC
PROPOSED USE:	RESIDENTIAL & COMMERCIAL
PROPOSED LOTS:	199 RESIDENTIAL BUILDING LOTS, 3 COMMERCIAL LOTS & 7 OPEN SPACE TRACTS ('A' – 'G') = 209 TOTAL LOTS
TOTAL PROPOSED DWELLING UNITS:	199 DWELLING UNITS
PROPOSED GROSS BASE DENSITY:	1.932 UNITS/ACRE
PROPOSED OPEN SPACE LOTS:	7 OPEN SPACE TRACTS ('A' – 'G') (HOA OWNED)
PROPOSED OPEN SPACE AREA:	27.672 ACRES (HOA OWNED LAND)(REVISED AS A PART OF THIS PLAN) (EXCLUDES COMMUNITY BUILDING LOT WHICH IS CONSIDERED A COMMERCIAL LOT)
PROPOSED OPEN SPACE PERCENTAGE:	26.86% (HOA OWNED OPEN SPACE LAND)(REVISED AS A PART OF THIS PLAN)
AREA OF NEIGHBORHOOD COMMERCIAL DISTRICT:	±9.110 ACRES
AREA OF WETLAND:	±8.986 ACRES (AFTER IMPROVEMENTS INCLUDING MITIGATION AREA)
AREA OF WETLAND BUFFER:	±5.711 ACRES (AFTER IMPROVEMENTS INCLUDING MITIGATION AREA)

APPLICABLE ZONING PER LOT (OVERALL DEVELOPMENT)

20% OF THE TOTAL NUMBER OF SINGLE–FAMILY DETACHED DWELLING UNITS MUST COMPLY WITH THE AREA BULK AND SETBACK REQUIREMENTS OF THE NON–CLUSTER DESIGN CRITERIA. TOTAL NON–CLUSTER LOTS PROVIDED= 40 (20%) (SEE BELOW:)

(4) R–1 NON–CLUSTER LOTS
123, 124, 125 & 126
(36) R–2 NON–CLUSTER LOTS
4–7, 53–60, 118–131, 140, 161–173
(3) C–1 LOTS
1, 2 & 3
(159) R–2 CLUSTER LOTS
ALL RESIDENTIAL LOTS NOT MENTIONED ABOVE

SITE DATA (PH. 4 ONLY)

PHASE 4 ACREAGE:	29.700 ACRES
ZONING:	R–2 (LOW DENSITY RESIDENTIAL) – ORDINANCE #3–2008
PROPOSED SEWER SERVICE:	PUBLIC
PROPOSED WATER SERVICE:	PUBLIC
PROPOSED USE:	RESIDENTIAL
PROPOSED LOTS:	58 RESIDENTIAL BUILDING LOTS & 3 OPEN SPACE TRACTS ('D', 'E' & 'F')
TOTAL PROPOSED PHASE 3 DWELLING UNITS:	58 DWELLING UNITS
PROPOSED OPEN SPACE LOTS:	3 PROPOSED OPEN SPACE TRACTS ('D', 'E' & 'F') (HOA OWNED)
PROPOSED OPEN SPACE AREA:	13.748 AC.
PROPOSED OPEN SPACE PERCENTAGE:	SEE OVERALL DEVELOPMENT SITE DATA
LENGTH OF PROPOSED PHASE 4 STREETS:	BELLA MAY CIRCLE = ±2,090 L.F. LILLIANA DRIVE = ±746 L.F. TOTAL LINEAL FEET OF STREET = ±2,836 L.F.

NO.	DATE	REVISION
2	4–25–22	REVISED PER NLT, LEB. CO. ENGINEER & CITY OF LEB. AUTHORITY
1	2–1–22	REVISED PER NLT, LEB. CO. ENGINEER, LCPD, NLTMA, & CITY OF LEB. AUTHORITY

FOR PIONEER MANAGEMENT BY:

SURV. CHIEF: RC	FIELDBOOK NO. VALUE
DRAWN BY: RC	CHKD BY: RC
MANAGER: JAMES C. HENKE	
DESIGN BY: JDB/KWG	CHKD BY: JDB/JCH

DRAWING REFERENCE: F:\12\12-0950-02\CAD\Final-Ph4\Cover.dwg

XREFS: TB [F:\12\12-0950-02\CAD\Final-Ph4\X-refs\TB.dwg]
Site Location [F:\12\12-0950-02\CAD\Final-Ph4\X-refs\Site Location.dwg]

CLIENT
LANDMARK HOMES AT SWEETBRIAR
c/o MR. CLIFF WEAVER
1737 WEST MAIN STREET
EPHRATA, PA 17522
(717) 733–1536

SCALE: AS NOTED

PIONEER Management, LLC
111 Millersville Road, Lancaster, PA 17603
Phone (717) 481–5500 · Fax (717) 481–4955
Email: jh@pioneermanagementllc.com
Website: www.pioneermanagementllc.com

COVER SHEET
FINAL PHASE 4 & REVISED FINAL PHASE 3 SUBDIVISION PLAN
FOR
THE CROSSINGS AT SWEET BRIAR
NORTH LEBANON TOWNSHIP — LEBANON COUNTY, PA

DATE: JUNE 25, 2021
SHEET NO. 1 OF 43
DWG. NO. 12–0950–02–F

F:\2021\0950-02\CAD\Final Plan Set\Cover.dwg, 6/7/2022 2:32:24 PM, 1:1

GENERAL NOTES CONTINUED

4. UNDERGROUND UTILITY LOCATIONS ARE APPROXIMATE AND WERE DETERMINED FROM VISIBLE LOCATION, PA ONE CALL UTILITY RESPONSES AND/OR BEST AVAILABLE PLAN INFORMATION. HERSHEY SURVEYING, INC. CANNOT GUARANTEE THE EXACT LOCATION OF ANY UNDERGROUND UTILITIES OR STRUCTURES. AN EXACT LOCATION CAN ONLY BE OBTAINED BY SUBSURFACE EXPLORATION, WHICH IS NOT A PART OF THIS CONTRACT PERFORMANCE.
5. THE ZONING LINE INFORMATION IS TAKEN FROM THE NORTH LEBANON TOWNSHIP OFFICIAL ZONING MAP, LAST REVISION OF NOVEMBER 19, 2018.
6. PIONEER MANAGEMENT, LLC MAKES NO REPRESENTATION AS TO SUBSURFACE CONDITIONS ON THE PROJECT SITE (I.E. THE EXISTENCE OF OR LOCATION OF ROCK, WATER TABLE, ETC.).
7. THERE SHALL BE NO CHANGES OR DEVIATION FROM THESE PLANS UNLESS APPROVED BY THE ENGINEER. SUCH PLAN CHANGES, SHOULD THEY BECOME NECESSARY, ARE SUBJECT TO MUNICIPAL/COUNTY ORDINANCES AND MUNICIPAL/COUNTY APPROVALS.
8. DRILL HOLES SHALL BE MADE IN THE PROPOSED CURB WHERE THE SIDE PROPERTY LINES WOULD INTERSECT WHEN EXTENDED WITHIN THE STREET RIGHT-OF-WAYS AND IRON PINS AT ALL OTHER PROPERTY CORNERS.
9. CONCRETE MONUMENTS SHALL BE SET WHERE SHOWN ON THE LAYOUT PLANS AND INDICATING MARKERS TO BE SET UPON RECORDING, SUBJECT TO THE APPROVAL OF THE LEBANON COUNTY ENGINEER, TO GIVE FULL SURVEYING CONTROL OF EACH BLOCK, LOT AND ALL AREAS OF PROPOSED DEDICATION OR PUBLIC EASEMENT.
10. MONUMENTS SHALL NOT BE PLACED IN THE GROUND UNTIL FINAL GRADING IS COMPLETE.
11. STREET MONUMENTS TO BE PLACED FOLLOWING FINAL SITE GRADING. ALL CONCRETE MONUMENTS MUST BE PLACED AT THE RIGHT-OR-WAY LINES PER NORTH LEBANON TOWNSHIP AND LEBANON COUNTY REQUIREMENTS.
12. ALL APPLICABLE LOT CORNER MARKERS SHALL BE SET UPON FINAL APPROVAL AND GRADING OF THIS PLAN.
13. CLEAR SIGHT TRIANGLES SHALL BE KEPT CLEAR AND MAINTAINED FREE OF OBSTRUCTIONS TO VISION AND NO PERSON SHALL PLACE, PLANT, DEPOSIT OR PERMIT THE PLACEMENT, PLANTING OR DEPOSIT OF ANY MATERIAL, BRUSH, FENCE, TREE, SHRUB OR OTHER OBSTRUCTION. ALL STREET INTERSECTIONS CREATED BY THIS DEVELOPMENT SHALL PROVIDE A CLEAR SIGHT TRIANGLE MEASURED 75 FEET FROM THE POINT OF INTERSECTION OF THE CENTERLINES OF THE INTERSECTING STREETS. NO BUILDING, STRUCTURE, PLANTING OR OTHER OBSTRUCTION HIGHER THAN 30" ABOVE THE ROADWAY GRADE AND BELOW 10' SHALL BE PERMITTED WITHIN THE CLEAR SIGHT TRIANGLE. REFER TO HOMEOWNER'S ASSOCIATION DOCUMENTS.
14. NOTHING SHALL BE PLACED, PLANTED, SET OR PUT WITHIN AN AREA OF AN EASEMENT THAT WOULD ADVERSELY AFFECT THE FUNCTION OF THE EASEMENT.
15. ANY DRAINAGE AND UTILITY EASEMENTS SHOWN ON THE PLAN SHALL BE OWNED AND MAINTAINED IN ACCORDANCE WITH THE APPROVED PLAN AND SHALL BE REFERENCED WITHIN THE PROPERTY DEED.
16. A MINIMUM 20' WIDE EASEMENT SHALL BE PROVIDED FOR WATERLINES OUTSIDE THE PUBLIC STREET SYSTEM. A MINIMUM 30' WIDE EASEMENT SHALL BE PROVIDED FOR SANITARY SEWER PIPES OUTSIDE THE PUBLIC STREET SYSTEM. NO STRUCTURE OR BUILDINGS SHALL BE ERECTED WITHIN SUCH EASEMENTS.
17. THERE SHALL BE A VARIABLE EASEMENT WIDTH ESTABLISHED FOR THE PROPOSED SANITARY SEWER AND WATER SYSTEMS CONFORMING TO THE RIGHT-OF-WAY OF THE PUBLIC STREETS.
18. A 10' WIDE EASEMENT IS PROVIDED FOR THE 5' WIDE PAVED PEDESTRIAN PATHWAY. THIS PATHWAY IS NOT INTENDED FOR BICYCLE USE.
19. ANY NON-COMMON AREA LOT CONTAINING AN EASEMENT SHALL REFERENCE THAT EASEMENT ON THE RECORDED DEED FOR THE PROSPECTIVE LOT OWNER.
20. NO CONSTRUCTION OR DISTURBANCE IS ALLOWED IN THE CONSERVATION EASEMENT AREA OR WETLAND AREAS UNTIL SUCH TIME AS ALL THE NECESSARY PERMITS AND APPROVALS ARE OBTAINED.
21. ALL SIGNS SHALL BE IN ACCORDANCE WITH TITLE 67, CHAPTER 211, OFFICIAL TRAFFIC CONTROL DEVICES (PENNDOT PUB. 68) AND THE ZONING ORDINANCE OF NORTH LEBANON TOWNSHIP.
22. REGULATORY STOP SIGNS SHALL BE PROVIDED AT APPROPRIATE INTERSECTIONS.
23. ALL PROPOSED STREETS SHALL BE POSTED WITH 25 MPH SPEED LIMIT SIGNS.
24. IT SHALL BE THE RESPONSIBILITY OF THE DEVELOPER FOR THE INSTALLATION AND COST OF ALL STREET SIGNS.
25. WHENEVER THE NOTES ON THIS PLAN REFER TO A HOMEOWNER'S ASSOCIATION, SUCH TERM SHALL MEAN AND INCLUDE A MASTER ASSOCIATION, A HOMEOWNER'S ASSOCIATION UNDER THE PENNSYLVANIA UNIFORM PLANNED COMMUNITY ACT AND/OR A UNIT OWNERS' ASSOCIATION UNDER THE PENNSYLVANIA UNIFORM CONDOMINIUM ACT.
26. STREET LIGHTING LOCATION WILL BE COORDINATED WITH THE LOCAL UTILITY COMPANY. PROPOSED LIGHTING SHALL COMPLY WITH MET-ED SPECIFICATIONS. THE LOCATIONS SHOWN ON PRELIMINARY PLANS FOR STREET LIGHTING ARE PROPOSED AND SUBJECT TO CHANGE BY THE TOWNSHIP AND/OR MET-ED WHEN THE ACTUAL DESIGN PLAN IS SUBMITTED TO THE TOWNSHIP FOR AUTHORIZING MET-ED TO PROCEED.
27. THE CONTRACTOR IS RESPONSIBLE FOR $2,000(OR CURRENT RATE)/EACH STREETLIGHT (GPU WILL INVOICE THE TOWNSHIP AND THE TOWNSHIP WILL INVOICE THE DEVELOPER).
28. THE OWNERSHIP AND MAINTENANCE OF THE OPEN SPACE SHALL BE THE RESPONSIBILITY OF THE HOMEOWNER'S ASSOCIATION.
29. HYDRIC SOILS PRESENTED WITHIN THIS TRACT ARE COMLY SILT LOAM.
30. THERE ARE NO APPARENT SINKHOLES ON THIS TRACT.
31. THERE IS NO FLOODPLAIN ON THIS SITE ACCORDING TO THE NORTH LEBANON TOWNSHIP ZONING MAP AND FIRM PANEL NUMBER 42075C0257E, EFFECTIVE DATE: JULY 8, 2020.
32. WHEREVER POSSIBLE, NATURAL FEATURES OF THE SITE SUCH AS LARGE TREES, WOODED AREAS AND NATURAL WATER COURSES AND BODIES OF WATER SHALL BE PRESERVED DURING CONSTRUCTION.
33. ALL LOTS SHALL ACCESS THE INTERNAL PUBLIC STREET SYSTEM.
34. THE PROPOSED ROADWAY SYSTEM WILL BE PUBLIC STREETS AND ARE INTENDED TO BE DEDICATED TO THE TOWNSHIP.
35. PROPOSED DRIVEWAYS AND HOUSE LOCATIONS SHOWN HEREON ARE FOR DEMONSTRATION PURPOSES ONLY. THE FINAL LOCATION MUST BE APPROVED BY THE DEVELOPER AND MEET TOWNSHIP SPECIFICATIONS AT THE TIME OF CONSTRUCTION ON THE INDIVIDUAL LOTS. ALL DRIVEWAY PERMITS TO BE APPROVED FROM THE TOWNSHIP AND NO DRIVEWAY SHALL BE LOCATED AT A STORMWATER INLET OR WITHIN ANY EASEMENT. A DRIVEWAY PERMIT WILL BE REQUIRED FOR EACH LOT.
36. ALL DRIVEWAYS SHALL BE DESIGNED AND CONSTRUCTED TO THE STANDARDS OF NORTH LEBANON TOWNSHIP.
37. THERE SHALL BE 2 OFF-STREET PARKING SPACES PROVIDED FOR EACH SINGLE-FAMILY LOT.
38. THE GRADING OF ALL LOTS SHALL BE FOR GENERAL GRADING PURPOSES ONLY. ANY DEVIATION MUST ENSURE POSITIVE DRAINAGE FROM THE PROPOSED DWELLING. INDIVIDUAL LOT OWNERS ARE PROHIBITED FROM THE PLACEMENT OF ANY STRUCTURE, VEGETATION OR OTHER SURFACE WATER OBSTRUCTION IN ANY MANNER THAT WOULD IMPEDE OR REDIRECT STORM WATER DISCHARGING FROM THE LOTS INTO A PATTERN DIFFERING FROM THAT INDICATED ON THE GRADING PLANS.
39. ALL CONSTRUCTION SHALL BE SUBJECT TO THE REQUIREMENTS OF THE PENNSYLVANIA UNIFORM CONSTRUCTION CODE, AS ADOPTED BY THE MUNICIPALITY.
40. TOWNSHIP AND COUNTY OFFICIALS AND THEIR AGENTS OR EMPLOYEES HAVE THE RIGHT OF ACCESS FOR INSPECTION, AND IN CASES OF CONSTRUCTION DEFAULT, CONSTRUCTION OF THE STORM WATER MANAGEMENT FACILITIES.
41. ALL LOTS WITH DWELLING UNITS SHALL BE FEE-SIMPLE TRANSFERS.
42. PERMITS FROM THE TOWNSHIP MUST BE OBTAINED PRIOR TO ANY WORK IN THE TOWNSHIP RIGHT-OF-WAY.
43. SOLID WASTE STORAGE AND DISPOSAL SHALL BE THE RESPONSIBILITY OF THE INDIVIDUAL LOT OWNER.
44. IF UNFORESEEN SUBSURFACE OR GEOLOGIC CONDITIONS ARE ENCOUNTERED, INCLUDING BUT NOT LIMITED TO DUMPS, FOUNDATIONS, ARCHAEOLOGICAL ARTIFACTS OR FEATURES, SPRINGS, ROCK SINKHOLES, ETC., THE CONTRACTOR SHALL STOP WORK IMMEDIATELY AND NOTIFY PIONEER MANAGEMENT, LLC AND THE OWNER.
45. THE DEVELOPER SHALL BE FINANCIALLY RESPONSIBLE FOR ANY ATTORNEY FEES WHERE THE ATTORNEY IS ENGAGED ON BEHALF OF THE TOWNSHIP/AUTHORITY RELATING TO THE REVIEW OF THE SUBDIVISION PLANS OR LAND DEVELOPMENT PLANS THAT ARE SUBMITTED TO THE TOWNSHIP/AUTHORITY. THESE FEES ARE IN ADDITION TO SUBMISSION FEES CHARGED BY THE TOWNSHIP/AUTHORITY. PAYMENT OF ALL INVOICES IS DUE AND PAYABLE WITHIN 30 DAYS OF RECEIPT BUT IN ALL CASES PRIOR TO PLAN APPROVAL BY THE BOARD OF SUPERVISORS. ANY QUESTIONS ON INVOICES MUST BE REPORTED TO THE TOWNSHIP/AUTHORITY IN WRITING WITHIN 10 DAYS OF RECEIPT OF THE BILL.
46. AT A ZONING HEARING MEETING HELD AT NORTH LEBANON TOWNSHIP ON FEBRUARY 18, 2008, A SECTION OF R1 ZONING LOCATED ON THE NORTHWEST SECTION OF THE SITE WAS APPROVED FOR REZONING FROM R1 TO R2 ZONING.
47. ORDINANCE NO. 3-2008 FOR THE CONDITIONAL USE OF AGE RESTRICTED HOUSING DEVELOPMENTS WITHIN THE R-2 DISTRICT, WAS ADOPTED AT A NORTH LEBANON TOWNSHIP MEETING HELD ON MAY 19, 2008.
48. BASED UPON THE TRAFFIC IMPACT STUDY DATED MAY 7, 2008 AND SUPPLEMENT DATED NOVEMBER 7, 2008, THE APPLICANT HAS AGREED TO CONTRIBUTE A SUM OF $5,000.00 TO PARTIALLY FUND IMPROVEMENTS AT THE INTERSECTION OF ROUTE 343 AND KIMMERLINGS ROAD. THIS SUM WILL BE DUE WHEN THE FINAL PLAN IS SUBMITTED FOR PHASE 4 OF THE DEVELOPMENT.
49. WHERE NECESSARY FOR MAINTENANCE PURPOSES, PROVIDE GROUND COVER PLANTINGS ON SLOPES OF 2:1 OR GREATER. SEE SHEET 43 FOR GROUND COVER MIX (ERNMX-181 SEEDING) THAT CAN BE USED.
50. AT A MEETING HELD ON MAY 16, 2011 THE BOARD OF SUPERVISORS APPROVED THE PATHWAYS, STREETS, AND SIDEWALKS CONFIGURATION AS REFLECTED ON THE APPROVED PRELIMINARY PLAN SET.
51. CONTRACTOR SHALL NOTIFY THE AUTHORITY PRIOR TO PLACING AND COMPACTING FILL. THE CONTRACTOR SHALL CONDUCT COMPACTION TESTS UPON REQUEST BY THE AUTHORITY.
52. BONDING WILL BE REQUIRED FOR THE CONNECTION TO THE SANITARY SEWER. BONDING IS ALSO REQUIRED FOR THE CONNECTION TO THE PUBLIC WATER. BONDING FOR BOTH WATER AND SANITARY SEWER SHALL BE HELD BY THE NORTH LEBANON TOWNSHIP MUNICIPAL AUTHORITY.
53. A PRE-CONSTRUCTION MEETING WITH THE TOWNSHIP ROADMASTER, THE LEBANON COUNTY CONSERVATION DISTRICT AND THE LEBANON COUNTY ENGINEER IS REQUIRED PRIOR TO COMMENCEMENT OF WORK AND PLACEMENT OF CASH ESCROW WITH THE BOARD OF SUPERVISORS.
54. A DRIVEWAY PERMIT WILL BE REQUIRED FROM NORTH LEBANON TOWNSHIP.
55. A STREET CUT PERMIT AND BONDING WILL BE REQUIRED FROM NORTH LEBANON TOWNSHIP.
56. A PDF COPY OF THE APPROVED PCSM PLAN SHALL BE SUBMITTED TO THE TOWNSHIP.
57. AS-BUILT PLANS OF ALL STORMWATER MANAGEMENT BMPS AND AN EXPLANATION OF ANY DISCREPANCIES WITH THE CONSTRUCTION PLANS SHALL BE SUBMITTED TO NORTH LEBANON TOWNSHIP WITHIN 30 CALENDAR DAYS OF PROJECT COMPLETION OR, IN THE CASE OF DEDICATED PUBLIC IMPROVEMENTS, PRIOR TO ACCEPTANCE OF THE IMPROVEMENTS BY THE TOWNSHIP. A PROFESSIONALLY SEALED AS-BUILT CONSTRUCTION REPORT, AND PLAN INCLUDING RELATIVE DATES, NAME(S) OF CONTRACTOR(S), METHODS OF CONSTRUCTION, AND VERIFICATION OF CONFORMANCE TO PLAN SPECIFICATIONS AND GOOD ENGINEERING PRACTICES SHALL BE PROVIDED TO THE LEBANON COUNTY PLANNING DEPARTMENT PRIOR TO BOND REDUCTION REQUESTS RELATED TO THE BASIN(S). THE AS-BUILT SUBMISSION SHALL INCLUDE A CERTIFICATION SIGNED BY A QUALIFIED PROFESSIONAL VERIFYING THAT ALL PERMANENT SWM BMPS HAVE BEEN CONSTRUCTED ACCORDING TO THE APPROVED PLANS AND SPECIFICATIONS. IF A LICENSED QUALIFIED PROFESSIONAL CONTRIBUTED TO THE AS-BUILT PLANS, THE THEY MUST SIGN THE COMPLETION CERTIFICATE. AFTER RECEIPT OF THE COMPLETION CERTIFICATE FROM THE APPLICANT'S QUALIFIED PROFESSIONAL, THE COUNTY ENGINEER MAY CONDUCT A FINAL INSPECTION.

UTILITY NOTES

1. ALL INLETS ARE TYPE C UNLESS OTHERWISE NOTED IN THE PROFILES.
2. ROOF DRAINS SHALL BE DIRECTED AWAY FROM STRUCTURES TO PREVENT INFILTRATION NEAR THE STRUCTURE FOUNDATION. THE OUTLETS SHALL HAVE POSITIVE DRAINAGE AWAY FROM THE STRUCTURE.
3. RUNOFF FROM THE LOT IMPROVEMENTS SHALL BE DIRECTED TO THE STORM WATER MANAGEMENT FACILITIES.
4. STORM WATER MANAGEMENT FACILITIES LOCATED BEYOND THE LIMITS OF THE PUBLIC STREET RIGHT-OF-WAYS SHALL BE OWNED AND MAINTAINED BY THE HOMEOWNER'S ASSOCIATION OR LOT OWNER, AS APPLICABLE. WHERE STORM WATER FACILITIES ARE LOCATED ENTIRELY ON HOMEOWNER'S ASSOCIATION LAND, IT SHALL BE THE HOMEOWNER'S ASSOCIATION'S RESPONSIBILITY TO OWN AND MAINTAIN THESE FACILITIES BOTH AS IT RELATES TO EVERYDAY MAINTENANCE AND LONG-TERM MAINTENANCE, INCLUDING ALL STRUCTURAL WORK. WHERE STORM WATER MANAGEMENT FACILITIES ARE LOCATED ON PRIVATELY OWNED LOTS, IT SHALL BE THE LOT OWNER'S RESPONSIBILITY TO OWN THESE FACILITIES AND PERFORM EVERYDAY MAINTENANCE (I.E. MOWING), HOWEVER, THE HOMEOWNER'S ASSOCIATION SHALL BE RESPONSIBLE FOR ALL STRUCTURAL REPAIRS AND REPLACEMENT OF THESE STORM WATER FACILITIES. ACCESS SHALL BE PROVIDED TO THE TOWNSHIP FOR THE PURPOSE OF INSPECTION. REFER TO HOMEOWNER'S ASSOCIATION DOCUMENTS FOR ADDITIONAL INFORMATION RELATED TO OWNERSHIP AND MAINTENANCE RESPONSIBILITIES.
5. THE LOT OWNER IS RESPONSIBLE FOR THE LONG TERM MAINTENANCE OF THE STREET TREE ON THEIR LOT AND THE HOMEOWNER'S ASSOCIATION IS RESPONSIBLE FOR STREET TREES LOCATED ON COMMON SPACE LOTS. REFER TO HOMEOWNER'S ASSOCIATION DOCUMENTS FOR ADDITIONAL INFORMATION RELATED TO OWNERSHIP AND MAINTENANCE RESPONSIBILITIES.
6. THE PROPOSED STORM SEWER PIPE LENGTHS ARE MEASURED FROM CENTER TO CENTER OF OF STRUCTURE, AND INCLUDE TOTAL LENGTH OF END SECTIONS, WHERE APPLICABLE. SANITARY SEWER PIPE LENGTHS ARE MEASURED FROM CENTER TO CENTER OF MANHOLES.
7. THE PROPOSED INFILTRATION FACILITIES RELY ON PERMEABLE SOIL CONDITIONS TO DEWATER AND FUNCTION PROPERLY. AS PART OF THE DESIGN PROCESS, SOIL, GEOLOGIC AND/OR INFILTRATION TESTING WAS CONDUCTED BY A QUALIFIED PROFESSIONAL, SOIL SCIENTIST OR LICENSED GEOLOGIST TO ASSURE THAT CONDITIONS WERE CONDUCIVE TO UTILIZE THIS TYPE OF FACILITY FOR STORMWATER MANAGEMENT CONTROL. EVERY PRECAUTION MUST BE MAINTAINED BY THE CONTRACTOR DURING THE CONSTRUCTION OF THE INFILTRATION FACILITY TO ASSURE THAT COMPACTION DOES NOT OCCUR WHICH WOULD COMPROMISE THE PERMEABILITY OF THE FLOOR OF THE INFILTRATION FACILITY. IF AFTER INSTALLATION, ANY INFILTRATION FACILITY DOES NOT FUNCTION AS DESIGNED, AND THE CAUSE IS DETERMINED BY A QUALIFIED PROFESSIONAL TO BE INCORRECT CONSTRUCTION OR COMPACTION DURING CONSTRUCTION, THE CONTRACTOR WILL BE RESPONSIBLE TO PERFORM REMEDIATION, OUTLINED BY THE QUALIFIED PROFESSIONAL, TO RESTORE THE FLOOR OF THE INFILTRATION FACILITY TO PRE-CONSTRUCTION CONDITION'S PERMEABILITY.
8. AFTER STORM WATER MANAGEMENT FACILITIES INSTALLATION IS COMPLETED, CONTACT THE LEBANON COUNTY ENGINEER (717-273-3217) FOR INSPECTION BY THE COUNTY ENGINEER.
9. NO OCCUPANCY PERMITTED UNTIL STORM WATER MANAGEMENT FACILITIES HAVE BEEN INSTALLED AND APPROVED THROUGH INSPECTION BY THE COUNTY ENGINEER.
10. THE PROPOSED SANITARY SEWER SYSTEM SHALL BE AN EXTENSION OF THE PUBLIC SANITARY SEWER SYSTEM, AS SHOWN HEREON. CONNECTION TO THE PUBLIC SEWER SYSTEM IS REQUIRED.
11. ALL PROPOSED SANITARY SEWER SHALL BE DESIGNED IN ACCORDANCE WITH THE NORTH LEBANON TOWNSHIP MUNICIPAL AUTHORITY, LEBANON COUNTY, CURRENT RULES AND PADEP REGULATIONS.
12. ALL SANITARY SEWER LATERALS SHALL HAVE A MINIMUM COVER OF FOUR (4) FEET AND A MINIMUM SLOPE OF 1/4" PER FOOT.
13. EACH DWELLING SHALL BE SERVICED BY SEPARATE SANITARY SEWER AND WATER SERVICE CONNECTIONS.
14. THE DEVELOPER WILL, BY DEEDS OF DEDICATION, TRANSFER TO THE RESPECTIVE AUTHORITY THE SEWER MAINS, WATER MAINS AND ATTENDING PARAPHERNALIA IN THE PROJECT.
15. IT SHALL BE THE RESPONSIBILITY OF THE CONTRACTOR TO COORDINATE WITH THE APPROPRIATE UTILITY COMPANY FOR THE REMOVAL, ABANDONMENT, RELOCATION OR INSTALLATION OF ANY PUBLIC UTILITY (GAS, ELECTRIC, TELEPHONE, CABLE TV AND FIBER OPTIC COMMUNICATIONS).
16. WATER SUPPLY FOR THE LOTS IS TO BE PROVIDED BY EXTENSION OF THE PUBLIC WATER SYSTEM BY THE SUBDIVIDER OR LAND DEVELOPER, AS SHOWN HEREON. CONNECTION TO THE PUBLIC WATER SYSTEM IS REQUIRED.
17. CONTACT INFORMATION FOR THE CITY OF LEBANON AUTHORITY (WATER):
    CITY OF LEBANON AUTHORITY, 2311 RIDGEVIEW ROAD, LEBANON, PA 17042
    BOB SENTZ, BSENTZ@LEBANONAUTHORITY.ORG, 717-272-2841
18. WATER SYSTEMS SHALL BE DESIGNED, CONSTRUCTED AND TESTED IN ACCORDANCE WITH THE CURRENT CITY OF LEBANON AUTHORITY'S "GENERAL SPECIFICATIONS FOR WATER SYSTEM CONSTRUCTION".
19. THE CONSTRUCTION OF WATER MAINS REQUIRES A WATER MAIN EXTENSION AGREEMENT BETWEEN THE DEVELOPER AND THE AUTHORITY.
20. WATER LATERAL AND/OR FIRE SERVICE CONNECTIONS BOTH REQUIRE APPLICATIONS AND PAYMENT FOR A CAPACITY FEE WITH THE AUTHORITY PRIOR TO MAKING THE WATER AND/OR FIRE LINE TAPS.
21. THE CITY OF LEBANON AUTHORITY SHALL APPROVE ALL MATERIALS PRIOR TO CONSTRUCTION.
22. A MANDATORY PRE-CONSTRUCTION MEETING SHALL BE HELD BETWEEN THE AUTHORITY, BUREAU OF WATER, AND WATERLINE CONSTRUCTION CONTRACTOR.
23. THE BUREAU OF WATER WILL INSPECT THE WATER MAIN INSTALLATION AND TESTING. THERE ARE FEES CHARGED TO THE DEVELOPER/ CONTRACTOR FOR INSPECTION SERVICES. WATER MAIN CONSTRUCTION AND FEES SHALL BE COORDINATED WITH THE AUTHORITY.
24. THE PROPERTY OWNER/DEVELOPER SHALL INSTALL THE WATER TAP AND SERVICE LINE TO THE CURB STOP UNDER THE INSPECTION OF THE BUREAU OF WATER. THE PROPERTY OWNER IS RESPONSIBLE FOR THE WATER SERVICE AFTER THE CURB STOP. THE BUREAU OF WATER WILL INSTALL THE WATER METER WITHIN THE BUILDING OR AN APPROVED METER PIT AS INSTRUCTED BY THE BUREAU OF WATER. CONTACT THE BUREAU OF WATER METER DEPARTMENT FOR METER INSTALLATION, 2200 WEST CHESTNUT STREET, 717-273-2506.
25. WATER SERVICE LATERALS OVER 150-FEET FROM THE CURB STOP TO THE ENTRANCE OF THE BUILDING REQUIRES THE INSTALLATION OF A METER WITHIN 10-FEET OF THE CURB STOP. METER PLACEMENT SHALL BE APPROVED BY THE METER DEPARTMENT PRIOR TO INSTALLATION.
26. FIRE HYDRANTS AND THEIR LOCATIONS WILL BE SUBJECT TO APPROVAL BY THE CITY OF LEBANON AUTHORITY.
27. ALL FIRE HYDRANT LATERALS SHALL INCLUDE A 6" GATE VALVE.
28. AT THE CONCLUSION OF THE INSTALLATION OF THE WATER SYSTEM AND SERVICE LINES, AND SUCCESSFUL TESTING THEREOF, THE WATER SYSTEM WILL BE OFFERED FOR DEDICATION TO NORTH LEBANON TOWNSHIP MUNICIPAL AUTHORITY.
29. ALL EXISTING WATER LATERALS SHALL BE TERMINATED AT THE WATER MAIN BY TURNING OFF THE CORPORATION STOP AT THE MAIN, AND THE SERVICE LINES CUT AND CRIMPED WITHIN ONE FOOT OF THE CORPORATION STOP. ALL WORK, INCLUDING SAW CUTTING, EXCAVATION, LATERAL TERMINATION, BACKFILL, AND PAVING, SHALL BE DONE BY THE CONTRACTOR AND INSPECTED BY THE BUREAU OF WATER.
30. A MINIMUM 10' HORIZONTAL CLEARANCE SHALL BE MAINTAINED BETWEEN WATER MAINS AND SANITARY SEWER MAIN, WHERE PRACTICABLE.
31. A MINIMUM 18" VERTICAL CLEARANCE BETWEEN WATER MAINS AND STORM SEWERS SHALL BE PROVIDED.
32. A MINIMUM 18" VERTICAL CLEARANCE BETWEEN WATER MAINS AND SANITARY SEWER MAINS SHALL BE PROVIDED.
33. WATER MAINS AND LATERALS THAT ARE LESS THAN 18-INCHES FROM A STORM SEWER OR CULVERT SHALL BE INSULATED WITH A FOAM WRAP.

WATER NOTES – CITY OF LEBANON AUTHORITY

1. CONTACT INFORMATION FOR THE CITY OF LEBANON AUTHORITY

   CITY OF LEBANON AUTHORITY, 2311 RIDGEVIEW ROAD, LEBANON, PA 17042
   BOB SENTZ, BSENTZ@LEBANONAUTHORITY.ORG, 717-272-2841
2. WATER SYSTEMS SHALL BE CONSTRUCTED AND TESTED IN ACCORDANCE WITH THE CURRENT CITY OF LEBANON AUTHORITY 'GENERAL SPECIFICATIONS FOR WATER SYSTEM CONSTRUCTION'.
3. THE CONSTRUCTION OF WATER MAINS REQUIRES A WATER MAIN EXTENSION AGREEMENT BETWEEN THE DEVELOPER AND THE AUTHORITY.
4. EXISTING WATER MAINS ARE SHOWN AT AN APPROXIMATE LOCATION. THE CONTRACTOR SHALL EXCAVATE TEST PITS TO DETERMINE ACTUAL LOCATIONS AND VERIFY WATER MAIN SIZES AND DEPTHS AT UTILITY CROSSINGS, EXCAVATED AREAS, AND TIE-IN LOCATIONS.
5. WATER SERVICE CONNECTION REQUIRES AN APPLICATION AND PAYMENT OF REQUIRED FEES WITH THE AUTHORITY PRIOR TO MAKING THE WATER TAPS.
6. FIRE SERVICE CONNECTION REQUIRES AN APPLICATION AND PAYMENT OF REQUIRED FEES WITH THE AUTHORITY PRIOR TO MAKING THE FIRE LINE TAP. FIRE LINE AGREEMENT ALSO REQUIRED.
7. ANY WORK WITHIN PENNDOT RIGHT-OF-WAY REQUIRES A PENNDOT HIGHWAY OCCUPANCY PERMIT (HOP). THE PERMIT TYPICALLY IS REQUIRED TO BE IN THE AUTHORITY'S NAME AND THE AUTHORITY MAY REQUIRE THE CONTRACTOR TO PROVIDE A FINANCIAL GUARANTEE UNTIL PENNDOT SIGNS OFF ON THE PERMIT AFTER CONSTRUCTION IS COMPLETE.
8. ANY WORK WITHIN MUNICIPAL RIGHT-OF-WAYS MIGHT REQUIRE A MUNICIPAL PERMIT. THE PERMIT SHALL BE ACQUIRED IN THE CONTRACTOR'S NAME.
9. THE AUTHORITY SHALL APPROVE ALL MATERIALS PRIOR TO CONSTRUCTION.
10. A MANDATORY PRE-CONSTRUCTION MEETING SHALL BE HELD BETWEEN THE AUTHORITY AND WATERLINE CONSTRUCTION CONTRACTOR.
11. THE CITY OF LEBANON AUTHORITY WILL INSPECT THE WATER MAIN INSTALLATION AND ASSIST IN COORDINATING TESTING. THERE ARE FEES CHARGED TO THE DEVELOPER / CONTRACTOR FOR INSPECTION SERVICES. WATER MAIN CONSTRUCTION AND FEES SHALL BE COORDINATED WITH THE AUTHORITY.
12. THE PROPERTY OWNER / DEVELOPER SHALL INSTALL THE WATER TAP AND SERVICE LINE TO THE CURB STOP UNDER THE INSPECTION OF THE CITY OF LEBANON AUTHORITY. THE PROPERTY OWNER IS RESPONSIBLE FOR THE WATER SERVICE AFTER THE CURB STOP. THE CITY OF LEBANON AUTHORITY WILL INSTALL THE WATER METER WITHIN THE BUILDING OR AN APPROVED METER PIT AS INSTRUCTED. CONTACT THE CITY OF LEBANON AUTHORITY METER DEPARTMENT FOR METER INSTALLATION, 2200 WEST CHESTNUT STREET, 717-273-2506.
13. METER PIT INSTALLATIONS ARE MANDATORY. ANY EXCEPTION TO METER PIT INSTALLATION IS AT THE DISCRETION OF THE CITY OF LEBANON AUTHORITY. METER PIT TO BE INSTALLED WITHIN 10-FEET OF THE CURB STOP. METER PITS SHALL BE APPROVED BY THE METER DEPARTMENT PRIOR TO INSTALLATION.
14. SEWER AND WATER MAINS SHALL HAVE A MINIMUM OF AN 18-INCH SEPARATION, OR THE SEWER MAIN SHALL BE CONCRETE ENCASED IN THE AREA WHERE THE 18-INCH SEPARATION CANNOT BE MAINTAINED.
15. WATER MAINS AND LATERALS THAT ARE LESS THAN 18-INCHES FROM A STORM SEWER OR CULVERT SHALL BE INSULATED WITH A FOAM WRAP.
16. AT THE CONCLUSION OF THE INSTALLATION OF THE WATER SYSTEM AND SERVICE LINES, AND SUCCESSFUL TESTING THEREOF, THE WATER SYSTEM WILL BE OFFERED FOR DEDICATION TO THE CITY OF LEBANON AUTHORITY.
17. ALL EXISTING WATER SERVICE TERMINATIONS SHALL BE AT THE WATER MAIN BY TURNING OFF THE CORPORATION STOP AT THE MAIN AND THE SERVICE LINES CUT AND CRIMPED WITHIN ONE FOOT OF THE CORPORATION STOP. ALL WORK, INCLUDING SAW CUTTING, EXCAVATION, LATERAL TERMINATION, BACKFILL, AND PAVING, SHALL BE DONE BY THE CONTRACTOR AND INSPECTED BY THE CITY OF LEBANON AUTHORITY.

MODIFICATIONS APPROVED

THE FOLLOWING WAIVERS OF THE LEBANON COUNTY SUBDIVISION AND LAND DEVELOPMENT ORDINANCE AND THE NORTH LEBANON TOWNSHIP RIGHT-OF-WAY IMPROVEMENTS AND OTHER RELATED SPECIFICATIONS HAVE BEEN GRANTED.

LEBANON COUNTY

THE BELOW WAIVERS FROM THE LEBANON COUNTY SALDO WERE GRANTED ON MAY 24, 2010 AS A PART OF THE PRELIMINARY PLAN APPROVAL.

1. SECTION 5.02.I – FLAG LOTS SHALL BE AVOIDED. THE DEVELOPER PROPOSES TWO (2) LOTS THAT WILL BE DESIGNED AS FLAG PROVIDED WHERE THEY CANNOT BE AVOIDED DUE TO THE TRACT SHAPE OR SITE FEATURES. 141 ARE FLAG LOTS. RESPONSIBILITIES AND RIGHTS PERTAINING TO DRAINAGE ISSUES BE REQUIRED FOR THE OWNERS OF LOTS 140 AND 141.
2. SECTION 5.02.D – DEPTH OF RESIDENTIAL LOTS SHOULD NOT BE LESS THAN 1 NOR MORE THAN 2-1/2 TIMES THE LOT WIDTH. SEVERAL OF THE PROPOSED LOTS DO NOT COMPLY WITH THIS REQUIREMENT DUE TO THE CONFIGURATION OF THE PROPOSED TRACT AND ITS EXISTING FEATURES. WAIVER REQUEST FOR LOTS:
   3-5,7,14,27-30,32,33,35,53,60,66,69-72,78-80,94,96,97,100,101,121,132-135,138-141,158-160,182-189,197,198 AND 201.
3. SECTION 5.10.C.1.a – INTERSECTING STREETS SHOULD BE AT RIGHT ANGLES FOR AT LEAST 100' FROM POINT OF CARTWAY INTERSECTION. SEVERAL OF THE PROPOSED STREETS DO NOT MEET THIS REQUIREMENT, HOWEVER THEY ARE STILL DESIGNED ACCORDING TO ACCEPTABLE ENGINEERING STANDARDS FOR ROADWAY DESIGN. ALSO THE PROPOSED STREETS ARE INTENDED TO REMAIN PRIVATE AND BE OWNED AND MAINTAINED BY A HOMEOWNER'S ASSOCIATION. WAIVER REQUEST FOR STREETS: SWEETBAY LANE AT INTERSECTION WITH SNAPDRAGON CT. BELLA MAY CIRCLE (STA. 14+39.28) AT INTERSECTION WITH LILLIANA DRIVE. BRIAR ROSE AVE (STA. 26+74.44) AT INTERSECTION WITH BELLA MAY CIRCLE. BRIAR ROSE AVE (STA. 23+87) AT INTERSECTION WITH ORCHID CIRCLE. GINGER COURT (STA. 5+64.51) AT INTERSECTION WITH GINGER COURT. BRIAR ROSE AVE (STA. 7+79.80) AT INTERSECTION WITH SWEETBAY LANE.
4. SECTION 5.05 – GRADING, WHERE POSSIBLE, GRASS STRIPS OR CHANNELS BETWEEN THE CURB OR SHOULDER AND RIGHT-OF-WAY LINE SHOULD BE GRADED AT 3:1 SLOPE. THE PROPOSED DEVELOPMENT HAS AREAS THAT HAVE 2:1 SLOPES. THIS WAS DONE TO AVOID ADDITIONAL EARTH MOVING AS WELL AS AVOID ANY

F:\12\12-0950-02\CAD\Final Plan\Existing Features.dwg, 3 OVERALL EXISTING FEATURES & DEMOLITION PLAN, 6/7/2022 2:22:36 PM, 1:1

NOTES

1. EXISTING PHASE 1, 2 & 3 IMPROVEMENTS WERE TAKEN FROM PHASE 1, 2 & 3 FINAL SUBDIVISION PLANS.

SOILS LEGEND

BeA – BEDINGTON SHALY SILT LOAM, 0–3% SLOPES
BeB – BEDINGTON SHALY SILT LOAM, 3–8% SLOPES
BkB – BERKS SHALY SILT LOAM, 3–8% SLOPES
BkC – BERKS SHALY SILT LOAM, 8–15% SLOPES
CmB – COMLY SILT LOAM, ROCKY, 3–8% SLOPES
SOIL BOUNDARY
SOIL DESCRIPTION LABEL BeB

N O R T H

EXISTING 80' DIA. TEMP. STONE TURN-AROUND AREA TO BE REMOVED

EXISTING TEMP. SWALE A & TEMP. SWALE B TO BE REMOVED

EXISTING TREES TO BE REMOVED (SEE SHEET 7 FOR PROPOSED TREELINE)

PROPERTY LINE FUNCTIONS		
#	BEARING	DIST.
L1	N 13°13'24"E	66.00'
L2	S 88°08'28"W	68.30'
L3	S 20°03'38"W	66.00'

NO.	DATE	REVISION
2	4-25-22	REVISED PER N.L.T. LEB. CO. ENGINEER & CITY OF LEB. AUTHORITY
1	2-1-22	REVISED PER N.L.T. LEB. CO. ENGINEER, LCPD, NLTMA, & CITY OF LEB. AUTHORITY

FOR PIONEER MANAGEMENT BY:

MANAGER: JAMES C. HENKE
DESIGN BY: JDB/KWG
DRAWING REFERENCE: F:\12\12-0950-02\CAD\Final Plan\Existing Features.dwg
XREFS:

SURV. CHIEF: RC
DRAWN BY: RC
FIELDBOOK NO. VALUE
CHKD BY: RC

CLIENT
LANDMARK HOMES AT SWEETBRIAR
c/o MR. CLIFF WEAVER
1737 WEST MAIN STREET
EPHRATA, PA 17522
(717) 733-1536

SCALE 1" = 150' (0, 75', 150', 300', 450')

PIONEER Management, LLC
711 Millersville Road, Lancaster, PA 17603
Phone: (717) 435-8300 Fax: (717) 481-4955
Email: jb@pioneermanagementllc.com
Website: www.pioneermanagementllc.com

OVERALL EXISTING FEATURES & DEMOLITION PLAN
FINAL PHASE 4 & REVISED FINAL PHASE 3 SUBDIVISION PLAN
FOR
THE CROSSINGS AT SWEET BRIAR
NORTH LEBANON TOWNSHIP, LEBANON COUNTY, PA

DATE: JUNE 25, 2021
SHEET NO. 3 OF 43
DWG. NO. 12-0950-02-F

LEGEND

PROPOSED PHASING LINE

DWELLING SCHEDULE

PHASE 1	-----	53 SINGLE-FAMILY DETACHED DWELLING UNITS TOTAL
PHASE 2	-----	60 SINGLE-FAMILY DETACHED DWELLING UNITS TOTAL
PHASE 3	-----	28 SINGLE-FAMILY DETACHED DWELLING UNITS TOTAL
PHASE 4	-----	58 SINGLE-FAMILY DETACHED DWELLING UNITS TOTAL

THE SOLE PURPOSE OF THIS PLAN IS TO IDENTIFY THE PHASING FOR THIS PROJECT.

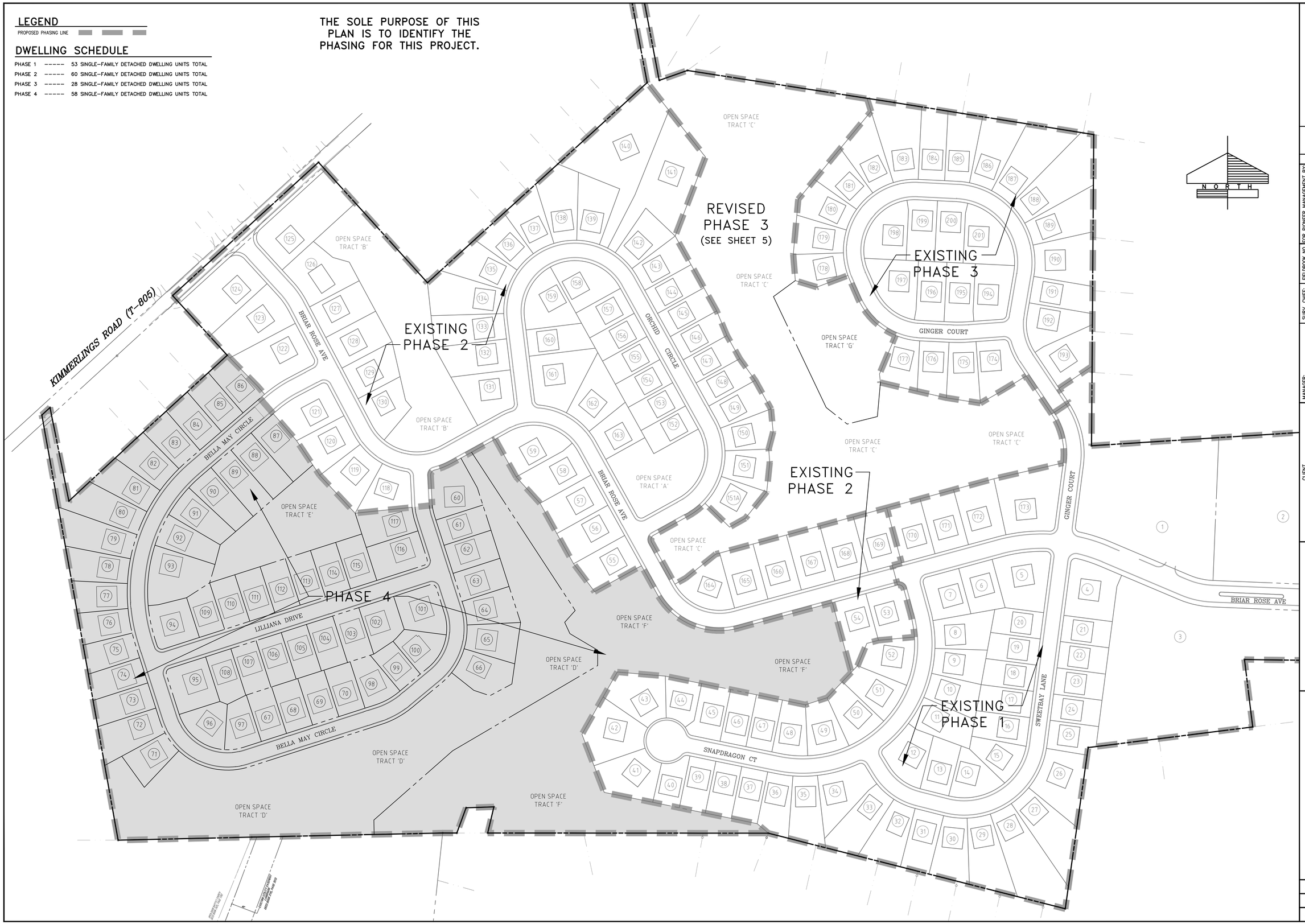

NO.	DATE	REVISION
2	4-25-22	REVISED PER NLT, LEB. CO. ENGINEER & CITY OF LEB. AUTHORITY
1	2-1-22	REVISED PER NLT, LEB. CO. ENGINEER, LCPD, NLTMA, & CITY OF LEB. AUTHORITY

FOR PIONEER MANAGEMENT BY:

MANAGER: JAMES C. HENKE
DESIGN BY: JDB/KWG
CHKD BY: JDB/JCH
SURV. CHIEF: RC
DRAWN BY: RC
FIELDBOOK NO. VALUE
CHKD BY: RC

DRAWING REFERENCE:
F:\12\12-0950-02\CAD\Final-Phs4\Phasing.dwg

XREFS:
TB (F:\12\12-0950-02\CAD\Final-Phs4\X-refs\TB.dwg)
X-Base (F:\12\12-0950-02\CAD\Final-Phs4\X-refs\X-Base.dwg)
P-Base (F:\12\12-0950-02\CAD\Final-Phs4\X-refs\P-Base.dwg)
Phs-CB-block (F:\12\12-0950-02\CAD\Final-Phs4\X-refs\Phs-CB-block.dwg)
Phs-AB-block (F:\12\12-0950-02\CAD\Final-Phs4\X-refs\Phs-AB-block.dwg)
Street-Alignments-Base (F:\12\12-0950-02\CAD\Final-Phs4\X-refs\Street-Alignments-Base.dwg)
Phs-AB-block (F:\12\12-0950-02\CAD\Final-Phs4\X-refs\Phs-AB-block.dwg)

CLIENT
LANDMARK HOMES AT SWEETBRIAR
c/o MR. CLIFF WEAVER
1737 WEST MAIN STREET
EPHRATA, PA 17522
(717) 733-1536

SCALE
0 50' 100' 1" = 100' 200' 300'

PIONEER Management, LLC
111 Millersville Road, Lancaster, PA 17603
Phone (717) 481-5500 · Fax (717) 481-4955
Email: info@pioneermanagementllc.com
Website: www.pioneermanagementllc.com

OVERALL PHASING PLAN

FINAL PHASE 4 & REVISED FINAL PHASE 3 SUBDIVISION PLAN
FOR
THE CROSSINGS AT SWEET BRIAR
NORTH LEBANON TOWNSHIP LEBANON COUNTY, PA

DATE: JUNE 25, 2021
SHEET NO. 4 OF 43
DWG. NO. 12-0950-02-F

THE SOLE PURPOSE OF THIS PLAN IS TO IDENTIFY THE EXISTING OPEN SPACE TRACT 'C' (PHASE 3) THAT IS BEING REVISED AS A PART OF THIS PLAN, TO SUBDIVIDE SAID TRACT INTO OPEN SPACE TRACTS 'C' & 'G' AND TO DESCRIBE THOSE RESULTANT TRACTS. SEE SHEETS 16–18 FOR REVISED PHASE 3 OPEN SPACE EASEMENT PLAN.

OPEN SPACE GEOMETRY

CURVE TABLE

CURVE #	LENGTH	DELTA	RADIUS	TANGENT	BEARING	CHORD
OSC9	10.25'	3°21'24"	175.00'	5.13'	S22°09'44"E	10.25'
OSC10	132.71'	43°26'58"	175.00'	69.73'	S45°33'55"E	129.55'
OSC11	125.83'	41°11'54"	175.00'	65.78'	N13°10'47"W	123.14'
OSC12	18.85'	90°00'00"	12.00'	12.00'	S16°01'04"W	16.97'
OSC13	51.61'	16°53'53"	175.00'	25.99'	N52°34'07"E	51.43'
OSC14	30.26'	9°54'24"	175.00'	15.17'	S86°12'44"W	30.22'

RIGHT–OF–WAY LEGEND

RIGHT–OF–WAY AREA OF KIMMERLINGS ROAD (T–805) PROPOSED TO BE OFFERED FOR DEDICATION TO THE TOWNSHIP AS A PART OF PHASE 3

VIEWPORT A
SCALE 1"=200'

SEE VIEWPORT A MATCHLINE A

MATCHLINE A SEE MAIN VIEWPORT

OPEN SPACE TRACT 'C'
9.904 AC. (GROSS)
9.887 AC. (NET)

OPEN SPACE TRACT 'G'
1.442 AC.

OPEN SPACE TRACT 'C'
9.904 AC. (GROSS)
9.887 AC. (NET)

THE CROSSINGS AT SWEETBRIAR PHASE 2

THE CROSSINGS AT SWEETBRIAR PHASE 3

THE CROSSINGS AT SWEETBRIAR PHASE 4

THE CROSSINGS AT SWEETBRIAR PHASE 1

KIMMERLINGS ROAD (T–805)

BRIAR ROSE AVE

ORCHID CIRCLE

GINGER COURT

SNAPDRAGON CT

SWEETBAY LANE

BRIAR RO

LEGEND
PROPOSED IRON PIN ○

N

NO.	DATE	REVISION
2	4–25–22	REVISED PER NLT, LEB. CO. ENGINEER & CITY OF LEB. AUTHORITY
1	2–1–22	REVISED PER NLT, LEB. CO. ENGINEER, LCPD, NLTMA, & CITY OF LEB. AUTHORITY

FOR PIONEER MANAGEMENT BY:

FIELDBOOK NO.
VALUE

SURV. CHIEF:
RC

DRAWN BY:
RC

CHKD BY:
RC

MANAGER:
JAMES C. HENKE

DESIGN BY:
JDB/KWG

CHKD BY:
JDB/JCH

DRAWING REFERENCE:
F:\12\12–0950–02\CAD\Final–PH4\Layout–Phase–3.dwg

XREFS:
Tb: [F:\12\12–0950–02\CAD\Tbar–PH4.tx–wtb.tbl]
Ptb–Base: [F:\12\12–0950–02\CAD\Tbar–PH4.tx–wtb.tbl]
Ptb–Base: [F:\12\12–0950–02\CAD\Tbar–PH4.tx–wtb.tbl]
Title–Block: [F:\12\12–0950–02\CAD\Tbar–PH4.tx–wtb.tbl]
Title–Block: [F:\12\12–0950–02\CAD\Tbar–PH4.tx–wtb.tbl]
Alignments: [F:\12\12–0950–02\CAD\Tbar–PH4.tx–wtb.tbl]
Alignments–Base: [F:\12\12–0950–02\CAD\Tbar–PH4.tx–wtb.tbl]

CLIENT
LANDMARK HOMES AT SWEETBRIAR
c/o MR. CLIFF WEAVER
1737 WEST MAIN STREET
EPHRATA, PA 17522
(717) 733–1536

SCALE
1" = 100'
0 50' 100' 200' 300'

PIONEER Management, LLC
111 Millersville Road, Lancaster, PA 17603
Phone: (717) 435–8304 Fax: (717) 481–4955
Email: pm@pioneermanagementllc.com
Website: www.pioneermanagementllc.com

REVISED PHASE 3 OPEN SPACE LAYOUT PLAN
FINAL PHASE 4 && REVISED FINAL PHASE 3 SUBDIVISION PLAN
FOR
THE CROSSINGS AT SWEET BRIAR
NORTH LEBANON TOWNSHIP LEBANON COUNTY, PA.

DATE: JUNE 25, 2021

SHEET NO. 5 OF 43

DWG. NO. 12–0950–02–F

LOT CURVE TABLE						
CURVE #	LENGTH	DELTA	RADIUS	TANGENT	BEARING	CHORD
C30	274.89'	90°00'00"	175.00'	175.00'	S62°49'07"E	247.49'
C31	86.19'	21°56'55"	225.00'	43.63'	N61°12'26"E	85.67'
C32	207.85'	68°03'05"	175.00'	118.15'	N16°12'26"E	195.85'
C33B	32.70'	14°59'19"	125.00'	16.44'	S10°19'27"E	32.61'
C34	16.46'	78°35'17"	12.00'	9.82'	S36°27'51"W	15.20'
C35	45.02'	14°44'25"	175.00'	22.64'	N68°23'17"E	44.90'
C58	18.85'	90°00'00"	12.00'	12.00'	N62°49'07"W	16.97'
C59	148.47'	68°03'05"	125.00'	84.40'	N16°12'26"E	139.89'
C61	196.35'	90°00'00"	125.00'	125.00'	S62°49'07"E	176.78'
C62	18.85'	90°00'00"	12.00'	12.00'	S27°10'53"W	16.97'
C63	18.85'	90°00'00"	12.00'	12.00'	S62°49'07"E	16.97'
C64	438.73'	67°01'57"	375.00'	248.36'	S15°41'52"W	414.13'
C70	18.85'	90°00'00"	12.00'	12.00'	N27°10'53"E	16.97'
C154	46.21'	15°07'44"	175.00'	23.24'	N10°15'14"W	46.07'
C155	59.05'	19°19'55"	175.00'	29.81'	N6°58'35"E	58.77'
C156	66.84'	21°53'01"	175.00'	33.83'	N27°35'03"E	66.43'
C157	186.66'	61°06'45"	175.00'	103.31'	S77°15'44"E	177.93'
C160	55.80'	18°16'13"	175.00'	28.14'	S37°34'16"E	55.57'
C161	32.43'	10°37'03"	175.00'	16.26'	S23°07'38"E	32.38'
C162	30.23'	4°04'29"	425.00'	15.12'	S15°46'52"E	30.22'
C163	61.39'	8°16'34"	425.00'	30.75'	S9°36'20"E	61.34'
C164	61.39'	8°16'34"	425.00'	30.75'	S1°19'47"E	61.34'
C165	61.39'	8°16'34"	425.00'	30.75'	S6°56'47"W	61.34'
C166	61.39'	8°16'34"	425.00'	30.75'	S15°13'21"W	61.34'
C167	61.39'	8°16'34"	425.00'	30.75'	S23°29'55"W	61.34'
C168	61.39'	8°16'34"	425.00'	30.75'	S31°46'29"W	61.34'
C169	70.83'	9°32'57"	425.00'	35.50'	S40°41'14"W	70.75'
C170	27.83'	3°45'08"	425.00'	13.92'	S47°20'17"W	27.83'
C171	39.81'	6°04'57"	375.00'	19.92'	S46°10'22"W	39.79'
C172	82.73'	12°38'24"	375.00'	41.53'	S36°48'41"W	82.56'
C173	82.67'	12°37'50"	375.00'	41.50'	S24°10'34"W	82.50'
C174	150.55'	23°00'06"	375.00'	76.30'	S6°21'36"W	149.54'
C175	82.97'	12°40'39"	375.00'	41.66'	S11°28'43"E	82.81'
C176	149.36'	68°27'40"	125.00'	85.05'	S52°02'57"E	140.63'
C177	46.99'	21°32'20"	125.00'	23.78'	N82°57'03"E	46.71'

LOT CURVE TABLE						
CURVE #	LENGTH	DELTA	RADIUS	TANGENT	BEARING	CHORD
C178	67.04'	21°56'55"	175.00'	33.93'	N61°12'26"E	66.63'
C179	93.39'	42°48'30"	125.00'	49.00'	N28°49'44"E	91.24'
C180	55.07'	25°14'35"	125.00'	27.99'	N5°11'49"W	54.63'
C181	36.43'	11°55'44"	175.00'	18.28'	S11°51'15"E	36.37'
C264C	26.02'	11°55'44"	125.00'	13.06'	S11°51'15"E	25.98'
C307	35.76'	11°42'25"	175.00'	17.94'	N44°22'46"E	35.69'

CENTERLINE CURVE TABLE						
CURVE #	LENGTH	DELTA	RADIUS	TANGENT	BEARING	CHORD
C868	31.23'	11°55'44"	150.00'	15.67'	S11°51'15"E	31.17'
C87	178.16'	68°03'05"	150.00'	101.27'	N16°12'26"E	167.87'
C88	76.61'	21°56'55"	200.00'	38.78'	N61°12'26"E	76.15'
C89	235.62'	90°00'00"	150.00'	150.00'	S62°49'07"E	212.13'
C90	467.98'	67°01'57"	400.00'	264.92'	S15°41'52"W	441.74'
C308	39.24'	14°59'19"	150.00'	19.73'	S10°19'27"E	39.13'

RIGHT-OF-WAY LEGEND

RIGHT-OF-WAY AREA OF KIMMERLINGS ROAD (T-805) INTENDED TO BE OFFERED FOR DEDICATION TO THE TOWNSHIP AS A PART OF THIS PHASE

LEGEND

EXISTING WETLANDS BOUNDARY
EXISTING STREAM CENTERLINE
EXISTING ADJOINER LINE
EXISTING BOUNDARY LINE
EXISTING CENTERLINE
PROPOSED CENTERLINE
EXISTING EDGE OF CARTWAY
PROPOSED EDGE OF PAVEMENT/CURB
EXISTING RIGHT-OF-WAY LINE
PROPOSED RIGHT-OF-WAY LINE
PROPOSED LOT LINE
PROPOSED MIN. BUILDING SETBACK LINE
EXISTING EASEMENT LINE
PROPOSED EASEMENT LINE
PROPOSED CLEAR SIGHT TRIANGLE (25' C.S.T.)
EXISTING FENCE
EXISTING GUIDE RAIL
EXISTING RIPARIAN BARRIER
PROPOSED FENCE
PROPOSED GUIDE RAIL
PROPOSED RIPARIAN BARRIER
EXISTING SIGN
PROPOSED SPEED LIMIT SIGN
PROPOSED STREET NAME SIGN
PROPOSED STOP SIGN
EXISTING LOT MARKER
PROPOSED IRON PIN TO BE SET
PROPOSED CONCRETE MONUMENT TO BE SET (SEE GENERAL NOTE #8)
BENCHMARK
EXISTING VEGETATION (SHRUB, TREE)
EXISTING TREELINE/BRUSHLINE
PROPOSED TREELINE
EXISTING UTILITY POLE W/ GUY WIRE
EXISTING OVERHEAD ELECTRIC
EXISTING UNDERGROUND ELECTRIC
EXISTING ELECTRIC BOX
EXISTING LIGHT
PROPOSED STREET LIGHT
EXISTING WATERLINE
EXISTING WATER VALVE
EXISTING FIRE HYDRANT
EXISTING SANITARY SEWER MANHOLE
EXISTING GRAVITY SANITARY SEWER
EXISTING STORM PIPE
EXISTING STORM MANHOLE
EXISTING STORM INLET
EXISTING STORM HEADWALL/ENDWALL
EXISTING GAS LINE
EXISTING GAS VALVE
PROPOSED PAVED PATH
PROPOSED CONCRETE SIDEWALK
PEDESTRIAN CROSSWALK
PROPOSED DRIVEWAY
PROPOSED LOT NUMBER (100)
ZONING BOUNDARY

KEY MAP

SCALE: 1"=1000'

SHEET 6
SHEET 7
SHEET 8

KIMMERLINGS ROAD (T-805)
N 45°34'30" E 465.49'
N 42°29'07" W 198.91'
N 47°32'44" E 301.30'
MARCON DRIVE
N 47°34'30" E 27.14'
S 11°25'14" E 234.40'
N 47°06'40" E 227.42'
N 11°01'14" W 601.61'
BRIAR ROSE AVENUE
BELLA WAY CIRCLE
LILLIANA DRIVE
MATCHLINE SEE SHEET 7
MATCHLINE SEE SHEET 8
OPEN SPACE TRACT 'E' 1.108 AC.
OPEN SPACE TRACT 'F' 6.873 AC.
OPEN SPACE TRACT 'D' 5.667 AC.
OPEN SPACE TRACT 'C' 4.970 AC.
EXISTING CONSERVATION EASEMENT AREA A
EXISTING CONSERVATION EASEMENT AREA B
CLAYTON R & EILEEN F. GEORGE DEED BOOK 31, PAGE 522
TERRY L & AUDREY K ZELLERS DEED BOOK 256, PAGE 672
ROBERT J & VALERIE J CARROLL DEED BOOK 2009, PAGE 3157
MICHAEL F & TAHIA A ARNICK DEED BOOK 301, PAGE 757
MICHAEL S. WARFIELD JR. DEED BOOK 2274, PAGE 8401
S44°24'49"E 107.57'
S40°47'09"E 25.00'
N84°51'33"E 25.00'
S17°49'07"E 120.00'
N72°10'53"E 392.50'
S16°17'38"W 46.89'
S14°47'45"W 49.97'
S17°49'07"E 53.55'
N84°06'37"E 140.40'
S33°43'36"E 30.61'
S43°07'35"E 127.31'
N82°34'31"W 104.22'
S41°54'36"W 28.95'
S56°13'59"W 94.19'
S67°18'58"E 131.75'
S72°07'27"E 129.79'
S17°49'07"E 64.19'
S17°49'07"E 65.00'
S17°49'07"E 74.00'
S17°49'07"E 133.59'
S17°49'07"E 96.55'
S17°49'07"E 133.36'
S17°49'07"E 121.50'
S17°49'07"E 121.50'
S17°49'07"E 121.50

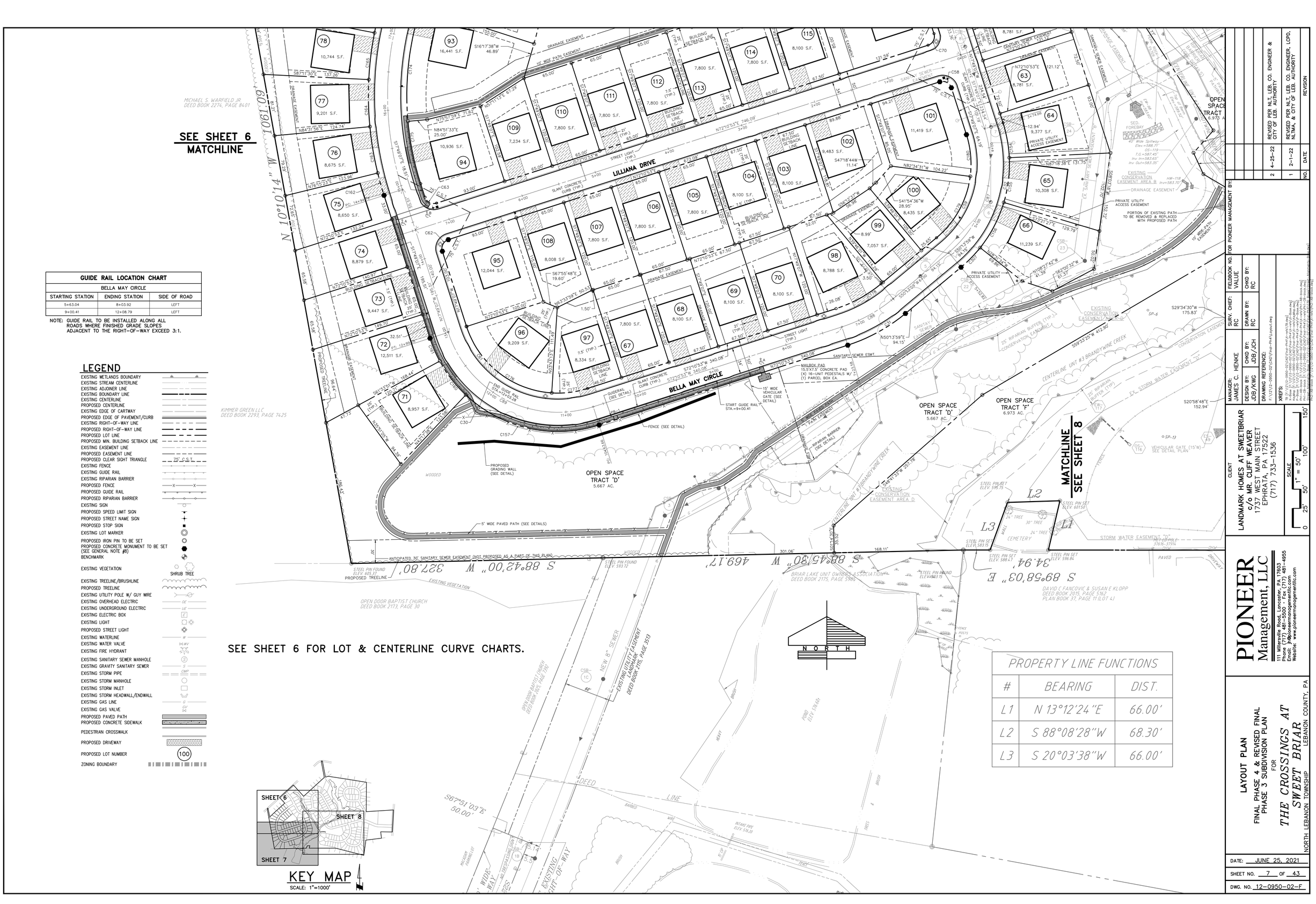

SEE SHEET 6 FOR LOT & CENTERLINE CURVE CHARTS.

GUIDE RAIL LOCATION CHART		
BELLA MAY CIRCLE		
STARTING STATION	ENDING STATION	SIDE OF ROAD
5+63.04	8+03.92	LEFT
9+00.41	12+08.79	LEFT

NOTE: GUIDE RAIL TO BE INSTALLED ALONG ALL ROADS WHERE FINISHED GRADE SLOPES ADJACENT TO THE RIGHT-OF-WAY EXCEED 3:1.

LEGEND

- EXISTING WETLANDS BOUNDARY
- EXISTING STREAM CENTERLINE
- EXISTING ADJOINER LINE
- EXISTING BOUNDARY LINE
- EXISTING CENTERLINE
- PROPOSED CENTERLINE
- EXISTING EDGE OF CARTWAY
- PROPOSED EDGE OF PAVEMENT/CURB
- EXISTING RIGHT-OF-WAY LINE
- PROPOSED RIGHT-OF-WAY LINE
- PROPOSED LOT LINE
- PROPOSED MIN. BUILDING SETBACK LINE
- EXISTING EASEMENT LINE
- PROPOSED EASEMENT LINE
- PROPOSED CLEAR SIGHT TRIANGLE (25' C.S.T.)
- EXISTING FENCE
- EXISTING GUIDE RAIL
- EXISTING RIPARIAN BARRIER
- PROPOSED FENCE
- PROPOSED GUIDE RAIL
- PROPOSED RIPARIAN BARRIER
- EXISTING SIGN
- PROPOSED SPEED LIMIT SIGN
- PROPOSED STREET NAME SIGN
- PROPOSED STOP SIGN
- EXISTING LOT MARKER
- PROPOSED IRON PIN TO BE SET
- PROPOSED CONCRETE MONUMENT TO BE SET (SEE GENERAL NOTE #8)
- BENCHMARK
- EXISTING VEGETATION (SHRUB / TREE)
- EXISTING TREELINE/BRUSHLINE
- PROPOSED TREELINE
- EXISTING UTILITY POLE W/ GUY WIRE
- EXISTING OVERHEAD ELECTRIC
- EXISTING UNDERGROUND ELECTRIC
- EXISTING ELECTRIC BOX
- EXISTING LIGHT
- PROPOSED STREET LIGHT
- EXISTING WATERLINE
- EXISTING WATER VALVE
- EXISTING FIRE HYDRANT
- EXISTING SANITARY SEWER MANHOLE
- EXISTING GRAVITY SANITARY SEWER
- EXISTING STORM PIPE
- EXISTING STORM MANHOLE
- EXISTING STORM INLET
- EXISTING STORM HEADWALL/ENDWALL
- EXISTING GAS LINE
- EXISTING GAS VALVE
- PROPOSED PAVED PATH
- PROPOSED CONCRETE SIDEWALK
- PEDESTRIAN CROSSWALK
- PROPOSED DRIVEWAY
- PROPOSED LOT NUMBER (100)
- ZONING BOUNDARY

KEY MAP
SCALE: 1"=1000'

PROPERTY LINE FUNCTIONS		
#	BEARING	DIST.
L1	N 13°12'24"E	66.00'
L2	S 88°08'28"W	68.30'
L3	S 20°03'38"W	66.00'

NO.	DATE	REVISION
2	4-25-22	REVISED PER M.T. LEB. CO. ENGINEER & CITY OF LEB. AUTHORITY
1	2-1-22	REVISED PER M.T. LEB. CO. ENGINEER, LCPD, NLTMA, & CITY OF LEB. AUTHORITY

FOR PIONEER MANAGEMENT BY:

MANAGER: JAMES C. HENKE
SURV. CHIEF: RC
FIELDBOOK NO. VALUE
DESIGN BY: JDB/KWG
CHKD BY: JDB/JCH
DRAWN BY: RC
CHKD BY: RC
DRAWING REFERENCE: C:\12\12-0950-02\DATA\Final-Ph4\Layout.dwg
XREFS:

CLIENT
LANDMARK HOMES AT SWEETBRIAR
c/o MR. CLIFF WEAVER
1737 WEST MAIN STREET
EPHRATA, PA 17522
(717) 733-1536

SCALE 1" = 50'

PIONEER Management, LLC
111 Millersville Road, Lancaster, PA 17603
Phone: (717) 435-8300 Fax: (717) 481-4955
Email: jh@pioneermanagementllc.com
Website: www.pioneermanagementllc.com

LAYOUT PLAN
FINAL PHASE 4 & REVISED FINAL PHASE 3 SUBDIVISION PLAN
FOR
THE CROSSINGS AT SWEET BRIAR
NORTH LEBANON TOWNSHIP LEBANON COUNTY, PA.

DATE: JUNE 25, 2021
SHEET NO. 7 OF 43
DWG. NO. 12-0950-02-F

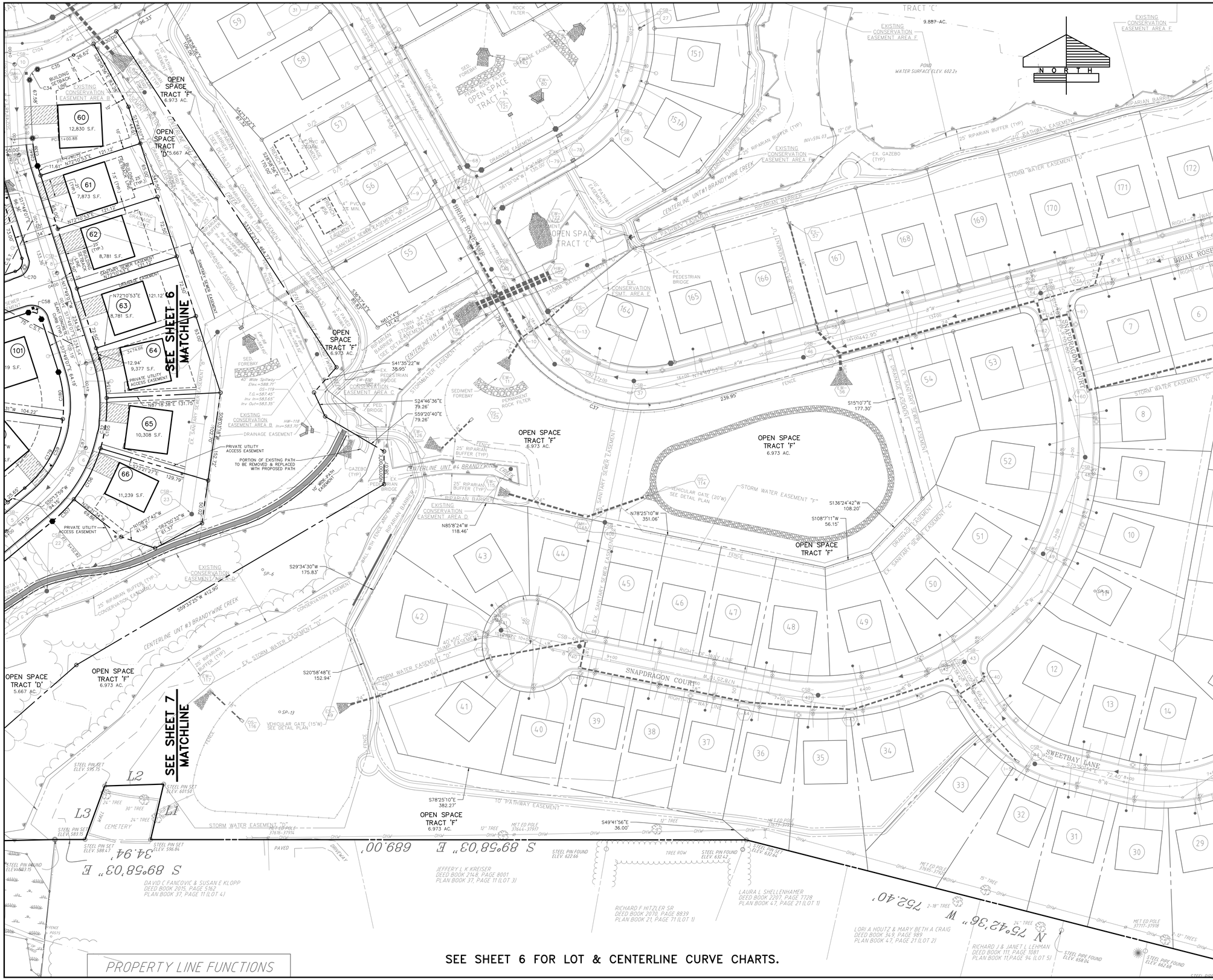

SEE SHEET 6 FOR LOT & CENTERLINE CURVE CHARTS.

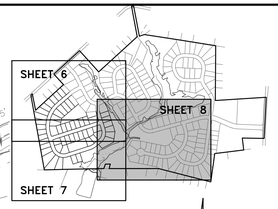

KEY MAP

SCALE: 1"=1000'

LEGEND

- EXISTING WETLANDS BOUNDARY
- EXISTING STREAM CENTERLINE
- EXISTING ADJOINER LINE
- EXISTING BOUNDARY LINE
- EXISTING CENTERLINE
- PROPOSED CENTERLINE
- EXISTING EDGE OF CARTWAY
- PROPOSED EDGE OF PAVEMENT/CURB
- EXISTING RIGHT-OF-WAY LINE
- PROPOSED RIGHT-OF-WAY LINE
- PROPOSED LOT LINE
- PROPOSED MIN. BUILDING SETBACK LINE
- EXISTING EASEMENT LINE
- PROPOSED EASEMENT LINE
- PROPOSED CLEAR SIGHT TRIANGLE — 75' C.S.T.
- EXISTING FENCE
- EXISTING GUIDE RAIL
- EXISTING RIPARIAN BARRIER
- PROPOSED FENCE
- PROPOSED GUIDE RAIL
- PROPOSED RIPARIAN BARRIER
- EXISTING SIGN
- PROPOSED SPEED LIMIT SIGN
- PROPOSED STREET NAME SIGN
- PROPOSED STOP SIGN
- EXISTING LOT MARKER
- PROPOSED IRON PIN TO BE SET
- PROPOSED CONCRETE MONUMENT TO BE SET (SEE GENERAL NOTE #8)
- BENCHMARK
- EXISTING VEGETATION — SHRUB TREE
- EXISTING TREELINE/BRUSHLINE
- PROPOSED TREELINE
- EXISTING UTILITY POLE W/ GUY WIRE
- EXISTING OVERHEAD ELECTRIC
- EXISTING UNDERGROUND ELECTRIC
- EXISTING ELECTRIC BOX
- EXISTING LIGHT
- PROPOSED STREET LIGHT
- EXISTING WATERLINE
- EXISTING WATER VALVE
- EXISTING FIRE HYDRANT
- EXISTING SANITARY SEWER MANHOLE
- EXISTING GRAVITY SANITARY SEWER
- EXISTING STORM PIPE
- EXISTING STORM MANHOLE
- EXISTING STORM INLET
- EXISTING STORM HEADWALL/ENDWALL
- EXISTING GAS LINE
- EXISTING GAS VALVE
- PROPOSED PAVED PATH
- PROPOSED CONCRETE SIDEWALK
- PEDESTRIAN CROSSWALK
- PROPOSED DRIVEWAY
- PROPOSED LOT NUMBER — 100
- ZONING BOUNDARY

NO.	DATE	REVISION
2	4-25-22	REVISED PER NLT, LEB. CO. ENGINEER & CITY OF LEB. AUTHORITY
1	2-1-22	REVISED PER NLT, LEB. CO. ENGINEER, LCPD, NLTMA, & CITY OF LEB. AUTHORITY

FOR PIONEER MANAGEMENT BY:

MANAGER: JAMES C. HENKE
DESIGN BY: JDB/KWG
CHKD BY: JDB/JCH
SURV. CHIEF: RC
DRAWN BY: RC
FIELDBOOK NO. VALUE
CHKD BY: RC

DRAWING REFERENCE: F:\12\12-0950-02\CAD\Final-Phs4\Layout.dwg

XREFS:

CLIENT
LANDMARK HOMES AT SWEETBRIAR
c/o MR. CLIFF WEAVER
1737 WEST MAIN STREET
EPHRATA, PA 17522
(717) 733-1536

SCALE 1" = 50'

PIONEER Management, LLC
111 Millersville Road, Lancaster, PA 17603
Phone (717) 481-5500 • Fax (717) 481-4955
Email: jnpioneermanagementllc.com
Website: www.pioneermanagementllc.com

LAYOUT PLAN

FINAL PHASE 4 & REVISED FINAL PHASE 3 SUBDIVISION PLAN

FOR

THE CROSSINGS AT SWEET BRIAR

NORTH LEBANON TOWNSHIP LEBANON COUNTY, PA

DATE: JUNE 25, 2021

SHEET NO. 8 OF 43

DWG. NO. 12-0950-02-F

F:\12\12-0950-02\CAD\Final\Easement.dwg, 9 EASEMENT PLAN, 6/7/2022 2:23:36 PM, 1:1

SEE SHEET 15 FOR EASEMENT LINE & CURVE CHARTS.

KIMMERLINGS ROAD (T-805)

MARCON DRIVE

BRIAR ROSE AVE

BELLA MAY CIRCLE

BELLA MAY CIRCLE

MATCHLINE SEE SHEET 10

MATCHLINE SEE SHEET 11

CLAYTON R & EILEEN F GEORGE DEED BOOK 31, PAGE 522

TERRY L & AUDREY K ZELLERS DEED BOOK 256, PAGE 672

ROBERT J & VALERIE J CARROLL DEED BOOK 2009, PAGE 3157

MICHAEL F & TAHIA A ARNICK DEED BOOK 301, PAGE 757

TEMPORARY CONSTRUCTION/ UTILITY/SNOW DROP EASEMENT

EXISTING TEMPORARY CONSTRUCTION/ UTILITY/SNOW DROP EASEMENT TO BE VACATED

EX. DRAINAGE EASEMENT

EX. 80'ø STORM TURN-AROUND AREA

DRAINAGE EASEMENT

SIGN ESMT.

N O R T H

SHEET 11
SHEET 9
SHEET 18
SHEET 16
SHEET 17
SHEET 10
SHEET 12
SHEET 14
SHEET 13

KEY MAP

SCALE: 1"=1000'

LEGEND

- EXISTING WETLANDS BOUNDARY
- EXISTING ADJOINER LINE
- EXISTING BOUNDARY LINE
- EXISTING CENTERLINE
- PROPOSED CENTERLINE
- EXISTING EDGE OF CARTWAY
- PROPOSED EDGE OF PAVEMENT/CURB
- EXISTING RIGHT-OF-WAY LINE
- PROPOSED RIGHT-OF-WAY LINE
- PROPOSED LOT LINE
- EXISTING EASEMENT LINE
- PROPOSED EASEMENT LINE
- PROPOSED CLEAR SIGHT TRIANGLE (C.S.T.)
- EXISTING FENCE
- EXISTING GUIDE RAIL
- EXISTING RIPARIAN BARRIER
- PROPOSED FENCE
- PROPOSED GUIDE RAIL
- PROPOSED RIPARIAN BARRIER
- EXISTING SIGN
- PROPOSED SIGNS
- EXISTING LOT MARKER
- BENCHMARK
- EXISTING VEGETATION (SHRUB, TREE)
- EXISTING TREELINE/BRUSHLINE
- PROPOSED TREELINE
- EXISTING UTILITY POLE W/ GUY WIRE
- EXISTING OVERHEAD ELECTRIC
- EXISTING UNDERGROUND ELECTRIC
- EXISTING ELECTRIC BOX
- EXISTING LIGHT
- PROPOSED STREET LIGHT
- EXISTING WATERLINE
- EXISTING WATER VALVE
- EXISTING FIRE HYDRANT
- EXISTING SANITARY SEWER MANHOLE
- EXISTING GRAVITY SANITARY SEWER
- EXISTING STORM PIPE
- EXISTING STORM MANHOLE
- EXISTING STORM INLET
- EXISTING STORM HEADWALL/ENDWALL
- EXISTING GAS LINE
- EXISTING GAS VALVE
- PROPOSED PAVED PATH
- PROPOSED CONCRETE SIDEWALK
- PROPOSED LOT NUMBER (100)
- ZONING BOUNDARY
- PROPOSED DRAINAGE EASEMENT
- PROPOSED PATHWAY EASEMENT
- PROPOSED SANITARY SEWER EASEMENT
- PROPOSED PRIVATE UTILITY EASEMENT (FOR LOTS 64, 65 & 66 ACCESS)
- BRIAR RIDGE DEVELOPMENT SANITARY SEWER EASEMENT (NOT PROPOSED AS A PART OF SWEET BRIAR PLANS)
- AREA OF EXISTING CONSERVATION EASEMENT
- EXISTING EASEMENT TO BE VACATED
- EASEMENT TIE-DOWN

NO.	DATE	REVISION
2	4-25-22	REVISED PER NLT, LEB. CO. ENGINEER & CITY OF LEB. AUTHORITY
1	2-1-22	REVISED PER NLT, LEB. CO. ENGINEER, LCPD, NLTMA, & CITY OF LEB. AUTHORITY

FOR PIONEER MANAGEMENT BY:

FIELDBOOK NO. VALUE
SURV. CHIEF: RC
DRAWN BY: RC
CHKD BY: RC

MANAGER: JAMES C. HENKE
DESIGN BY: JDB/KWG
CHKD BY: JDB/JCH

DRAWING REFERENCE: F:\12\12-0950-02\CAD\Final\Easement.dwg

XREFS:
TB: [F:\12\12-0950-02\CAD\Final\A-xref\A-TB.dwg]
Title Block: [F:\12\12-0950-02\CAD\Final\A-xref\A-Title Block.dwg]
X-Base: [F:\12\12-0950-02\CAD\Final\A-xref\X-Base.dwg]
Pre-Base: [F:\12\12-0950-02\CAD\Final\A-xref\Pre-Base.dwg]
Pre-Base-Ph3: [F:\12\12-0950-02\CAD\Final\A-xref\Pre-Base-Ph3.dwg]
Pre-Base-Ph4: [F:\12\12-0950-02\CAD\Final\A-xref\Pre-Base-Ph4.dwg]
Pre-Base-Ph4 LCD: [F:\12\12-0950-02\CAD\Final\A-xref\Pre-Base-Ph4 LCD.dwg]
Base: [F:\12\12-0950-02\CAD\Final\A-xref\Base.dwg]
Base-Ph3: [F:\12\12-0950-02\CAD\Final\A-xref\Base-Ph3.dwg]
Base-Ph4: [F:\12\12-0950-02\CAD\Final\A-xref\Base-Ph4.dwg]
Base-Ph4 LCD: [F:\12\12-0950-02\CAD\Final\A-xref\Base-Ph4 LCD.dwg]
Easement: [F:\12\12-0950-02\CAD\Final\A-xref\Easement.dwg]
Easement-Ph3: [F:\12\12-0950-02\CAD\Final\A-xref\Easement-Ph3.dwg]
Easement-Ph4: [F:\12\12-0950-02\CAD\Final\A-xref\Easement-Ph4.dwg]
Easement-Ph4 LCD: [F:\12\12-0950-02\CAD\Final\A-xref\Easement-Ph4 LCD.dwg]
Easement-Base: [F:\12\12-0950-02\CAD\Final\A-xref\Easement-Base.dwg]
Easement-Base-Ph3: [F:\12\12-0950-02\CAD\Final\A-xref\Easement-Base-Ph3.dwg]
Easement-Base-Ph4: [F:\12\12-0950-02\CAD\Final\A-xref\Easement-Base-Ph4.dwg]
Easement-Base-Ph4 LCD: [F:\12\12-0950-02\CAD\Final\A-xref\Easement-Base-Ph4 LCD.dwg]

CLIENT
LANDMARK HOMES AT SWEETBRIAR
c/o MR. CLIFF WEAVER
1737 WEST MAIN STREET
EPHRATA, PA 17522
(717) 733-1536

SCALE: 1" = 30'
0 15' 30' 60' 90'

PIONEER Management, LLC
111 Millersville Road, Lancaster, PA 17603
Phone: (717) 435-8300 Fax: (717) 481-4955
Email: jvb@pioneermanagementllc.com
Website: www.pioneermanagementllc.com

EASEMENT PLAN
FINAL PHASE 4 & REVISED FINAL PHASE 3 SUBDIVISION PLAN
FOR
THE CROSSINGS AT SWEET BRIAR
NORTH LEBANON TOWNSHIP LEBANON COUNTY, PA

DATE: JUNE 25, 2021
SHEET NO. 9 OF 43
DWG. NO. 12-0950-02-F

F:\12\12-0950-02\CAD\Final\Easement.dwg, EASEMENT PLAN, 6/7/2021 2:23:42 PM, 1:1

LEGEND

- EXISTING WETLANDS BOUNDARY
- EXISTING ADJOINER LINE
- EXISTING BOUNDARY LINE
- EXISTING CENTERLINE
- PROPOSED CENTERLINE
- EXISTING EDGE OF CARTWAY
- PROPOSED EDGE OF PAVEMENT/CURB
- EXISTING RIGHT-OF-WAY LINE
- PROPOSED RIGHT-OF-WAY LINE
- PROPOSED LOT LINE
- EXISTING EASEMENT LINE
- PROPOSED EASEMENT LINE
- PROPOSED CLEAR SIGHT TRIANGLE (C.S.T.)
- EXISTING FENCE
- EXISTING GUIDE RAIL
- EXISTING RIPARIAN BARRIER
- PROPOSED FENCE
- PROPOSED GUIDE RAIL
- PROPOSED RIPARIAN BARRIER
- EXISTING SIGN
- PROPOSED SIGNS
- EXISTING LOT MARKER
- BENCHMARK
- EXISTING VEGETATION (SHRUB, TREE)
- EXISTING TREELINE/BRUSHLINE
- PROPOSED TREELINE
- EXISTING UTILITY POLE W/ GUY WIRE
- EXISTING OVERHEAD ELECTRIC (OE)
- EXISTING UNDERGROUND ELECTRIC (UE)
- EXISTING ELECTRIC BOX (E)
- EXISTING LIGHT
- PROPOSED STREET LIGHT
- EXISTING WATERLINE (W)
- EXISTING WATER VALVE (WV)
- EXISTING FIRE HYDRANT
- EXISTING SANITARY SEWER MANHOLE (S)
- EXISTING GRAVITY SANITARY SEWER (CMP)
- EXISTING STORM PIPE
- EXISTING STORM MANHOLE
- EXISTING STORM INLET
- EXISTING STORM HEADWALL/ENDWALL
- EXISTING GAS LINE (G)
- EXISTING GAS VALVE (GV)
- PROPOSED PAVED PATH
- PROPOSED CONCRETE SIDEWALK
- PROPOSED LOT NUMBER (100)
- ZONING BOUNDARY
- PROPOSED DRAINAGE EASEMENT
- PROPOSED PATHWAY EASEMENT
- PROPOSED SANITARY SEWER EASEMENT
- PROPOSED PRIVATE UTILITY EASEMENT (FOR LOTS 64, 65 & 66 ACCESS)
- BRIAR RIDGE DEVELOPMENT SANITARY SEWER EASEMENT (NOT PROPOSED AS A PART OF SWEET BRIAR PLANS)
- AREA OF EXISTING CONSERVATION EASEMENT
- EXISTING EASEMENT TO BE VACATED
- EASEMENT TIE-DOWN

SEE SHEET 15 FOR EASEMENT LINE & CURVE CHARTS.

SEE SHEET 9 MATCHLINE

MATCHLINE SEE SHEET 12

MATCHLINE SEE SHEET 11

EXISTING CARTWAY 21' ± WIDE

8' DY/4" MET ED POLE 3194-38006 OHW

3' WV

12" TREE

GRAVEL DRIVEWAY OHW

WATER LATERAL

MET ED POLE 37502-38002

SAN MH RIM=664.29 INV=650.80

MICHAEL F & TAHIA A ARNICK DEED BOOK 301, PAGE 757

STEEL PIN FOUND ELEV. 666.31

STEEL PIN FOUND ELEV. 662.18

TREE ROW

POST & WOODEN RAIL FENCE

MICHAEL S. WARFIELD JR. DEED BOOK 2274, PAGE 8401

R-1 R-2

DRAINAGE EASEMENT

D304 D303 D306 D307 D308 D305 D102 D103 D104 D105 D106 D107 D108 D109 D110 D111 D112 D113 D114 D115 D116 D117 D118 D119 D120 D121 D122 D123 D124 D125 D126 D127

157.87' S70°38'22"E

S87°11'30"E 104.04'

N76°15'23"E 94.40'

N72°10'53"E 105.09'

20'

50' R.O.W.

D015 D013 D014 99.45' N44°19'19"W S44°21'17"E 83.14'

BELLA MAY

83 82 81 80 79 78 77 76 75 74 93 92 91 90 89 94 95 112 111 110 109 108 107 106

TEMPORARY CONSTRUCTION/ UTILITY/SNOW DROP EASEMENT

OPEN SPACE TRACT 'E'

S16°17'38"W 15.48'

D18 D17 D21 P216 P219 P211 D20 P215 D309 P221 D19 P300 D312 P210 D310 P207 D311 P213 P209 P50

DRAINAGE EASEMENT

10' WIDE PATH EASEMENT

LILLIANA DRIVE

75' C.S.T.

75' C.S.T.

SHEET 11 SHEET 18 SHEET 9 SHEET 16 SHEET 17 SHEET 10 SHEET 12 SHEET 14 SHEET 13

KEY MAP

SCALE: 1"=1000'

NO.	DATE	REVISION
2	4-25-22	REVISED PER NLT, LEB. CO. ENGINEER & CITY OF LEB. AUTHORITY
1	2-1-22	REVISED PER NLT, LEB. CO. ENGINEER, LCPD, NLTMA, & CITY OF LEB. AUTHORITY

FOR PIONEER MANAGEMENT BY:

FIELDBOOK NO. VALUE

CHKD BY: RC

DRAWN BY: RC

SURV. CHIEF: RC

CHKD BY: JDB/JCH

DESIGN BY: JDB/KWG

MANAGER: JAMES C. HENKE

DRAWING REFERENCE: F:\12\12-0950-02\CAD\Final\Easement.dwg

XREFS:
TB: [F:\12\12-0950-02\CAD\Final\A-xref\A-TB.dwg]
Base: [F:\12\12-0950-02\CAD\Final\A-xref\A-Base.dwg]
Easement: [F:\12\12-0950-02\CAD\Final\A-xref\A-Easement-Base.dwg]
Plat: [F:\12\12-0950-02\CAD\Final\A-xref\A-Plat-Base.dwg]
Plat Match: [F:\12\12-0950-02\CAD\Final\A-xref\A-Plat-Match-Base.dwg]
Plat Key: [F:\12\12-0950-02\CAD\Final\A-xref\A-Plat-Key-Base.dwg]
Plat Match Key: [F:\12\12-0950-02\CAD\Final\A-xref\A-Plat-Match-Key-Base.dwg]
Easement Match: [F:\12\12-0950-02\CAD\Final\A-xref\A-Easement-Match-Base.dwg]
Easement Key: [F:\12\12-0950-02\CAD\Final\A-xref\A-Easement-Key-Base.dwg]
Easement Match Key: [F:\12\12-0950-02\CAD\Final\A-xref\A-Easement-Match-Key-Base.dwg]
Easement Curve: [F:\12\12-0950-02\CAD\Final\A-xref\A-Easement-Curve-Base.dwg]
Easement Curve Match: [F:\12\12-0950-02\CAD\Final\A-xref\A-Easement-Curve-Match-Base.dwg]

CLIENT
LANDMARK HOMES AT SWEETBRIAR
c/o MR. CLIFF WEAVER
1737 WEST MAIN STREET
EPHRATA, PA 17522
(717) 733-1536

SCALE: 1" = 30' (0, 15', 30', 60', 90')

PIONEER Management, LLC
111 Millersville Road, Lancaster, PA 17603
Phone: (717) 435-8300 Fax: (717) 481-4955
Email: jrb@pioneermanagementllc.com
Website: www.pioneermanagementllc.com

EASEMENT PLAN

FINAL PHASE 4 & REVISED FINAL PHASE 3 SUBDIVISION PLAN
FOR
THE CROSSINGS AT SWEET BRIAR
NORTH LEBANON TOWNSHIP LEBANON COUNTY, PA

DATE: JUNE 25, 2021

SHEET NO. 10 OF 43

DWG. NO. 12-0950-02-F

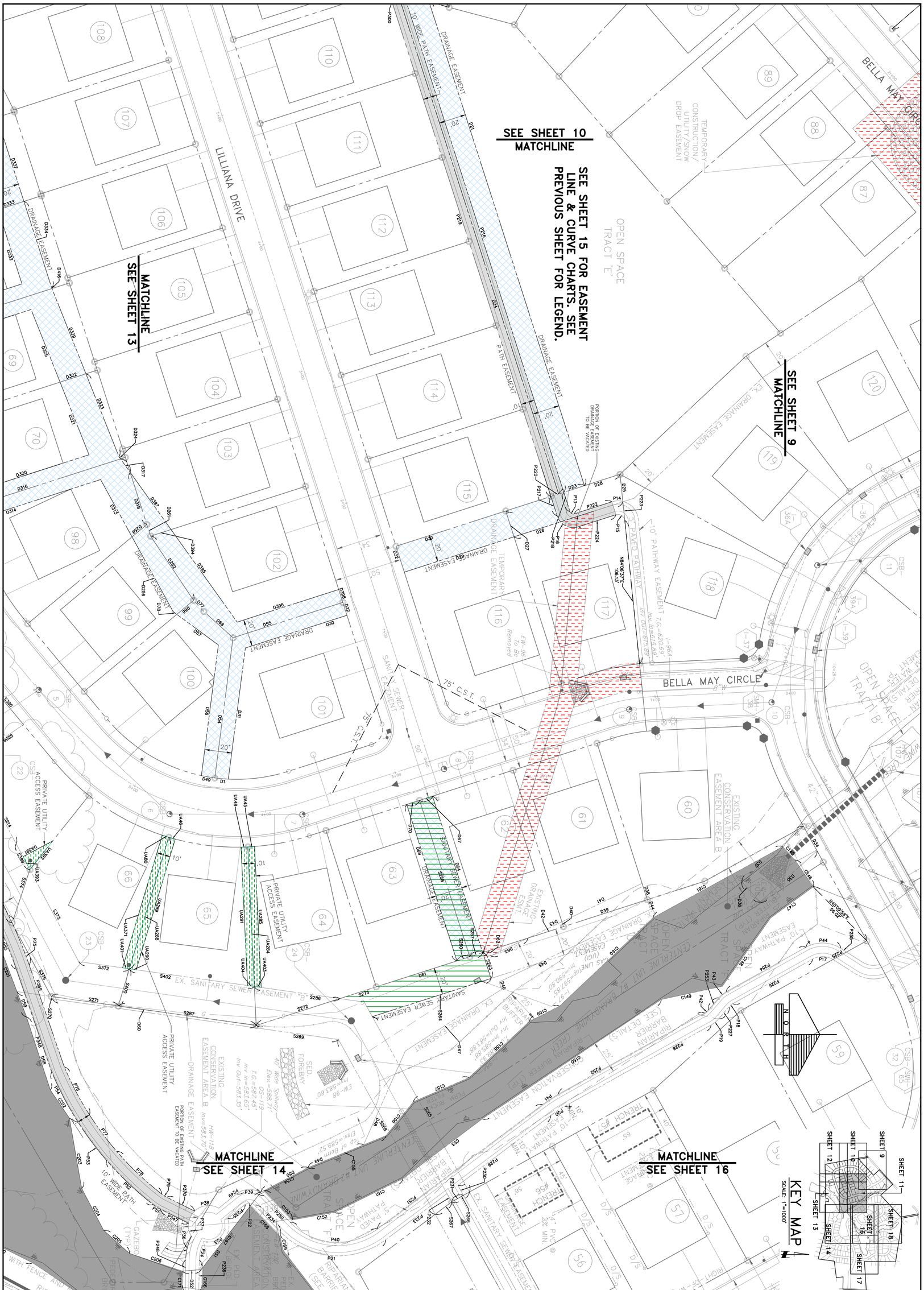

EASEMENT PLAN

FINAL PHASE 4 & REVISED FINAL PHASE 3 SUBDIVISION PLAN

FOR

THE CROSSINGS AT SWEET BRIAR

NORTH LEBANON TOWNSHIP LEBANON COUNTY, PA

DWG. NO. 12-0950-02-E | SHEET NO. 11 OF 43 | DATE: JUNE 25, 2021

PIONEER Management, LLC
111 Millersville Road, Lancaster, PA 17603
Phone (717) 481-5500 · Fax (717) 481-4955
Email: info@pioneermanagementllc.com
Website: www.pioneermanagementllc.com

CLIENT
LANDMARK HOMES AT SWEETBRIAR
c/o MR. CLIFF WEAVER
1737 WEST MAIN STREET
EPHRATA, PA 17522
(717) 733-1536

SCALE 1" = 30' (0, 15', 30', 60', 90')

MANAGER: JAMES C. HENKE		SURV. CHIEF: RC	FIELDBOOK NO. VALUE	FOR PIONEER MANAGEMENT BY:
DESIGN BY: JDB/KWG	CHKD BY: JDB/JCH	DRAWN BY: RC	CHKD BY: RC	

DRAWING REFERENCE: F:\12\12-0950-02\CAD\Final-PH4\Easement.dwg

XREFS:
TB [F:\12\12-0950-02\CAD\Final-PH4\X-refs\TB.dwg]
Key Map [F:\12\12-0950-02\CAD\Final-PH4\X-refs\KeyMap.dwg]
X-Base [F:\12\12-0950-02\CAD\Final-PH4\X-refs\X-Base.dwg]
Easmt-Dim-Base [F:\12\12-0950-02\CAD\Final-PH4\LCD Bases\Easmt-Dim-Base.dwg]
P-Base [F:\12\12-0950-02\CAD\Final-PH4\X-refs\P-Base.dwg]
PH1-AB-block [F:\12\12-0950-02\CAD\Final-PH4\X-refs\PH1-AB-block.dwg]
PH1-DE-block [F:\12\12-0950-02\CAD\Final-PH4\X-refs\PH1-DE-block.dwg]
Street-Alignments-Base [F:\12\12-0950-02\CAD\Final-PH4\LCD Bases\Street-Alignments-Base.dwg]
PH2-AB-block [F:\12\12-0950-02\CAD\Final-PH4\X-refs\PH2-AB-block.dwg]
Easmt-Dim-Base-PH3 [F:\12\12-0950-02\CAD\Final-PH4\LCD Bases\Easmt-Dim-Base-PH3.dwg]

NO.	DATE	REVISION
2	4-25-22	REVISED PER NLT, LEB. CO. ENGINEER & CITY OF LEB. AUTHORITY
1	2-1-22	REVISED PER NLT, LEB. CO. ENGINEER, LCPD, NLTMA, & CITY OF LEB. AUTHORITY

F:\12\12-0950-02\CAD\Final\Easement.dwg, 12 EASEMENT PLAN, 6/7/2022 2:23:53 PM, 1:1

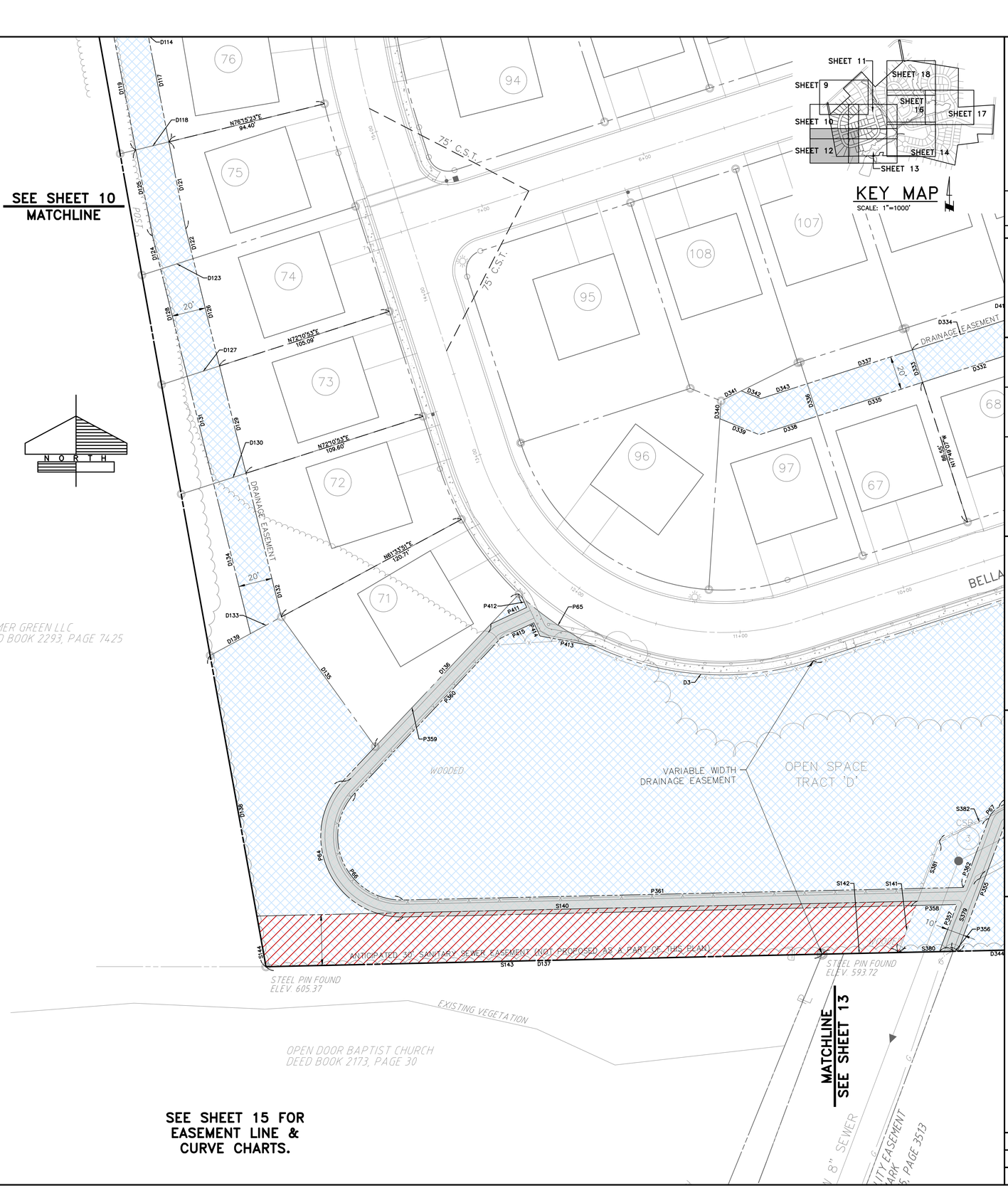

NO.	DATE	REVISION
2	4-25-22	REVISED PER NLT, LEB. CO. ENGINEER & CITY OF LEB. AUTHORITY
1	2-1-22	REVISED PER NLT, LEB. CO. ENGINEER, LCPD, NLTMA, & CITY OF LEB. AUTHORITY

FOR PIONEER MANAGEMENT BY:

FIELDBOOK NO.
VALUE

SURV. CHIEF:
RC

DRAWN BY:
RC

CHKD BY:
RC

MANAGER:
JAMES C. HENKE

DESIGN BY:
JDB/KWG

CHKD BY:
JDB/JCH

DRAWING REFERENCE:
F:\12\12-0950-02\CAD\Final\Easement.dwg

XREFS:

TB: [F:\12\12-0950-02\CAD\Final\X-ref\TB.dwg]
Fence: [F:\12\12-0950-02\CAD\Final\X-ref\Fence.dwg]
Fence: [F:\12\12-0950-02\CAD\Final\X-ref\Fence-Block.dwg]
Fence: [F:\12\12-0950-02\CAD\Final\X-ref\Fence-Dim-Block.dwg]
Fence: [F:\12\12-0950-02\CAD\Final\X-ref\Fence-Dim-Base.dwg]
Pond: [F:\12\12-0950-02\CAD\Final\X-ref\Pond.dwg]
Pond: [F:\12\12-0950-02\CAD\Final\X-ref\Pond-Block.dwg]
Pond: [F:\12\12-0950-02\CAD\Final\X-ref\Pond-Dim-Block.dwg]
Pond: [F:\12\12-0950-02\CAD\Final\X-ref\Pond-Dim-Base.dwg]
Pond: [F:\12\12-0950-02\CAD\Final\X-ref\Pond-Dim-Base-Pts3.dwg]
Easement: [F:\12\12-0950-02\CAD\Final\X-ref\Easement.dwg]
Easement-Block: [F:\12\12-0950-02\CAD\Final\X-ref\Easement-Block.dwg]
Easement-Dim: [F:\12\12-0950-02\CAD\Final\X-ref\Easement-Dim.dwg]
Easement-Dim-Block: [F:\12\12-0950-02\CAD\Final\X-ref\Easement-Dim-Block.dwg]
Easement-Dim-Base: [F:\12\12-0950-02\CAD\Final\X-ref\Easement-Dim-Base.dwg]
Easement-Dim-Base-Pts3: [F:\12\12-0950-02\CAD\Final\X-ref\Easement-Dim-Base-Pts3.dwg]

CLIENT
LANDMARK HOMES AT SWEETBRIAR
c/o MR. CLIFF WEAVER
1737 WEST MAIN STREET
EPHRATA, PA 17522
(717) 733-1536

SCALE
1" = 30'
0 15' 30' 60' 90'

PIONEER
Management, LLC
111 Millersville Road, Lancaster, PA 17603
Phone: (717) 435-8300 Fax: (717) 481-4955
Email: jb@pioneermanagementllc.com
Website: www.pioneermanagementllc.com

EASEMENT PLAN
FINAL PHASE 4 & REVISED FINAL
PHASE 3 SUBDIVISION PLAN
FOR
THE CROSSINGS AT SWEET BRIAR
NORTH LEBANON TOWNSHIP LEBANON COUNTY, PA

DATE: JUNE 25, 2021

SHEET NO. 12 OF 43

DWG. NO. 12-0950-02-F

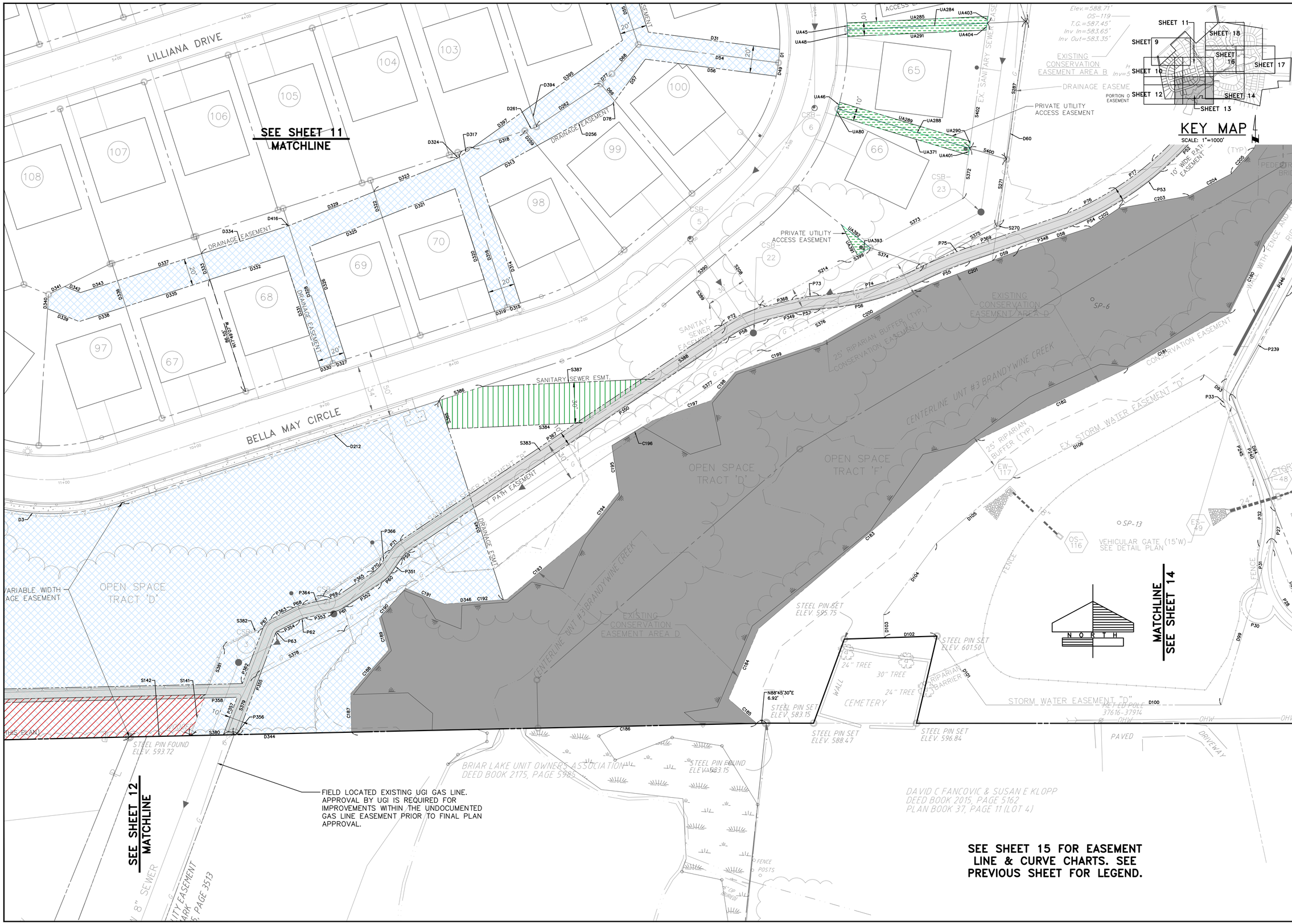

NO.	DATE	REVISION
2	4-25-22	REVISED PER NLT, LEB. CO. ENGINEER & CITY OF LEB. AUTHORITY
1	2-1-22	REVISED PER NLT, LEB. CO. ENGINEER, LCPD, NLTMA, & CITY OF LEB. AUTHORITY

FOR PIONEER MANAGEMENT BY:

MANAGER: JAMES C. HENKE
DESIGN BY: JDB/KWG
CHKD BY: JDB/JCH
SURV. CHIEF: RC
DRAWN BY: RC
FIELDBOOK NO. VALUE
CHKD BY: RC
DRAWING REFERENCE: F:\12\12-0950-02\CAD\Final-Phs4\Easement.dwg
XREFS:

CLIENT
LANDMARK HOMES AT SWEETBRIAR
c/o MR. CLIFF WEAVER
1737 WEST MAIN STREET
EPHRATA, PA 17522
(717) 733-1536

SCALE 0 15' 30' 1" = 30' 60' 90'

PIONEER Management, LLC
111 Millersville Road, Lancaster, PA 17603
Phone (717) 481-5500 • Fax (717) 481-4955
Email: info@pioneermanagementllc.com
Website: www.pioneermanagementllc.com

EASEMENT PLAN
FINAL PHASE 4 & REVISED FINAL PHASE 3 SUBDIVISION PLAN
FOR
THE CROSSINGS AT SWEET BRIAR
NORTH LEBANON TOWNSHIP LEBANON COUNTY, PA

DATE: JUNE 25, 2021
SHEET NO. 13 OF 43
DWG. NO. 12-0950-02-F

F:\12\12-0950-02\CAD\Final\Final Easement.dwg, 24 EASEMENT PLAN, 6/7/2021 2:24:54 PM, 1:1

SEE SHEET 16
MATCHLINE

SEE SHEET 11
MATCHLINE

SEE SHEET 13
MATCHLINE

SEE SHEET 15 FOR EASEMENT LINE & CURVE CHARTS.

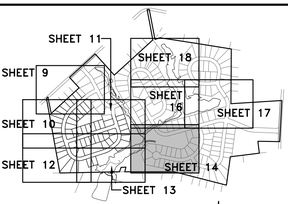

KEY MAP
SCALE: 1"=1000'

LEGEND

- EXISTING WETLANDS BOUNDARY
- EXISTING ADJOINER LINE
- EXISTING BOUNDARY LINE
- EXISTING CENTERLINE
- PROPOSED CENTERLINE
- EXISTING EDGE OF CARTWAY
- PROPOSED EDGE OF PAVEMENT/CURB
- EXISTING RIGHT-OF-WAY LINE
- PROPOSED RIGHT-OF-WAY LINE
- PROPOSED LOT LINE
- EXISTING EASEMENT LINE
- PROPOSED EASEMENT LINE
- PROPOSED CLEAR SIGHT TRIANGLE (C.S.T.)
- EXISTING FENCE
- EXISTING GUIDE RAIL
- EXISTING RIPARIAN BARRIER
- PROPOSED FENCE
- PROPOSED GUIDE RAIL
- PROPOSED RIPARIAN BARRIER
- EXISTING SIGN
- PROPOSED SIGNS
- EXISTING LOT MARKER
- BENCHMARK
- EXISTING VEGETATION (SHRUB, TREE)
- EXISTING TREELINE/BRUSHLINE
- PROPOSED TREELINE
- EXISTING UTILITY POLE W/ GUY WIRE
- EXISTING OVERHEAD ELECTRIC
- EXISTING UNDERGROUND ELECTRIC
- EXISTING ELECTRIC BOX
- EXISTING LIGHT
- PROPOSED STREET LIGHT
- EXISTING WATERLINE
- EXISTING WATER VALVE
- EXISTING FIRE HYDRANT
- EXISTING SANITARY SEWER MANHOLE
- EXISTING GRAVITY SANITARY SEWER
- EXISTING STORM PIPE
- EXISTING STORM MANHOLE
- EXISTING STORM INLET
- EXISTING STORM HEADWALL/ENDWALL
- EXISTING GAS LINE
- EXISTING GAS VALVE
- PROPOSED PAVED PATH
- PROPOSED CONCRETE SIDEWALK
- PROPOSED LOT NUMBER (100)
- ZONING BOUNDARY
- PROPOSED DRAINAGE EASEMENT
- PROPOSED PATHWAY EASEMENT
- PROPOSED SANITARY SEWER EASEMENT
- PROPOSED PRIVATE UTILITY EASEMENT (FOR LOTS 64, 65 & 66 ACCESS)
- BRIAR RIDGE DEVELOPMENT SANITARY SEWER EASEMENT (NOT PROPOSED AS A PART OF SWEET BRIAR PLANS)
- AREA OF EXISTING CONSERVATION EASEMENT
- EXISTING EASEMENT TO BE VACATED
- EASEMENT TIE-DOWN

NO.	DATE	REVISION
2	4-25-22	REVISED PER NLT. LEB. CO. ENGINEER & CITY OF LEB. AUTHORITY
1	2-1-22	REVISED PER NLT. LEB. CO. ENGINEER, LCPD, NLTMA, & CITY OF LEB. AUTHORITY

FOR PIONEER MANAGEMENT BY:

FIELDBOOK NO.: VALUE
SURV. CHIEF: RC
DRAWN BY: RC
CHKD BY: RC

MANAGER: JAMES C. HENKE
DESIGN BY: JDB/KWG
CHKD BY: JDB/JCH

DRAWING REFERENCE:
F:\12\12-0950-02\CAD\Final-Ph4\Easement.dwg

XREFS:
Tie (F:\12\12-0950-02\CAD\Final-Ph4\X-ref\Tie.dwg)
Ex-Base (F:\12\12-0950-02\CAD\Final-Ph4\X-ref\Ex-Base.dwg)
Ex-Base (F:\12\12-0950-02\CAD\Final-Ph4\X-ref\Ex-Base-Block.dwg)
Pro-Base (F:\12\12-0950-02\CAD\Final-Ph4\X-ref\Pro-Base.dwg)
Pro-Base (F:\12\12-0950-02\CAD\Final-Ph4\X-ref\Pro-Base-Block.dwg)
Easement (F:\12\12-0950-02\CAD\Final-Ph4\X-ref\Easement.dwg)
Easement-Block (F:\12\12-0950-02\CAD\Final-Ph4\X-ref\Easement-Block.dwg)
Ex-Con-Base-Ph3 (F:\12\12-0950-02\CAD\Final-Ph4\LDP Base\Ex-Con-Base-Ph3.dwg)
Ex-Con-Base-Ph4 (F:\12\12-0950-02\CAD\Final-Ph4\LDP Base\Ex-Con-Base-Ph4.dwg)

CLIENT
LANDMARK HOMES AT SWEETBRIAR
c/o MR. CLIFF WEAVER
1737 WEST MAIN STREET
EPHRATA, PA 17522
(717) 733-1536

SCALE
1" = 30'
0 15' 30' 60' 90'

PIONEER
Management, LLC
711 Millersville Road, Lancaster, PA 17603
Phone: 717-481-4955 Fax: 717-481-4955
Email: JK@pioneermanagementllc.com
Website: www.pioneermanagementllc.com

EASEMENT PLAN
FINAL PHASE 4 & REVISED FINAL
PHASE 3 SUBDIVISION PLAN
FOR
THE CROSSINGS AT SWEET BRIAR
NORTH LEBANON TOWNSHIP LEBANON COUNTY, PA.

DATE: JUNE 25, 2021
SHEET NO. 14 OF 43
DWG. NO. 12-0950-02-F

F:\12\12-0950-02\CAD\Final-Ph4\Easement.dwg, 15 EASEMENT PLAN - LINE & CURVE CHARTS, 6/7/2022 2:24:09 PM, 1:1

DRAINAGE ESMT.

LINE #	LENGTH	BEARING
D1	20.50'	N44°24'49"W
D2	66.15'	N51°15'46"E
D3	20.01'	S40°47'09"E
D4	63.63'	S51°15'46"W
D5	1.27'	S32°53'02"W
D6	70.04'	S51°15'46"W
D7	20.01'	S40°47'09"E
D8	70.04'	N51°15'46"E
D9	70.04'	S51°15'46"W
D10	20.01'	N40°47'09"W
D11	70.04'	N51°15'46"E
D12	7.17'	S51°15'46"W
D13	67.74'	S48°39'37"W
D14	20.03'	N44°32'17"W
D15	69.31'	N48°39'37"E
D16	6.91'	N51°15'46"E
D17	21.03'	N72°10'53"E
D18	24.16'	N16°17'38"E
D19	4.85'	S72°10'53"W
D20	66.41'	N57°11'13"E
D21	374.89'	N72°10'53"E
D22	10.00'	N72°10'53"E
D23	20.00'	S17°49'07"E
D24	388.44'	S72°10'53"W
D25	20.44'	N84°06'37"E
D26	84.32'	S17°49'07"E
D27	20.00'	S72°10'53"W
D28	88.55'	N17°49'07"W
D29	85.00'	S17°49'07"E
D30	78.71'	S17°49'07"E
D31	97.48'	S82°34'31"E
D32	20.00'	S72°10'53"W
D33	85.00'	N17°49'07"W
D34	20.53'	N61°01'04"E
D35	56.53'	S41°59'30"E
D36	20.00'	S48°00'30"W
D37	61.15'	N41°59'30"W
D38	12.64'	N72°10'53"E
D39	65.00'	S17°49'07"E
D40	3.76'	N72°10'53"E
D41	65.60'	N25°35'53"W
D42	27.54'	S17°49'07"E
D43	27.80'	N25°35'53"W
D44	7.54'	N72°10'53"E
D45	123.64'	S25°35'53"E
D46	5.74'	N72°10'53"E
D47	84.31'	S32°36'47"E
D48	75.74'	S65°59'40"E
D49	44.24'	S22°18'19"E
D50	39.25'	S27°31'50"E
D51	72.04'	S52°20'32"E
D52	13.87'	S04°32'41"E
D54	104.22'	N82°34'31"W
D55	85.05'	N17°49'07"W
D56	97.10'	N82°34'31"W
D57	38.11'	S36°20'47"W
D58	56.74'	S71°56'53"W
D59	20.02'	S69°17'30"W
D60	178.21'	N08°03'18"E
D61	180.50'	N17°49'07"W
D62	4.09'	N72°10'53"E
D63	30.24'	N25°35'53"W
D64	121.12'	N72°10'53"E
D66	16.12'	N39°46'01"W
D67	10.00'	N17°49'07"W
D68	28.95'	N41°54'36"E
D69	121.12'	S72°10'53"W
D70	10.00'	N17°49'07"W
D71	52.29'	S66°56'46"W
D72	25.13'	N28°58'56"W
D73	54.89'	N66°56'46"E
D74	25.00'	S23°03'14"E
D75	26.00'	S28°58'56"E
D76	239.95'	N74°49'53"E
D77	11.14'	N47°18'44"E
D78	3.34'	S36°20'47"W
D79	56.15'	S71°52'49"W
D80	351.06'	N78°25'10"W
D81	36.33'	N85°08'24"W
D82	4.57'	N73°35'29"W
D83	30.00'	N16°24'31"E
D84	32.95'	S73°35'29"E
D85	25.82'	N01°10'59"W
D86	99.47'	N84°15'36"W
D87	23.56'	S79°18'19"W
D88	32.26'	N31°51'25"W
D89	24.46'	N15°05'55"W
D90	21.67'	N02°32'33"E
D91	52.53'	N44°23'50"E
D92	96.14'	N52°08'24"E
D93	24.23'	N53°36'21"W
D94	152.94'	N20°58'48"W
D95	258.58'	N78°25'10"W
D96	128.55'	S87°22'12"E
D97	130.69'	S78°25'10"E
D98	60.13'	S20°58'48"E
D99	128.20'	N16°47'59"E
D100	173.20'	N90°00'00"E
D101	62.63'	S35°40'01"E
D102	38.45'	N87°58'14"E

DRAINAGE ESMT.

LINE #	LENGTH	BEARING
D103	17.03'	S01°51'32"E
D104	65.44'	S36°31'13"W
D105	74.70'	S49°21'06"W
D106	159.64'	S61°40'36"W
D107	91.82'	N07°19'30"W
D108	88.43'	S07°19'30"E
D109	80.26'	S07°19'30"E
D110	20.32'	S87°11'30"E
D111	83.34'	N07°19'30"W
D112	21.08'	S78°54'56"E
D113	76.19'	S07°19'30"E
D114	20.01'	S84°31'56"W
D115	79.12'	N07°19'30"W
D116	1.90'	S07°19'30"E
D117	73.20'	S10°57'57"E
D118	20.02'	N76°15'23"E
D119	74.80'	N10°57'57"W
D120	3.19'	N07°19'30"W
D121	52.24'	S10°57'57"E
D122	18.08'	S13°50'39"E
D123	20.05'	N72°10'53"E
D124	19.97'	N13°50'39"W
D125	51.78'	N10°57'57"W
D126	65.16'	S13°50'39"E
D127	20.05'	N72°10'53"E
D128	65.16'	N13°50'39"W
D129	65.16'	S13°50'39"E
D130	20.05'	S72°10'53"W
D131	65.16'	N13°50'39"W
D132	87.20'	S13°50'39"E
D133	20.67'	S61°33'51"W
D134	91.02'	N13°50'39"W
D135	94.39'	S35°51'05"E
D136	123.58'	N43°17'38"E
D137	327.80'	S88°42'00"W
D138	186.43'	N10°10'14"W
D139	27.07'	N61°33'51"E
D212	245.13'	N72°10'53"E
D256	62.91'	S61°11'54"W
D259	14.24'	N39°46'01"W
D261	8.99'	N72°10'53"E
D262	56.98'	N56°12'37"E
D303	22.38'	N70°38'22"W
D304	4.19'	S07°19'30"E
D305	88.77'	S47°06'40"W
D306	3.96'	S07°19'30"E
D307	85.55'	S47°06'40"W
D308	21.21'	N62°21'48"W
D309	67.09'	S57°11'13"W
D310	58.61'	S75°57'59"W
D311	20.00'	N14°02'01"W
D312	55.30'	N75°57'59"E
D313	48.22'	S61°11'54"W
D314	97.60'	S17°49'07"E
D315	10.00'	S72°10'53"W
D316	116.31'	N17°49'07"W
D317	12.12'	N54°26'49"E
D318	40.47'	N72°10'53"E
D319	10.00'	S72°10'53"W
D320	95.10'	N17°49'07"W
D321	57.64'	S68°15'22"W
D322	20.05'	N17°49'07"W
D323	65.76'	N68°15'22"E
D324	1.99'	N54°26'49"E
D325	57.64'	S68°15'22"W
D326	87.21'	S17°49'07"E
D327	10.00'	S72°10'53"W
D328	106.57'	N17°49'07"W
D329	67.66'	N68°15'22"E
D330	10.00'	S72°10'53"W
D331	86.55'	N17°49'07"W
D332	57.50'	S72°10'58"W
D333	20.00'	N17°49'07"W
D334	67.16'	N72°10'58"E
D335	65.00'	S72°10'58"W
D336	20.00'	N17°49'07"W
D337	65.00'	N72°10'58"E
D338	36.09'	S72°10'58"W
D339	25.07'	N67°55'48"W
D340	10.54'	N03°43'13"E
D341	13.35'	N63°33'59"E
D342	12.29'	S67°55'48"E
D343	28.83'	N72°10'58"E
D344	163.72'	S88°45'30"W
D345	154.26'	N17°49'07"W
D346	43.56'	N85°51'16"E
D394	15.82'	S17°49'07"E
D395	83.87'	N54°26'49"E
D396	78.64'	N17°49'07"W
D397	51.93'	N54°26'49"E
D398	10.00'	N72°10'53"E
D416	0.34'	N68°15'22"E

SANITARY SEWER ESMT.

LINE #	LENGTH	BEARING
D64	121.12'	N72°10'53"E
D67	10.00'	N17°49'07"W
D69	121.12'	S72°10'53"W
D70	10.00'	N17°49'07"W
D79	56.15'	S71°52'49"W
S140	389.42'	N88°42'40"E
S141	32.25'	S20°21'43"W
S142	45.03'	S88°45'30"W
S143	327.80'	S88°42'00"W
S144	30.36'	N10°10'14"W
S208	46.26'	N33°49'30"W
S214	70.29'	S62°00'32"W
S257	10.00'	S17°49'07"E
S258	121.12'	S72°10'53"W
S260	10.00'	S17°49'07"E
S263	20.00'	N72°10'53"E
S264	91.99'	S17°49'07"E
S265	147.82'	N61°01'04"E
S266	15.00'	S28°58'56"E
S267	15.15'	S36°57'43"E
S268	147.26'	S61°01'04"W
S269	212.96'	S08°03'18"W
S270	2.17'	S62°00'32"W
S271	50.02'	N08°03'18"E
S272	64.73'	N17°49'07"W
S275	175.50'	N17°49'07"W
S286	63.60'	N08°03'18"E
S287	102.70'	S08°03'18"W
S292	130.55'	S11°34'50"W
S293	243.62'	S78°25'10"E
S294	53.56'	N71°52'49"E
S295	76.02'	N43°35'18"E
S296	177.52'	N15°10'07"W
S297	10.00'	N74°49'53"E
S298	177.30'	S15°10'07"E
S299	85.95'	S43°35'18"W
S301	274.95'	N78°25'10"W
S302	132.34'	N11°34'50"E
S372	37.74'	S08°03'18"W
S373	76.79'	S62°00'32"W
S374	41.39'	N71°32'18"W
S375	61.37'	S62°00'32"W
S376	133.20'	N62°00'32"E
S377	372.13'	N56°10'30"E
S378	73.00'	N62°58'09"E
S379	45.77'	N20°21'43"E
S380	32.27'	N88°45'30"E
S381	69.35'	S20°21'43"W
S382	82.92'	S62°58'09"W
S383	229.65'	S56°10'30"W
S384	98.88'	N87°24'30"E
S385	22.01'	S17°49'07"E
S386	33.37'	S72°10'53"W
S387	121.93'	N87°24'30"E
S388	68.60'	S56°10'30"W
S389	41.68'	S33°49'30"E
S390	30.16'	S50°13'59"W
S399	21.61'	S62°00'32"W
S400	28.57'	S73°21'27"E
S402	93.07'	N08°03'18"E

CONSERVATION ESMT.

LINE #	LENGTH	BEARING
C53	73.26'	S36°56'02"E
C145	13.41'	N47°19'42"E
C146	23.95'	N55°47'16"E
C147	39.00'	S36°07'35"E
C148	61.60'	S54°43'36"E
C149	46.14'	S12°12'34"E
C150	158.63'	S33°41'54"E
C151	56.11'	S26°18'23"E
C152	31.75'	S10°04'26"E
C153	30.03'	S46°08'03"W
C154	36.62'	N27°31'50"W
C155	62.14'	N22°18'19"W
C156	32.07'	N51°05'01"W
C157	44.67'	N23°27'32"W
C158	60.84'	N42°51'58"W
C159	24.93'	N27°03'04"W
C160	94.98'	N43°20'50"W
C161	108.95'	N28°42'26"W
C162	34.19'	S31°16'52"E
C163	82.24'	S52°08'24"W
C164	53.84'	S44°23'50"W
C165	39.31'	S15°28'18"W
C166	17.41'	N88°32'54"W
C167	57.39'	N52°20'32"W
C168	31.89'	N46°08'03"E
C169	9.87'	N78°24'21"E
C170	158.29'	N52°27'15"E
C171	16.25'	S88°32'54"E
C172	32.09'	S04°34'53"E
C173	56.69'	N79°18'19"E
C174	88.49'	S84°15'36"E
C175	22.28'	S06°08'52"E
C176	33.31'	N70°35'26"W
C177	54.25'	N87°51'12"W
C178	42.15'	S82°15'21"W
C179	78.38'	S33°50'20"W
C180	56.23'	S26°30'26"W
C181	84.98'	S61°49'34"W
C182	122.52'	S64°23'12"W
C183	213.25'	S49°14'42"W
C184	56.40'	S23°11'58"W
C185	27.56'	S49°08'09"E
C186	298.53'	S88°45'30"W
C187	28.49'	N01°14'30"W
C188	42.40'	N40°55'26"E
C189	24.34'	N16°06'22"W
C190	29.49'	N41°14'16"E
C191	30.80'	S67°48'14"E
C192	45.97'	N85°51'16"E
C193	77.17'	N50°06'17"E
C194	37.93'	N38°21'08"E
C195	34.56'	N08°38'03"W
C196	35.63'	N58°27'05"E
C197	44.84'	N71°10'13"E
C198	27.76'	N40°22'23"E
C199	68.38'	N71°10'30"E
C200	77.43'	N60°23'27"E
C201	81.32'	N69°17'30"E
C202	24.86'	N55°40'09"E
C203	52.66'	N80°02'53"E
C204	34.93'	N62°25'10"E
C205	25.49'	N41°37'37"E
C206	41.19'	N18°28'05"E
D58	56.74'	S71°56'53"W

PATHWAY ESMT.

LINE #	LENGTH	BEARING
P207	71.62'	S75°57'59"W
P209	25.00'	S84°51'33"W
P210	69.19'	N75°57'59"E
P211	8.09'	N72°10'53"E
P213	24.09'	S84°51'33"W
P215	66.95'	N57°11'13"E
P216	385.73'	N72°10'53"E
P217	15.00'	N72°10'53"E
P218	15.00'	S72°10'53"W
P219	392.50'	S72°10'53"W
P220	10.00'	N17°49'07"W
P221	67.29'	N57°11'13"E
P222	29.07'	N17°49'07"W
P223	14.14'	N84°06'37"E
P224	29.07'	S17°49'07"E
P225	11.38'	N28°58'56"W
P226	67.38'	N29°11'09"W
P227	11.81'	N49°20'49"W
P228	123.27'	N29°02'19"W
P229	85.72'	N36°57'43"W
P230	8.42'	S61°01'04"W
P231	10.00'	N28°58'56"W
P232	7.02'	N61°01'04"E
P233	56.61'	N36°57'43"W
P234	27.51'	N45°42'21"E
P235	16.54'	N38°35'51"W
P236	23.21'	N89°11'43"W
P237	30.78'	N14°02'47"W
P238	88.70'	N27°52'57"E
P239	82.92'	N29°34'30"E
P240	92.55'	N20°58'48"W
P241	285.05'	N83°59'52"W
P242	73.47'	N78°25'10"W
P243	5.07'	N49°41'56"W
P244	362.36'	S83°59'52"E
P245	56.84'	S21°46'17"E
P246	162.84'	S27°52'57"W
P247	30.78'	S14°02'47"E
P248	23.21'	S89°11'43"E
P249	16.91'	S38°35'51"E
P250	27.51'	S45°42'21"W
P251	152.43'	S36°57'43"E
P252	123.40'	S29°02'19"E
P253	11.81'	S49°20'49"E
P254	67.38'	S29°11'09"E
P255	5.14'	S32°30'02"W
P300	12.08'	N16°17'38"E
P347	23.05'	S26°34'59"W
P348	80.11'	S70°57'58"W
P349	20.30'	S76°02'09"W
P350	284.46'	S56°10'30"W
P351	13.53'	S34°51'10"W
P352	31.10'	S56°10'30"W
P353	21.00'	S77°52'59"W
P354	18.58'	S62°58'09"W
P355	79.76'	S20°21'43"W
P356	10.76'	S88°45'30"W
P357	29.58'	N20°21'43"E
P358	326.48'	S88°42'40"W
P359	127.25'	N43°17'38"E
P360	125.32'	S43°17'38"W
P361	330.45'	N88°42'40"E
P362	43.38'	N20°21'43"E
P363	18.58'	N62°58'09"E
P364	21.00'	N77°52'59"E
P365	31.10'	N56°10'30"E
P366	13.53'	N34°51'10"E
P367	284.46'	N56°10'30"E
P368	20.30'	N76°02'09"E
P369	79.61'	N70°58'27"E
P370	23.05'	N26°34'59"E
P411	23.37'	N65°09'30"E
P412	6.94'	N24°50'30"W
P413	33.39'	N79°24'19"W
P414	8.57'	N24°50'30"W
P415	21.44'	S65°09'30"W

PRIVATE UTILITY ACCES ESMT.

LINE #	LENGTH	BEARING
UA284	103.00'	N87°18'38"E
UA285	104.02'	N87°18'38"E
UA288	101.22'	S73°21'27"E
UA289	100.54'	S73°21'27"E
UA290	5.06'	S08°03'18"W
UA291	102.12'	S87°18'38"W
UA371	102.05'	S73°21'27"E
UA391	24.84'	S27°59'28"E
UA392	27.08'	N51°28'26"W
UA393	10.79'	N62°00'32"E
UA401	5.06'	S08°03'18"W
UA403	5.09'	S08°03'18"W
UA404	5.09'	S08°03'18"W

CURVE TABLE (ALL EASEMENTS)

CURVE #	LENGTH	DELTA	RADIUS	TANGENT	BEARING	CHORD
D1	10.01'	4°35'19"	125.00'	5.01'	N5°07'49"E	10.01'
D2	232.70'	76°11'11"	175.00'	137.18'	S67°04'32"E	215.93'
D3	186.66'	61°06'45"	175.00'	103.31'	S77°15'44"E	177.93'
D49	10.01'	4°35'19"	125.00'	5.01'	N9°43'08"E	10.01'
P13	3.93'	90°00'00"	2.50'	2.50'	N27°10'53"E	3.54'
P14	8.22'	31°24'00"	15.00'	4.22'	S2°07'06"E	8.12'
P15	8.89'	101°55'44"	5.00'	6.17'	S33°08'45"W	7.77'
P16	19.63'	90°00'00"	12.50'	12.50'	S27°10'53"W	17.68'
P17	15.85'	60°32'39"	15.00'	8.76'	S1°05'11"W	15.12'
P18	3.52'	20°09'41"	10.00'	1.78'	S39°15'59"E	3.50'
P19	7.22'	19°55'13"	20.77'	3.65'	N38°59'56"W	7.19'
P20	12.49'	7°32'07"	95.00'	6.26'	S33°11'39"E	12.48'
P21	85.13'	82°40'03"	59.00'	51.89'	N4°22'19"E	77.93'
P22	7.36'	84°18'11"	5.00'	4.53'	S3°33'15"W	6.71'
P23	33.88'	129°24'08"	15.00'	31.73'	N46°32'09"W	27.12'
P24	11.34'	21°39'32"	30.00'	5.74'	S78°21'57"E	11.27'
P25	44.59'	75°08'56"	34.00'	26.16'	N51°37'15"W	41.47'
P26	27.08'	41°55'44"	37.00'	14.18'	N6°55'05"E	26.48'
P27	28.38'	17°07'04"	95.00'	14.30'	N3°57'51"E	28.28'
P28	84.23'	96°31'16"	50.00'	56.04'	S35°44'15"E	74.62'
P29	48.39'	46°12'45"	60.00'	25.60'	S60°53'30"E	47.09'
P30	56.17'	247°33'20"	13.00'	19.44'	S27°24'37"E	21.61'
P31	30.95'	29°33'30"	60.00'	15.83'	S2°15'22"E	30.61'
P32	50.88'	34°17'40"	85.00'	26.23'	N4°37'27"W	50.12'
P33	21.67'	49°39'14"	25.00'	11.57'	S3°03'20"W	20.99'
P34	19.76'	41°55'44"	27.00'	10.35'	N6°55'05"E	19.32'
P35	31.48'	75°08'56"	24.00'	18.47'	N51°37'15"W	29.27'
P36	17.92'	25°39'53"	40.00'	9.11'	S76°21'46"E	17.77'
P37	10.17'	38°49'52"	15.00'	5.29'	N77°41'47"E	9.97'
P38	19.30'	73°44'18"	15.00'	11.25'	S7°04'36"E	18.00'
P39	22.07'	84°18'11"	15.00'	13.58'	S3°33'15"W	20.13'
P40	70.70'	82°40'03"	49.00'	43.10'	N4°22'19"E	64.72'
P41	13.81'	8°18'40"	95.21'	6.92'	S33°11'39"E	13.80'
P42	3.61'	20°41'46"	10.00'	1.83'	N38°59'56"W	3.59'
P43	7.04'	20°09'41"	20.00'	3.56'	S39°15'59"E	7.00'
P44	26.92'	61°41'10"	25.00'	14.93'	S1°39'26"W	25.63'
P50	10.00'	1°31'41"	375.00'	5.00'	N4°22'37"W	10.00'
P51	6.40'	11°17'11"	32.50'	3.21'	N32°13'34"E	6.39'
P52	47.62'	11°15'01"	242.52'	23.89'	N43°29'40"E	47.54'
P53	35.15'	8°18'18"	242.52'	17.61'	N53°16'20"E	35.12'
P54	41.76'	9°52'01"	242.52'	20.93'	N62°21'29"E	41.71'
P55	38.17'	7°21'12"	297.40'	19.11'	S67°17'22"W	38.14'
P56	78.54'	22°26'32"	200.53'	39.78'	S74°50'01"W	78.04'
P57	18.42'	9°59'20"	105.63'	9.23'	S81°03'37"W	18.39'
P58	32.06'	19°51'39"	92.50'	16.19'	S66°06'19"W	31.90'
P59	6.51'	21°19'19"	17.50'	3.29'	S45°30'50"W	6.47'
P60	10.23'	21°19'19"	27.50'	5.18'	N45°30'50"E	10.17'
P61	10.42'	21°42'29"	27.50'	5.27'	N67°01'44"E	10.36'
P62	4.56'	14°54'50"	17.50'	2.29'	S70°25'34"W	4.54'
P63	1.86'	42°36'26"	2.50'	0.97'	S41°39'56"W	1.82'
P64	111.57'	134°34'58"	47.50'	113.50'	S23°59'51"E	87.64'
P65	52.68'	17°14'47"	175.00'	26.54'	S56°04'17"E	52.48'
P66	88.08'	134°34'58"	37.50'	89.61'	S23°59'51"E	69.19'
P67	9.30'	42°36'26"	12.50'	4.87'	S41°39'56"W	9.08'
P68	7.16'	14°54'50"	27.50'	3.60'	S70°25'34"W	7.14'
P69	6.63'	21°42'29"	17.50'	3.36'	N67°01'44"E	6.59'
P70	6.51'	21°19'19"	17.50'	3.29'	N45°30'50"E	6.47'
P71	10.23'	21°19'19"	27.50'	5.18'	S45°30'50"W	10.17'
P72	35.53'	19°51'39"	102.50'	17.95'	S66°06'19"W	35.35'
P73	20.17'	10°02'56"	115.00'	10.11'	S81°03'37"W	20.14'
P74	74.62'	22°30'08"	190.00'	37.80'	N74°50'01"E	74.14'
P75	39.46'	7°24'49"	305.00'	19.76'	S67°17'22"W	39.44'
P76	39.90'	9°49'54"	232.52'	20.00'	N62°20'26"E	39.85'
P77	33.70'	8°18'18"	232.52'	16.88'	N53°16'20"E	33.67'
P78	45.66'	11°15'01"	232.52'	22.90'	N43°29'40"E	45.58'
P79	4.43'	11°17'11"	22.50'	2.22'	N32°13'34"E	4.42'
S47	30.21'	9°53'26"	175.00'	15.14'	S84°31'59"E	30.17'
UA45	5.00'	1°38'14"	175.00'	2.50'	N3°30'29"W	5.00'
UA46	5.00'	1°38'14"	175.00'	2.50'	N15°49'26"E	5.00'
UA48	5.00'	1°38'14"	175.00'	2.50'	N1°52'15"W	5.00'
UA80	5.00'	1°38'14"	175.00'	2.50'	N17°27'40"E	5.00'

NO.	DATE	REVISION
2	4-25-22	REVISED PER NLT, LEB. CO. ENGINEER & CITY OF LEB. AUTHORITY
1	2-1-22	REVISED PER NLT, LEB. CO. ENGINEER, LCPD, NLTMA, & CITY OF LEB. AUTHORITY

FOR PIONEER MANAGEMENT BY:

MANAGER: JAMES C. HENKE
SURV. CHIEF: RC
FIELDBOOK NO. VALUE
DESIGN BY: JDB/KWG
CHKD BY: JDB/JCH
DRAWN BY: RC
CHKD BY: RC

DRAWING REFERENCE:
F:\12\12-0950-02\CAD\Final-Ph4\Easement.dwg

XREFS:
TB [F:\12\12-0950-02\CAD\Final-Ph4\X-refs\TB.dwg]
Key Map [F:\12\12-0950-02\CAD\Final-Ph4\X-refs\KeyMap.dwg]
X-Base [F:\12\12-0950-02\CAD\Final-Ph4\X-refs\X-Base.dwg]
Esmt-Dim-Base [F:\12\12-0950-02\CAD\Final-Ph4\C3D Bases\Esmt-Dim-Base.dwg]
P-Base [F:\12\12-0950-02\CAD\Final-Ph4\X-refs\P-Base.dwg]
Ph1-AB-block [F:\12\12-0950-02\CAD\Final-Ph4\X-refs\Ph1-AB-block.dwg]
Ph1-CB-block [F:\12\12-0950-02\CAD\Final-Ph4\X-refs\Ph1-CB-block.dwg]
Street-Alignments-Base [F:\12\12-0950-02\CAD\Final-Ph4\C3D Bases\Street-Alignments-Base.dwg]
Ph2-AB-block [F:\12\12-0950-02\CAD\Final-Ph4\X-refs\Ph2-AB-block.dwg]
Esmt-Dim-Base-PH3 [F:\12\12-0950-02\CAD\Final-Ph4\C3D Bases\Esmt-Dim-Base-PH3.dwg]

CLIENT
LANDMARK HOMES AT SWEETBRIAR
c/o MR. CLIFF WEAVER
1737 WEST MAIN STREET
EPHRATA, PA 17522
(717) 733-1536

SCALE
1" = 30'
0 15' 30' 60' 90'

PIONEER
Management, LLC
111 Millersville Road, Lancaster, PA 17603
Phone (717) 481-5500 · Fax (717) 481-4955
Email: jh@pioneermanagementllc.com
Website: www.pioneermanagementllc.com

EASEMENT PLAN - LINE & CURVE CHARTS
FINAL PHASE 4 & REVISED FINAL PHASE 3 SUBDIVISION PLAN
FOR
THE CROSSINGS AT SWEET BRIAR
NORTH LEBANON TOWNSHIP LEBANON COUNTY, PA

DATE: JUNE 25, 2021
SHEET NO. 15 OF 43
DWG. NO. 12-0950-02-F

DRAINAGE ESMT.						
CURVE #	LENGTH	DELTA	RADIUS	TANGENT	BEARING	CHORD
D:C4	10.25'	3°21'24"	175.00'	5.13'	S22°09'44"E	10.25'
D:C5	132.71'	43°26'58"	175.00'	69.73'	S45°33'55"E	129.55'
D:C585	125.83'	41°11'54"	175.00'	65.78'	N13°10'47"W	123.14'
D:C586	18.85'	90°00'00"	12.00'	12.00'	S16°01'04"W	16.97'

DRAINAGE ESMT.		
LINE #	LENGTH	BEARING
C:131	59.31'	N79°47'54"W
C:132	31.32'	N76°05'51"W
C:133	73.68'	N10°08'14"W
C:134	9.31'	N42°16'48"E
C:135	31.38'	N25°10'22"W
C:136	49.50'	N39°36'15"W
C:138	68.03'	S68°19'49"W
C:139	31.86'	N31°23'57"W
C:140	63.60'	N45°26'19"E
C:807	16.51'	S21°40'06"E
D:65	34.00'	S69°02'25"E
D:66	133.17'	S20°57'35"W
D:67	35.49'	S11°19'08"E
D:68	38.65'	S20°57'35"W
D:69	166.14'	S28°58'56"E
D:70	40.00'	S01°01'04"W
D:71	162.30'	S28°58'56"E
D:127	72.76'	N69°30'58"E
D:128	51.36'	S23°50'26"E
D:141	30.14'	N21°40'06"W
D:142	21.77'	N61°16'45"E
D:143	55.26'	N04°31'38"W
D:144	145.33'	N05°12'44"E
D:145	20.00'	S84°47'16"E
D:146	143.62'	S05°12'44"W
D:147	42.75'	S04°31'38"E
D:321	213.15'	N28°58'56"W
D:322	183.43'	N20°57'35"E
D:323	0.75'	N01°01'04"E
D:324	62.03'	N22°35'47"W
D:325	65.41'	N35°22'05"W
D:326	65.00'	N28°58'56"W
D:697	21.63'	S04°31'38"E
D:698	55.04'	N73°09'48"W
D:699	8.93'	S69°30'58"W
D:941	50.00'	S56°13'16"W
D:942	150.72'	N77°05'20"E
D:943	18.20'	S12°54'40"E
D:944	83.33'	S70°17'44"W
D:945	79.99'	S02°04'29"W
D:946	69.23'	N29°04'26"W
D:947	36.90'	N74°32'16"W
D:948	18.98'	N19°46'42"W
D:949	3.27'	S74°49'53"W
D:950	94.71'	S51°23'08"W
D:951	30.00'	S61°01'04"W
D:952	118.43'	N28°58'56"W
D:953	84.78'	N61°01'04"E
D:958	134.59'	N22°42'37"E
D:960	30.96'	N16°00'22"E
D:968	2.11'	S53°49'40"W
D:969	19.06'	N61°16'45"W

DRAINAGE ESMT.		
LINE #	LENGTH	BEARING
D405	39.05'	S05°12'44"W
D406	20.00'	N84°47'16"W
D407	201.24'	N39°36'11"E
D408	20.00'	S50°23'49"E
D409	195.05'	S39°36'11"W
D410	45.24'	N05°12'44"E

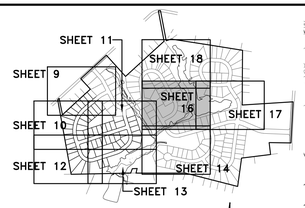

KEY MAP
SCALE: 1"=1000'

LEGEND

- EXISTING WETLANDS BOUNDARY
- EXISTING ADJOINER LINE
- EXISTING BOUNDARY LINE
- EXISTING CENTERLINE
- PROPOSED CENTERLINE
- EXISTING EDGE OF CARTWAY
- PROPOSED EDGE OF PAVEMENT/CURB
- EXISTING RIGHT-OF-WAY LINE
- PROPOSED RIGHT-OF-WAY LINE
- PROPOSED LOT LINE
- EXISTING EASEMENT LINE
- PROPOSED EASEMENT LINE
- PROPOSED CLEAR SIGHT TRIANGLE (C.S.T.)
- EXISTING FENCE
- EXISTING GUIDE RAIL
- EXISTING RIPARIAN BARRIER
- PROPOSED FENCE
- PROPOSED GUIDE RAIL
- PROPOSED RIPARIAN BARRIER
- EXISTING SIGN
- PROPOSED SIGNS
- EXISTING LOT MARKER
- BENCHMARK
- EXISTING VEGETATION (SHRUB, TREE)
- EXISTING TREELINE/BRUSHLINE
- PROPOSED TREELINE
- EXISTING UTILITY POLE W/ GUY WIRE
- EXISTING OVERHEAD ELECTRIC (OE)
- EXISTING UNDERGROUND ELECTRIC (UE)
- EXISTING ELECTRIC BOX (E)
- EXISTING LIGHT
- PROPOSED STREET LIGHT
- EXISTING WATERLINE (W)
- EXISTING WATER VALVE (W.V.)
- EXISTING FIRE HYDRANT
- EXISTING SANITARY SEWER MANHOLE (S)
- EXISTING GRAVITY SANITARY SEWER (S)
- EXISTING STORM PIPE (CMP)
- EXISTING STORM MANHOLE
- EXISTING STORM INLET
- EXISTING STORM HEADWALL/ENDWALL
- EXISTING GAS LINE (GV)
- EXISTING GAS VALVE
- PROPOSED PAVED PATH
- PROPOSED CONCRETE SIDEWALK
- PROPOSED LOT NUMBER (100)
- ZONING BOUNDARY
- PROPOSED DRAINAGE EASEMENT
- PROPOSED PATHWAY EASEMENT
- PROPOSED SANITARY SEWER EASEMENT
- PROPOSED PRIVATE UTILITY EASEMENT (FOR LOTS 64, 65 & 66 ACCESS)
- BRIAR RIDGE DEVELOPMENT SANITARY SEWER EASEMENT (NOT PROPOSED AS A PART OF SWEET BRIAR PLANS)
- AREA OF EXISTING CONSERVATION EASEMENT
- EXISTING EASEMENT TO BE VACATED
- EASEMENT TIE-DOWN

SEE SHEET 18
MATCHLINE

SEE SHEET 11
MATCHLINE

MATCHLINE
SEE SHEET 14

MATCHLINE
SEE SHEET 17

SEE SHEETS 17-18 FOR REVISED PHASE 3 OPEN SPACE PEDESTRIAN ACCESS & CONSERVATION EASEMENT LINE & CURVE CHARTS.

NO.	DATE	REVISION
2	4-25-22	REVISED PER NLT, LEB. CO. ENGINEER & CITY OF LEB. AUTHORITY
1	2-1-22	REVISED PER NLT, LEB. CO. ENGINEER, LCPD, NLTMA, & CITY OF LEB. AUTHORITY

FOR PIONEER MANAGEMENT BY:

FIELDBOOK NO.
VALUE

SURV. CHIEF:
RC

DRAWN BY:
RC

CHKD BY:
RC

MANAGER:
JAMES C. HENKE

DESIGN BY:
JDB/KWG

CHKD BY:
JDB/JCH

DRAWING REFERENCE:
F:\12\12-0950-02\CAD\Final-Ph4\Easement.dwg

XREFS:
TB: [F:\12\12-0950-02\CAD\Final-Ph4\X-ref\TB.dwg]
Ph-4 Base: [F:\12\12-0950-02\CAD\Final-Ph4\X-ref\Ph4Base.dwg]
F-Base: [F:\12\12-0950-02\CAD\Final-Ph4\X-ref\F-Base.dwg]
Ph-3 Base: [F:\12\12-0950-02\CAD\Final-Ph4\X-ref\Ph3Base.dwg]
Ph-2 Base: [F:\12\12-0950-02\CAD\Final-Ph4\X-ref\Ph2Base.dwg]
Ph-1 Base: [F:\12\12-0950-02\CAD\Final-Ph4\X-ref\Ph1Base.dwg]
Easement-Base: [F:\12\12-0950-02\CAD\Final-Ph4\X-ref\Easement-Base.dwg]
Ease-Con-Base-Ph3: [F:\12\12-0950-02\CAD\Final-Ph4\LCD Base\Ease-Con-Base-Ph3.dwg]

CLIENT
LANDMARK HOMES AT SWEETBRIAR
c/o MR. CLIFF WEAVER
1737 WEST MAIN STREET
EPHRATA, PA 17522
(717) 733-1536

SCALE
1" = 30'
0 15' 30' 60' 90'

PIONEER Management, LLC
111 Millersville Road, Lancaster, PA 17603
PH: (717) 461-4555 FAX: (717) 461-4855
Email: jrb@pioneermanagementllc.com
Website: www.pioneermanagementllc.com

REVISED PHASE 3 OPEN SPACE EASEMENT PLAN
FINAL PHASE 4 & REVISED FINAL PHASE 3 SUBDIVISION PLAN
FOR
THE CROSSINGS AT SWEET BRIAR
NORTH LEBANON TOWNSHIP LEBANON COUNTY, PA.

DATE: JUNE 25, 2021

SHEET NO. 16 OF 43

DWG. NO. 12-0950-02-F

F:\12\12-0950-02\CAD\Final-Ph4\Easement.dwg, 16 REVISED PHASE 3 OPEN SPACE EASEMENT PLAN, 6/7/2022 2:24:18 PM, 1:1

F:\12\12-0950-02\CAD\Final-Ph4\Easement.dwg, 17 REVISED PHASE 3 OPEN SPACE EASEMENT PLAN, 6/7/2022 2:24:28 PM, 1:1

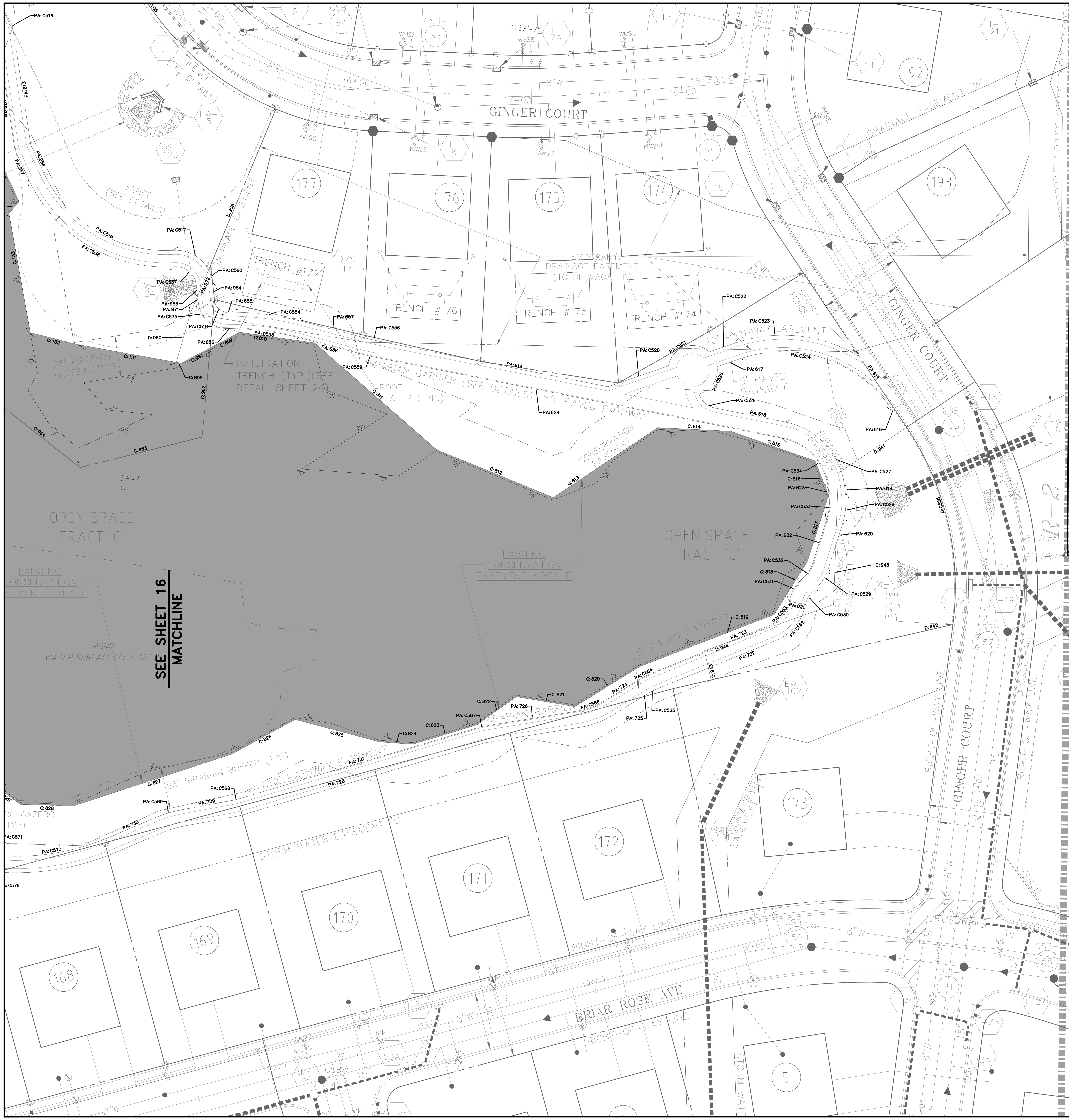

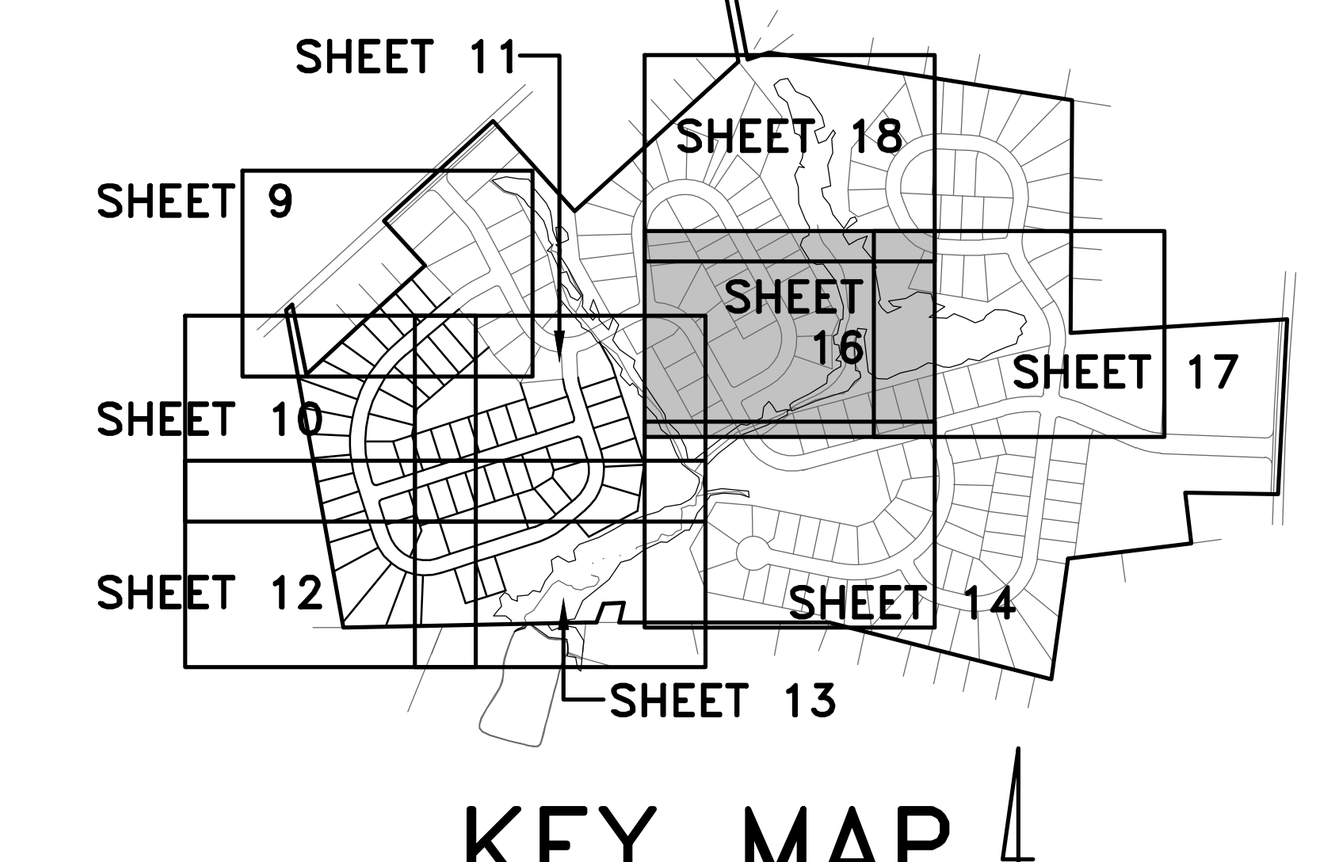

KEY MAP
SCALE: 1"=1000'

SEE SHEETS 16 & 18 FOR REVISED PHASE 3 OPEN SPACE DRAINAGE & CONSERVATION EASEMENT LINE & CURVE CHARTS.

LEGEND

- EXISTING WETLANDS BOUNDARY
- EXISTING ADJOINER LINE
- EXISTING BOUNDARY LINE
- EXISTING CENTERLINE
- PROPOSED CENTERLINE
- EXISTING EDGE OF CARTWAY
- PROPOSED EDGE OF PAVEMENT/CURB
- EXISTING RIGHT-OF-WAY LINE
- PROPOSED RIGHT-OF-WAY LINE
- PROPOSED LOT LINE
- EXISTING EASEMENT LINE
- PROPOSED EASEMENT LINE
- PROPOSED CLEAR SIGHT TRIANGLE (C.S.T.)
- EXISTING FENCE
- EXISTING GUIDE RAIL
- EXISTING RIPARIAN BARRIER
- PROPOSED FENCE
- PROPOSED GUIDE RAIL
- PROPOSED RIPARIAN BARRIER
- EXISTING SIGN
- PROPOSED SIGNS
- EXISTING LOT MARKER
- BENCHMARK
- EXISTING VEGETATION (SHRUB TREE)
- EXISTING TREELINE/BRUSHLINE
- PROPOSED TREELINE
- EXISTING UTILITY POLE W/ GUY WIRE
- EXISTING OVERHEAD ELECTRIC (OE)
- EXISTING UNDERGROUND ELECTRIC (UE)
- EXISTING ELECTRIC BOX (E)
- EXISTING LIGHT
- PROPOSED STREET LIGHT
- EXISTING WATERLINE (W)
- EXISTING WATER VALVE (WV)
- EXISTING FIRE HYDRANT
- EXISTING SANITARY SEWER MANHOLE (S)
- EXISTING GRAVITY SANITARY SEWER (S)
- EXISTING STORM PIPE (CMP)
- EXISTING STORM MANHOLE
- EXISTING STORM INLET
- EXISTING STORM HEADWALL/ENDWALL
- EXISTING GAS LINE (G)
- EXISTING GAS VALVE (GV)
- PROPOSED PAVED PATH
- PROPOSED CONCRETE SIDEWALK
- PROPOSED LOT NUMBER (100)
- ZONING BOUNDARY
- PROPOSED DRAINAGE EASEMENT
- PROPOSED PATHWAY EASEMENT
- PROPOSED SANITARY SEWER EASEMENT
- PROPOSED PRIVATE UTILITY EASEMENT (FOR LOTS 64, 65 & 66 ACCESS)
- BRIAR RIDGE DEVELOPMENT SANITARY SEWER EASEMENT (NOT PROPOSED AS A PART OF SWEET BRIAR PLANS)
- AREA OF EXISTING CONSERVATION EASEMENT
- EXISTING EASEMENT TO BE VACATED
- EASEMENT TIE-DOWN

PEDESTRIAN ACCESS ESMT.

LINE #	LENGTH	BEARING
C:131	59.31'	N79°47'54"W
C:132	31.32'	N76°05'51"W
C:133	73.68'	N10°08'14"W
C:134	9.31'	N42°16'48"E
C:135	31.38'	N25°10'22"W
C:136	49.50'	N39°36'15"W
C:137	42.16'	N21°07'41"E
C:138	68.03'	S68°19'49"W
C:139	31.86'	N31°23'57"W
C:140	63.60'	N45°26'19"E
C:739	14.37'	N65°09'58"E
C:740	37.12'	N12°25'06"E
C:741	25.99'	N39°10'39"E
C:742	46.87'	S43°11'05"E
C:743	26.03'	N73°24'01"E
C:744	20.29'	S19°43'09"E
C:745	99.25'	N63°38'52"E
C:746	30.12'	S24°15'00"E
C:747	24.22'	N19°43'09"W
C:748	14.49'	N53°59'10"E
C:749	60.94'	N62°27'04"E
C:750	65.34'	N58°13'16"E
C:751	23.06'	N07°33'32"E
C:752	34.08'	N50°28'33"E
C:753	20.97'	N62°02'46"E
C:754	14.81'	N01°08'02"W
C:755	18.51'	S74°21'38"E
C:756	25.08'	N41°05'13"E
C:757	29.99'	N12°07'10"W
C:758	15.40'	S74°11'18"E
C:759	28.24'	S04°31'13"E
C:760	13.83'	S63°04'39"W
C:761	94.06'	S12°22'45"W
C:762	84.87'	S16°39'10"E
C:763	68.99'	S37°48'24"E
C:764	20.11'	N85°52'29"E
C:765	22.67'	S61°55'21"E
C:766	63.60'	S32°01'53"E
C:767	68.01'	S21°02'20"W
C:768	79.24'	S22°34'04"E
C:769	95.07'	S08°16'29"E
C:770	100.18'	S17°11'52"W
C:771	51.67'	S34°43'03"E
C:772	103.43'	S14°00'17"E
C:773	34.94'	S52°53'34"E
C:774	8.85'	S67°11'00"E
C:775	11.77'	S51°36'04"E
C:776	11.61'	S30°45'26"E
C:777	14.92'	S15°40'30"E
C:778	16.36'	S02°03'09"E
C:779	15.76'	S13°43'25"W
C:780	9.85'	S45°36'44"W
C:781	20.77'	S76°06'30"W
C:782	26.93'	S82°12'19"W
C:783	31.64'	N60°00'07"W
C:784	40.45'	N39°51'49"W
C:785	17.75'	N47°31'04"W
C:786	39.89'	N39°14'50"W
C:787	31.93'	N45°12'33"W
C:788	20.76'	N67°59'34"W
C:789	22.94'	N87°04'03"W
C:790	21.54'	S79°22'04"W
C:791	53.25'	S71°01'39"W
C:792	18.08'	S66°41'44"W
C:793	8.17'	N32°26'56"W
C:794	28.63'	N37°17'33"E
C:795	18.24'	N47°00'40"E
C:796	22.58'	N41°43'55"E
C:797	86.86'	N28°54'50"E
C:798	21.60'	N17°13'30"E
C:799	22.07'	N10°04'24"E
C:800	42.65'	N23°08'56"E
C:801	69.14'	N08°31'30"W
C:802	30.83'	N75°00'24"E
C:803	58.25'	S25°18'52"E
C:804	51.50'	S29°51'19"E
C:805	36.13'	N51°59'03"E
C:806	18.14'	N73°12'13"E
C:807	16.51'	S21°40'06"E
C:808	2.87'	N79°47'54"W

PEDESTRIAN ACCESS ESMT.

LINE #	LENGTH	BEARING
C:809	20.26'	S62°13'23"W
C:810	45.99'	N81°56'52"W
C:811	98.57'	N48°50'00"W
C:812	76.63'	N67°41'15"W
C:813	76.24'	S56°09'22"W
C:814	44.42'	N87°14'34"W
C:815	54.42'	N70°36'30"W
C:816	22.46'	N21°37'19"W
C:817	42.37'	S17°47'18"W
C:818	38.00'	S32°06'13"W
C:819	87.50'	S68°51'07"W
C:820	46.39'	S58°18'25"W
C:821	36.08'	N80°24'04"W
C:822	29.53'	S54°30'29"W
C:823	40.50'	S73°07'12"W
C:824	20.41'	N85°56'52"W
C:825	53.03'	N75°05'09"W
C:826	43.98'	S61°21'52"W
C:827	101.25'	S71°51'31"W
C:828	32.28'	N88°13'50"W
C:829	36.39'	N53°53'14"W
C:830	29.82'	S53°58'31"W
C:831	59.17'	S43°23'09"W
C:832	110.86'	S72°29'44"W
C:833	87.24'	S67°00'35"W
C:961	20.01'	S62°13'23"W
C:962	54.49'	N05°12'00"E
C:963	76.36'	N75°57'49"E
C:964	65.61'	S51°48'26"E
C:965	301.76'	S25°24'16"E
C:966	18.67'	S53°49'40"W
C:967	25.76'	N29°51'19"W
PA:231	10.00'	N61°01'04"E
PA:232	54.92'	S29°04'26"E
PA:233	4.52'	N54°11'11"E
PA:234	97.38'	N60°47'34"E
PA:235	100.55'	N38°48'53"E
PA:236	43.74'	N05°42'09"E
PA:237	1.94'	N39°49'42"W
PA:238	23.93'	N04°31'13"W
PA:239	10.55'	N33°04'39"E
PA:240	8.81'	N06°52'45"E
PA:241	74.89'	N05°24'59"W
PA:242	26.31'	N21°39'10"W
PA:243	13.87'	N11°24'26"E
PA:244	32.62'	N18°58'56"W
PA:245	32.51'	N10°57'35"E
PA:246	8.38'	N20°34'08"W
PA:247	25.51'	S25°14'43"W
PA:248	107.59'	S52°59'47"W
PA:249	107.59'	N52°59'47"E
PA:250	26.92'	N25°14'43"E
PA:251	2.42'	N00°12'38"W
PA:252	45.31'	N20°15'36"E
PA:254	78.13'	N34°13'05"W
PA:255	17.43'	N02°02'51"W
PA:256	2.31'	N66°18'33"E
PA:258	27.65'	S66°18'33"W
PA:260	78.13'	S34°13'05"E
PA:262	45.31'	S20°15'36"W
PA:263	2.42'	S00°12'38"E
PA:264	9.03'	S20°34'08"E
PA:265	32.51'	S10°57'35"W
PA:266	32.62'	S18°58'56"E
PA:267	13.87'	S11°24'26"W
PA:268	26.31'	S21°39'10"E
PA:269	74.89'	S05°24'59"E
PA:270	8.81'	S06°52'45"W
PA:271	10.55'	S33°04'39"W
PA:272	23.93'	S04°31'13"E
PA:273	1.94'	S39°49'42"E
PA:274	46.71'	S05°42'09"W
PA:275	105.47'	S38°48'53"W
PA:276	98.21'	S60°47'34"W
PA:278	54.94'	N29°04'26"W
PA:467	4.39'	S46°24'59"E
PA:468	133.01'	N52°59'47"E
PA:469	133.01'	S52°59'47"W
PA:470	6.53'	S28°58'56"E
PA:471	4.39'	N46°24'59"W

PEDESTRIAN ACCESS ESMT.

LINE #	LENGTH	BEARING
PA:472	4.46'	S20°57'35"W
PA:473	6.53'	N28°58'56"W
PA:474	4.46'	N20°57'35"E
PA:475	55.61'	N28°58'56"W
PA:476	55.61'	S28°58'56"E
PA:478	74.32'	N32°48'24"W
PA:479	74.32'	S32°48'24"E
PA:600	25.09'	N55°55'41"W
PA:601	61.71'	N43°09'44"W
PA:602	30.73'	N36°27'29"W
PA:603	19.85'	N86°50'44"W
PA:604	43.04'	S73°17'47"W
PA:605	36.33'	S66°32'13"W
PA:606	10.86'	N17°10'05"W
PA:607	63.81'	N51°29'35"E
PA:608	25.00'	N25°55'47"E
PA:609	22.42'	N39°01'34"E
PA:610	9.54'	N78°31'30"W
PA:611	3.22'	N71°41'45"W
PA:612	41.92'	N31°18'40"W
PA:613	71.74'	N08°44'44"W
PA:614	142.84'	N78°44'54"W
PA:615	38.18'	S33°46'44"E
PA:616	1.50'	N56°13'16"E
PA:617	14.89'	N71°08'56"E
PA:618	43.89'	N78°44'54"W
PA:619	4.36'	N06°15'42"W
PA:620	28.11'	N17°37'28"E
PA:621	10.00'	S78°41'46"E
PA:622	28.11'	S17°37'28"W
PA:623	4.36'	S06°15'42"E
PA:624	252.91'	S78°44'54"E
PA:625	73.16'	S08°44'44"E
PA:626	41.92'	S31°18'40"E
PA:627	9.54'	S78°31'30"E
PA:628	3.22'	S71°41'45"E
PA:629	22.42'	S39°01'34"W
PA:630	25.00'	S25°55'47"W
PA:631	63.81'	S51°29'35"W
PA:633	36.33'	N66°32'13"E
PA:634	43.04'	N73°17'47"E
PA:636	30.73'	S36°27'29"E
PA:638	25.09'	S55°55'41"E
PA:655	3.26'	S89°13'23"E
PA:656	3.26'	N89°13'23"W
PA:657	40.85'	S75°19'26"E
PA:658	40.85'	N75°19'26"W
PA:669	10.00'	S23°41'27"E
PA:722	77.22'	N67°53'02"E
PA:723	77.22'	N67°53'02"E
PA:724	24.13'	N58°18'25"E
PA:725	3.48'	N58°18'25"E
PA:726	55.58'	N80°46'28"E
PA:727	149.59'	N73°24'27"E
PA:728	406.40'	N74°49'53"E
PA:729	30.88'	N79°33'22"E
PA:730	29.87'	N66°55'40"E
PA:731	120.07'	N74°32'05"E
PA:732	120.07'	N74°32'05"E
PA:733	10.58'	N65°59'33"E
PA:734	75.02'	N74°49'53"E
PA:735	67.30'	N65°59'33"E
PA:736	16.59'	S19°46'42"E
PA:737	16.59'	N19°46'42"E
PA:738	0.64'	N51°23'08"E
PA:865	17.43'	S02°02'51"E
PA:915	9.97'	N17°13'29"W
PA:918	19.85'	S86°50'44"E
PA:920	61.71'	S43°09'44"E
PA:954	11.10'	S06°37'48"E
PA:955	6.97'	S06°37'48"E
PA:956	18.71'	N24°53'04"W
PA:957	20.13'	N24°53'04"W
PA:970	10.52'	S53°49'40"E
PA:971	4.14'	S06°37'48"E
PA:972	17.31'	N22°42'37"E

NO.	DATE	REVISION
2	4-25-22	REVISED PER NLT, LEB. CO. ENGINEER & CITY OF LEB. AUTHORITY
1	2-1-22	REVISED PER NLT, LEB. CO. ENGINEER, LCPD, NLTMA, & CITY OF LEB. AUTHORITY

FOR PIONEER MANAGEMENT BY:

FIELDBOOK NO.: VALUE
SURV. CHIEF: RC
CHKD BY: RC
DRAWN BY: RC
MANAGER: JAMES C. HENKE
DESIGN BY: JDB/KWG
CHKD BY: JDB/JCH
DRAWING REFERENCE: F:\12\12-0950-02\CAD\Final-Ph4\Easement.dwg

XREFS:
TB [F:\12\12-0950-02\CAD\Final-Ph4\X-refs\TB.dwg]
Key Map [F:\12\12-0950-02\CAD\Final-Ph4\X-refs\KeyMap.dwg]
X-Base [F:\12\12-0950-02\CAD\Final-Ph4\X-refs\X-Base.dwg]
Esmt-Dim-Base [F:\12\12-0950-02\CAD\Final-Ph4\C3D Bases\Esmt-Dim-Base.dwg]
P-Base [F:\12\12-0950-02\CAD\Final-Ph4\X-refs\P-Base.dwg]
Ph1-AB-block [F:\12\12-0950-02\CAD\Final-Ph4\X-refs\Ph1-AB-block.dwg]
Ph1-CB-block [F:\12\12-0950-02\CAD\Final-Ph4\X-refs\Ph1-CB-block.dwg]
Street-Alignments-Base [F:\12\12-0950-02\CAD\Final-Ph4\C3D Bases\Street-Alignments-Base.dwg]
Ph2-AB-block [F:\12\12-0950-02\CAD\Final-Ph4\X-refs\Ph2-AB-block.dwg]
Esmt-Dim-Base-PH3 [F:\12\12-0950-02\CAD\Final-Ph4\C3D Bases\Esmt-Dim-Base-PH3.dwg]

CLIENT
LANDMARK HOMES AT SWEETBRIAR
c/o MR. CLIFF WEAVER
1737 WEST MAIN STREET
EPHRATA, PA 17522
(717) 733-1536

SCALE
1" = 30'
0 15' 30' 60' 90'

PIONEER
Management, LLC
111 Millersville Road, Lancaster, PA 17603
Phone (717) 481-5500 · Fax (717) 481-4955
Email: jh@pioneermanagementllc.com
Website: www.pioneermanagementllc.com

REVISED PHASE 3 OPEN SPACE EASEMENT PLAN
FINAL PHASE 4 & REVISED FINAL PHASE 3 SUBDIVISION PLAN
FOR
THE CROSSINGS AT SWEET BRIAR
NORTH LEBANON TOWNSHIP LEBANON COUNTY, PA

DATE: JUNE 25, 2021
SHEET NO. 17 OF 43
DWG. NO. 12-0950-02-F

F:\12\12-0950-02\CAD\Final-Ph4\Easement.dwg, 18 REVISED PHASE 3 OPEN SPACE EASEMENT PLAN, 6/7/2022 2:24:36 PM, 1:1

PEDESTRIAN ACCESS ESMT.

CURVE #	LENGTH	DELTA	RADIUS	TANGENT	BEARING	CHORD
PA: C95	32.08'	96°44'22"	19.00'	21.38'	S77°26'37"E	28.40'
PA: C96	7.95'	45°31'51"	10.00'	4.20'	N17°03'46"W	7.74'
PA: C97	12.32'	35°18'29"	20.00'	6.37'	S22°10'27"E	12.13'
PA: C98	13.12'	37°35'51"	20.00'	6.81'	S14°16'43"W	12.89'
PA: C99	4.57'	26°11'54"	10.00'	2.33'	N19°58'42"E	4.53'
PA: C100	2.15'	12°17'44"	10.00'	1.08'	N0°43'53"E	2.14'
PA: C101	12.75'	16°14'11"	45.00'	6.42'	N13°32'04"W	12.71'
PA: C102	8.76'	11°09'14"	45.00'	4.39'	N27°13'47"W	8.75'
PA: C107	71.69'	26°04'40"	157.52'	36.48'	S36°21'33"E	71.08'
PA: C108	36.37'	34°43'40"	60.00'	18.76'	S5°57'24"E	35.81'
PA: C109	8.27'	5°34'31"	85.00'	4.14'	N8°37'11"E	8.27'
PA: C110	53.23'	10°00'00"	305.00'	26.68'	S23°58'56"E	53.17'
PA: C111	28.74'	29°56'31"	55.00'	14.71'	S4°00'41"E	28.42'
PA: C112	5.50'	31°31'42"	10.00'	2.82'	N4°48'16"W	5.43'
PA: C113	4.82'	18°24'08"	15.00'	2.43'	S85°36'26"E	4.80'
PA: C114	33.34'	100°32'12"	19.00'	22.86'	N75°30'49"E	29.22'
PA: C115	42.41'	87°38'54"	27.73'	26.61'	S81°57'28"W	38.40'
PA: C116	4.93'	14°51'46"	19.00'	2.48'	N45°33'54"E	4.91'
PA: C117	10.00'	3°16'28"	175.00'	5.00'	N37°00'13"W	10.00'
PA: C118	2.33'	14°51'46"	9.00'	1.17'	N45°33'54"E	2.33'
PA: C119	57.71'	87°38'54"	37.73'	36.21'	S81°57'28"W	52.25'
PA: C120	15.79'	100°32'12"	9.00'	10.83'	N75°30'49"E	13.84'
PA: C121	28.11'	107°22'52"	15.00'	20.41'	S16°37'39"W	24.17'
PA: C122	19.65'	20°28'15"	55.00'	9.93'	S10°01'29"W	19.55'
PA: C123	101.74'	54°28'42"	107.00'	55.08'	N6°58'44"W	97.95'
PA: C124	26.67'	32°10'14"	47.50'	13.70'	S18°07'58"E	26.32'
PA: C125	43.58'	66°35'03"	37.50'	24.63'	S31°14'41"W	41.17'
PA: C126	61.76'	235°55'09"	15.00'	28.26'	S66°16'13"W	26.50'
PA: C127	32.81'	68°21'23"	27.50'	18.67'	S32°07'51"W	30.90'
PA: C128	21.06'	32°10'14"	37.50'	10.81'	S18°07'58"E	20.78'
PA: C129	111.25'	54°28'42"	117.00'	60.23'	N6°58'44"W	107.10'
PA: C130	16.08'	20°28'15"	45.00'	8.13'	S10°01'29"W	15.99'
PA: C131	30.60'	116°54'06"	15.00'	24.43'	N12°17'19"W	25.57'
PA: C132	11.01'	31°31'42"	20.00'	5.65'	N4°48'16"W	10.87'
PA: C133	23.52'	29°56'31"	45.00'	12.03'	S4°00'41"E	23.25'
PA: C134	51.49'	10°00'00"	295.00'	25.81'	S23°58'56"E	51.42'
PA: C135	9.24'	5°34'31"	95.00'	4.63'	N8°37'11"E	9.24'
PA: C136	30.31'	34°43'40"	50.00'	15.63'	S5°57'24"E	29.84'
PA: C137	67.14'	26°04'40"	147.52'	34.16'	S36°21'33"E	66.56'
PA: C138	10.71'	11°09'14"	55.00'	5.37'	N27°13'47"W	10.69'
PA: C139	15.59'	16°14'11"	55.00'	7.85'	N13°32'04"W	15.53'
PA: C140	4.29'	12°17'44"	20.00'	2.15'	N0°43'53"E	4.28'
PA: C141	9.14'	26°11'54"	20.00'	4.65'	N19°58'42"E	9.07'
PA: C142	6.56'	37°35'51"	10.00'	3.40'	S14°16'43"W	6.44'
PA: C143	6.16'	35°18'29"	10.00'	3.18'	S22°10'27"E	6.07'
PA: C144	15.89'	45°31'51"	20.00'	8.39'	N17°03'46"W	15.48'
PA: C145	40.70'	80°24'25"	29.00'	24.51'	S69°16'39"E	37.44'
PA: C162	22.84'	34°41'13"	37.73'	11.78'	S55°28'38"W	22.49'
PA: C163	5.00'	1°38'14"	175.00'	2.50'	N37°49'20"W	5.00'
PA: C164	5.00'	1°38'14"	175.00'	2.50'	N36°11'06"W	5.00'
PA: C165	20.27'	41°53'35"	27.73'	10.61'	S59°04'49"W	19.82'
PA: C166	4.91'	7°27'32"	37.73'	2.46'	S76°33'00"W	4.91'
PA: C167	22.14'	45°45'19"	27.73'	11.70'	N77°05'44"W	21.56'
PA: C168	29.96'	45°30'09"	37.73'	15.82'	N76°58'09"W	29.18'
PA: C169	9.11'	34°48'51"	15.00'	4.70'	N11°34'30"W	8.97'
PA: C170	3.04'	34°48'51"	5.00'	1.57'	N11°34'30"W	2.99'
PA: C171	15.93'	16°35'29"	55.00'	8.02'	N41°06'09"W	15.87'
PA: C172	13.03'	16°35'29"	45.00'	6.56'	N41°06'09"W	12.99'
PA: C500	47.89'	57°45'47"	47.50'	26.20'	N84°48'34"W	45.88'
PA: C501	10.58'	12°45'57"	47.50'	5.31'	N49°32'42"W	10.56'
PA: C502	5.56'	6°42'15"	47.50'	2.78'	N39°48'36"W	5.55'
PA: C503	28.58'	50°23'15"	32.50'	15.29'	S61°39'06"E	27.67'
PA: C504	11.26'	19°51'30"	32.50'	5.69'	N83°13'31"E	11.21'
PA: C505	3.83'	6°45'33"	32.50'	1.92'	N69°55'00"E	3.83'
PA: C506	42.83'	96°14'18"	25.50'	28.44'	N65°20'38"W	37.97'
PA: C507	44.98'	68°43'04"	37.50'	25.64'	N17°08'03"E	42.33'
PA: C508	5.13'	25°33'49"	11.50'	2.61'	S38°42'41"W	5.09'
PA: C509	10.86'	13°05'47"	47.50'	5.45'	N32°28'40"E	10.83'
PA: C510	22.52'	39°40'57"	32.52'	11.73'	S19°10'46"W	22.07'
PA: C511	128.67'	10°39'18"	691.89'	64.52'	N4°11'53"E	128.48'
PA: C512	93.99'	64°53'01"	83.00'	52.76'	S22°54'58"E	89.05'

PEDESTRIAN ACCESS ESMT.

CURVE #	LENGTH	DELTA	RADIUS	TANGENT	BEARING	CHORD
PA: C513	5.03'	6°49'45"	42.23'	2.52'	S75°06'38"E	5.03'
PA: C514	32.24'	67°10'29"	27.50'	18.26'	N44°56'16"W	30.43'
PA: C515	8.71'	19°57'38"	25.00'	4.40'	S21°19'50"E	8.67'
PA: C516	3.94'	22°33'56"	10.00'	2.00'	N20°01'42"W	3.91'
PA: C517	25.79'	65°40'41"	22.50'	14.52'	N60°38'07"W	24.40'
PA: C518	97.88'	68°47'20"	81.52'	55.81'	S59°04'47"E	92.10'
PA: C519	10.81'	82°35'35"	7.50'	6.59'	S47°55'35"E	9.90'
PA: C520	38.91'	0°05'54"	22666.79'	19.45'	S71°00'38"W	38.91'
PA: C521	32.06'	122°26'58"	15.00'	27.31'	S71°05'34"W	26.30'
PA: C522	16.49'	0°02'30"	22666.79'	8.25'	S71°08'49"W	16.49'
PA: C523	78.46'	49°57'06"	90.00'	41.92'	N83°51'23"W	76.00'
PA: C524	104.79'	75°03'12"	80.00'	61.45'	N71°18'20"W	97.46'
PA: C525	21.81'	83°18'46"	15.00'	13.34'	N33°25'52"E	19.94'
PA: C526	13.37'	61°17'05"	12.50'	7.40'	S48°06'22"E	12.74'
PA: C527	56.93'	72°29'12"	45.00'	32.99'	N42°30'18"W	53.21'
PA: C528	18.76'	23°53'10"	45.00'	9.52'	N5°40'53"E	18.62'
PA: C529	16.56'	31°37'41"	30.00'	8.50'	N33°26'19"E	16.35'
PA: C530	9.93'	37°56'56"	15.00'	5.16'	S30°16'42"W	9.75'
PA: C531	16.56'	37°56'56"	25.00'	8.60'	S30°16'42"W	16.26'
PA: C532	11.04'	31°37'41"	20.00'	5.66'	N33°26'19"E	10.90'
PA: C533	14.59'	23°53'10"	35.00'	7.40'	N5°40'53"E	14.49'
PA: C534	44.28'	72°29'12"	35.00'	25.66'	N42°30'18"W	41.39'
PA: C535	25.23'	82°35'35"	17.50'	15.37'	S47°55'35"E	23.10'
PA: C536	109.57'	68°35'23"	91.52'	62.42'	S59°10'46"E	103.14'
PA: C537	18.95'	86°50'39"	12.50'	11.83'	N50°03'07"W	17.18'
PA: C538	13.80'	22°02'36"	35.87'	6.99'	S20°10'02"E	13.72'
PA: C539	20.52'	67°10'29"	17.50'	11.62'	N44°56'16"W	19.36'
PA: C540	6.23'	6°49'45"	52.23'	3.12'	S75°06'38"E	6.22'
PA: C541	101.86'	62°45'11"	93.00'	56.72'	S21°51'03"E	96.84'
PA: C542	126.89'	10°39'42"	681.89'	63.63'	N4°11'41"E	126.70'
PA: C543	29.45'	39°42'09"	42.50'	15.34'	S19°10'29"W	28.86'
PA: C544	8.57'	13°05'47"	37.50'	4.30'	N32°28'40"E	8.55'
PA: C545	9.59'	25°33'49"	21.50'	4.88'	S38°42'41"W	9.51'
PA: C546	32.98'	68°43'04"	27.50'	18.80'	N17°08'03"E	31.04'
PA: C547	26.03'	96°14'18"	15.50'	17.29'	N65°20'38"W	23.08'
PA: C548	5.01'	6°45'33"	42.50'	2.51'	N69°55'00"E	5.01'
PA: C549	14.73'	19°51'30"	42.50'	7.44'	N83°13'31"E	14.66'
PA: C550	37.38'	50°23'15"	42.50'	19.99'	S61°39'06"E	36.18'
PA: C551	4.39'	6°42'15"	37.50'	2.20'	N39°48'36"W	4.39'
PA: C552	8.36'	12°45'57"	37.50'	4.19'	N49°32'42"W	8.34'
PA: C553	37.81'	57°45'47"	37.50'	20.69'	N84°48'34"W	36.22'
PA: C554	43.66'	13°53'56"	180.00'	21.94'	S82°16'25"E	43.56'
PA: C555	41.24'	13°53'56"	170.00'	20.72'	N82°16'25"W	41.14'
PA: C556	5.68'	3°25'28"	95.00'	2.84'	S77°02'10"E	5.68'
PA: C557	23.67'	16°20'16"	83.00'	11.91'	S63°31'37"E	23.59'
PA: C558	29.98'	18°28'06"	93.00'	15.12'	S62°27'42"E	29.85'
PA: C559	6.28'	3°25'28"	105.00'	3.14'	S77°02'10"E	6.27'
PA: C560	8.31'	21°09'58"	22.50'	4.20'	N17°12'47"W	8.26'
PA: C562	29.63'	56°34'48"	30.00'	16.15'	N39°35'38"E	28.44'
PA: C563	19.75'	56°34'48"	20.00'	10.76'	N39°35'38"E	18.96'
PA: C564	9.19'	9°34'37"	55.00'	4.61'	S63°05'43"W	9.18'
PA: C565	7.52'	9°34'37"	45.00'	3.77'	S63°05'43"W	7.51'
PA: C566	17.65'	22°28'03"	45.00'	8.94'	N69°32'26"E	17.53'
PA: C567	7.07'	7°22'01"	55.00'	3.54'	S77°05'28"W	7.07'
PA: C568	4.83'	6°08'55"	45.00'	2.42'	N76°28'55"E	4.83'
PA: C569	17.63'	12°37'42"	80.00'	8.85'	S73°14'31"W	17.60'
PA: C570	70.72'	27°56'41"	145.00'	36.08'	N80°54'00"E	70.02'
PA: C571	11.08'	6°26'38"	98.56'	5.55'	N88°20'58"W	11.08'
PA: C572	56.54'	249°11'01"	13.00'	18.85'	S82°11'42"W	21.40'
PA: C573	17.80'	10°20'45"	98.56'	8.92'	S70°47'19"W	17.77'
PA: C574	14.79'	8°55'08"	95.00'	7.41'	N70°04'31"E	14.77'
PA: C575	45.22'	29°15'24"	88.56'	23.12'	S80°14'39"W	44.73'
PA: C576	1.51'	0°33'24"	155.00'	0.75'	S85°24'21"E	1.51'
PA: C577	16.34'	8°55'08"	105.00'	8.19'	N70°04'31"E	16.33'
PA: C578	15.65'	8°32'31"	105.00'	7.84'	S70°15'49"W	15.64'
PA: C579	14.16'	8°32'31"	95.00'	7.09'	S70°15'49"W	14.15'
PA: C580	16.45'	94°13'45"	10.00'	10.77'	S66°53'34"E	14.65'
PA: C581	6.60'	27°01'21"	14.00'	3.36'	N33°17'22"W	6.54'
PA: C582	6.26'	89°42'08"	4.00'	3.98'	N64°37'46"W	5.64'
PA: C583	10.41'	29°48'33"	20.00'	5.32'	S34°40'59"E	10.29'

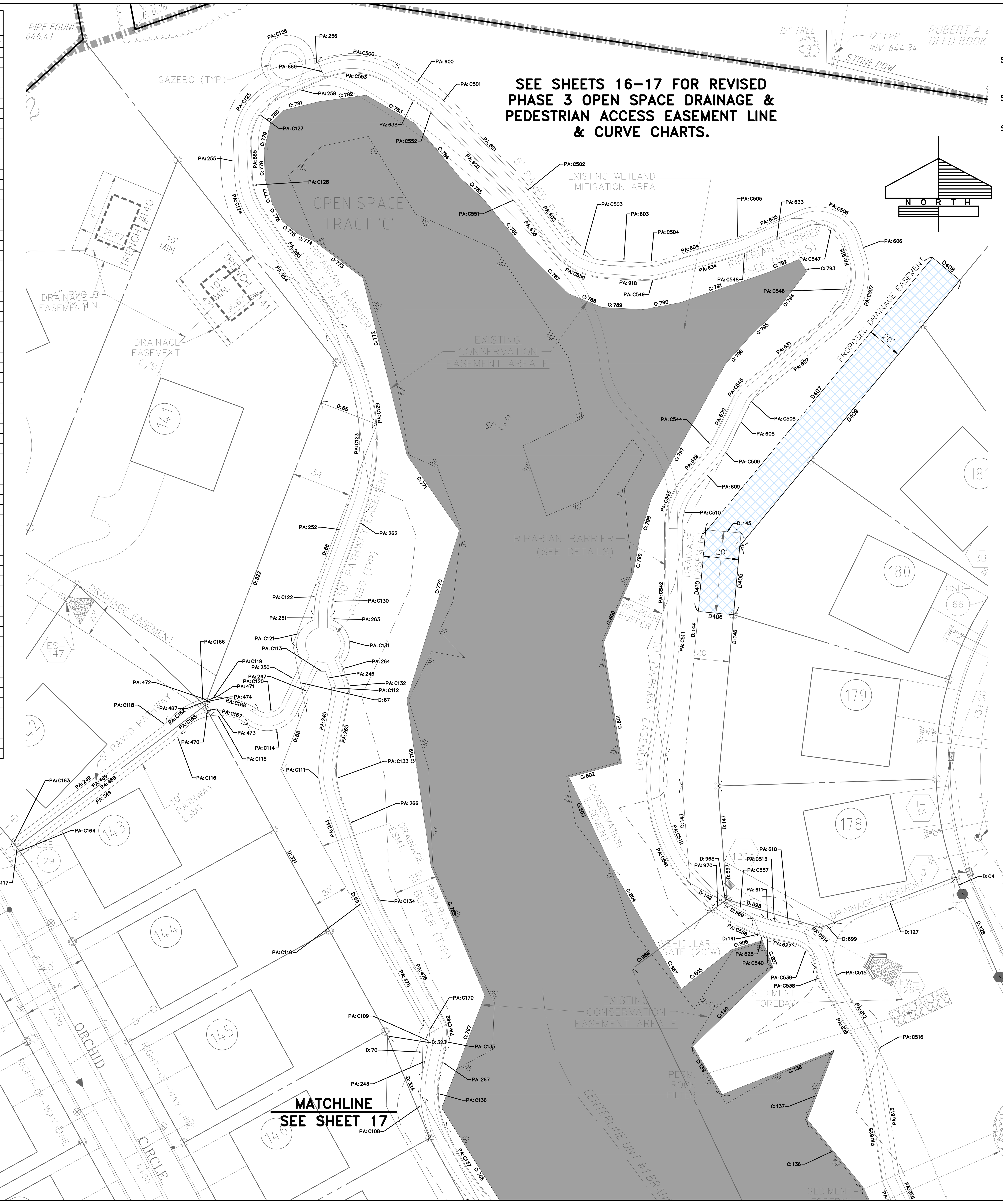

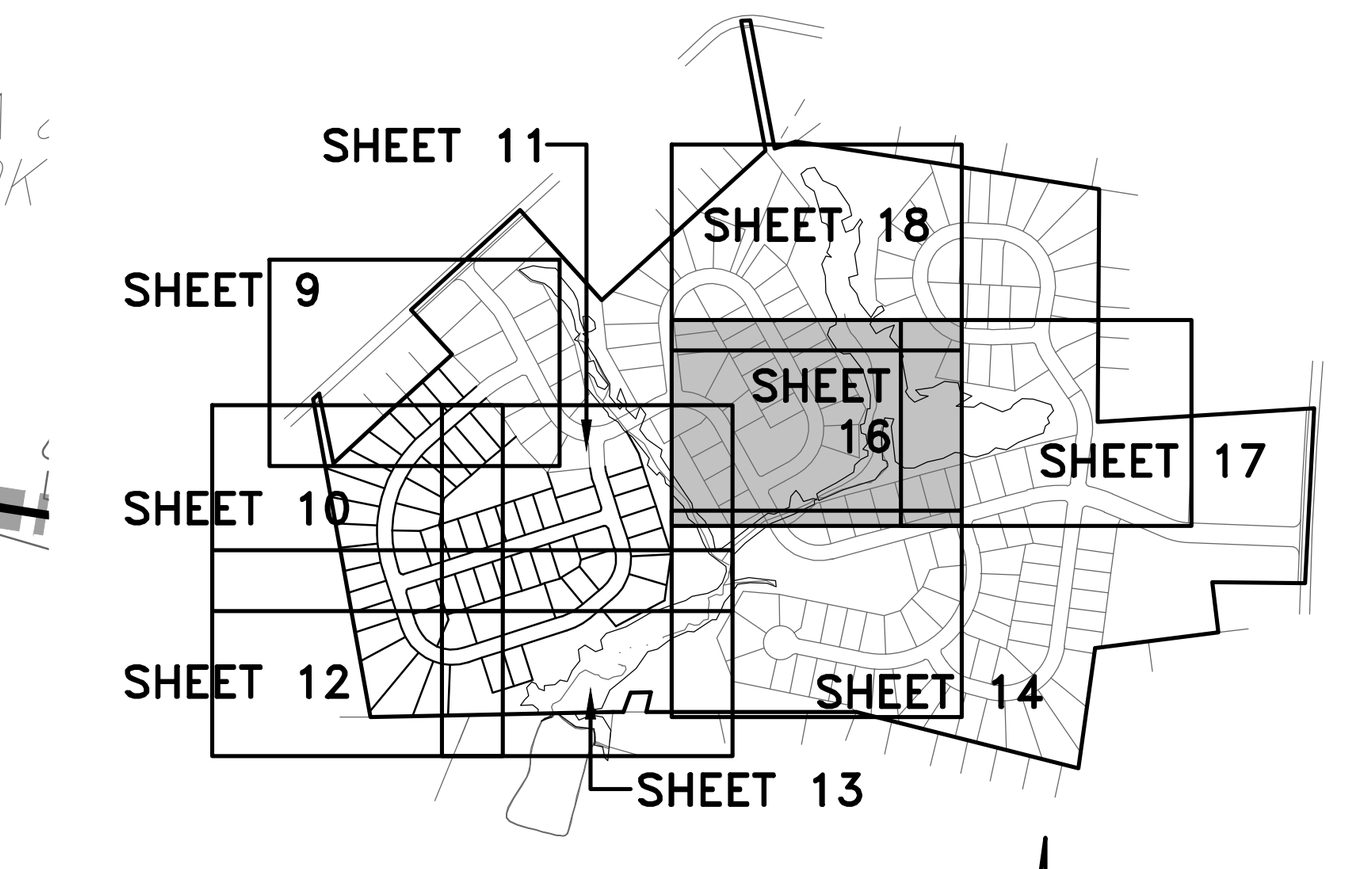

KEY MAP
SCALE: 1"=1000'

LEGEND

- EXISTING WETLANDS BOUNDARY
- EXISTING ADJOINER LINE
- EXISTING BOUNDARY LINE
- EXISTING CENTERLINE
- PROPOSED CENTERLINE
- EXISTING EDGE OF CARTWAY
- PROPOSED EDGE OF PAVEMENT/CURB
- EXISTING RIGHT-OF-WAY LINE
- PROPOSED RIGHT-OF-WAY LINE
- PROPOSED LOT LINE
- EXISTING EASEMENT LINE
- PROPOSED EASEMENT LINE
- PROPOSED CLEAR SIGHT TRIANGLE (C.S.T.)
- EXISTING FENCE
- EXISTING GUIDE RAIL
- EXISTING RIPARIAN BARRIER
- PROPOSED FENCE
- PROPOSED GUIDE RAIL
- PROPOSED RIPARIAN BARRIER
- EXISTING SIGN
- PROPOSED SIGNS
- EXISTING LOT MARKER
- BENCHMARK
- EXISTING VEGETATION (SHRUB, TREE)
- EXISTING TREELINE/BRUSHLINE
- PROPOSED TREELINE
- EXISTING UTILITY POLE W/ GUY WIRE
- EXISTING OVERHEAD ELECTRIC (OE)
- EXISTING UNDERGROUND ELECTRIC (UE)
- EXISTING ELECTRIC BOX
- EXISTING LIGHT
- PROPOSED STREET LIGHT
- EXISTING WATERLINE (W)
- EXISTING WATER VALVE (WV)
- EXISTING FIRE HYDRANT
- EXISTING SANITARY SEWER MANHOLE
- EXISTING GRAVITY SANITARY SEWER (S)
- EXISTING STORM PIPE (CMP)
- EXISTING STORM MANHOLE
- EXISTING STORM INLET
- EXISTING STORM HEADWALL/ENDWALL
- EXISTING GAS LINE (G)
- EXISTING GAS VALVE (GV)
- PROPOSED PAVED PATH
- PROPOSED CONCRETE SIDEWALK
- PROPOSED LOT NUMBER (100)
- ZONING BOUNDARY
- PROPOSED DRAINAGE EASEMENT
- PROPOSED PATHWAY EASEMENT
- PROPOSED SANITARY SEWER EASEMENT
- PROPOSED PRIVATE UTILITY EASEMENT (FOR LOTS 64, 65 & 66 ACCESS)
- BRIAR RIDGE DEVELOPMENT SANITARY SEWER EASEMENT (NOT PROPOSED AS A PART OF SWEET BRIAR PLANS)
- AREA OF EXISTING CONSERVATION EASEMENT
- EXISTING EASEMENT TO BE VACATED
- EASEMENT TIE-DOWN

NO.	DATE	REVISION
2	4-25-22	REVISED PER NLT, LEB. CO. ENGINEER & CITY OF LEB. AUTHORITY
1	2-1-22	REVISED PER NLT, LEB. CO. ENGINEER, LCPD, NLTMA, & CITY OF LEB. AUTHORITY

FOR PIONEER MANAGEMENT BY:

FIELDBOOK NO.: VALUE
SURV. CHIEF: RC
CHKD BY: RC
DRAWN BY: RC
MANAGER: JAMES C. HENKE
DESIGN BY: JDB/KWG
CHKD BY: JDB/JCH
DRAWING REFERENCE: F:\12\12-0950-02\CAD\Final-Ph4\Easement.dwg

XREFS:
TB [F:\12\12-0950-02\CAD\Final-Ph4\X-refs\TB.dwg]
Key Map [F:\12\12-0950-02\CAD\Final-Ph4\X-refs\KeyMap.dwg]
X-Base [F:\12\12-0950-02\CAD\Final-Ph4\X-refs\X-Base.dwg]
Esmt-Dim-Base [F:\12\12-0950-02\CAD\Final-Ph4\C3D Bases\Esmt-Dim-Base.dwg]
P-Base [F:\12\12-0950-02\CAD\Final-Ph4\X-refs\P-Base.dwg]
Ph1-AB-block [F:\12\12-0950-02\CAD\Final-Ph4\X-refs\Ph1-AB-block.dwg]
Ph1-CB-block [F:\12\12-0950-02\CAD\Final-Ph4\X-refs\Ph1-CB-block.dwg]
Street-Alignments-Base [F:\12\12-0950-02\CAD\Final-Ph4\C3D Bases\Street-Alignments-Base.dwg]
Ph2-AB-block [F:\12\12-0950-02\CAD\Final-Ph4\X-refs\Ph2-AB-block.dwg]
Esmt-Dim-Base-PH3 [F:\12\12-0950-02\CAD\Final-Ph4\C3D Bases\Esmt-Dim-Base-PH3.dwg]

CLIENT
LANDMARK HOMES AT SWEETBRIAR
c/o MR. CLIFF WEAVER
1737 WEST MAIN STREET
EPHRATA, PA 17522
(717) 733-1536

SCALE
1" = 30'
0 15' 30' 60' 90'

PIONEER
Management, LLC
111 Millersville Road, Lancaster, PA 17603
Phone (717) 481-5500 · Fax (717) 481-4955
Email: jh@pioneermanagementllc.com
Website: www.pioneermanagementllc.com

REVISED PHASE 3 OPEN SPACE EASEMENT PLAN
FINAL PHASE 4 & REVISED FINAL PHASE 3 SUBDIVISION PLAN
FOR
THE CROSSINGS AT SWEET BRIAR
NORTH LEBANON TOWNSHIP LEBANON COUNTY, PA

DATE: JUNE 25, 2021
SHEET NO. 18 OF 43
DWG. NO. 12-0950-02-F

STREET TREE PLANTING SCHEDULE

SYMBOL	BOTANICAL NAME	COMMON NAME	MIN. SIZE	ROOT	QUANTITY	COMMENTS
		SHADE & STREET TREES				
AR	ACER RUBRUM 'OCTOBER GLORY'	OCTOBER GLORY RED MAPLE	1-1/2" TO 2" CAL. DBH/8' HT.	B&B	4	FULL HEAD
FA	FRAXINUS AMERICANA 'AUTUMN APPLAUSE'	AUTUMN APPLAUSE WHITE ASH	1-1/2" TO 2" CAL. DBH/8' HT.	B&B	13	FULL HEAD
GT	GLEDITSIA TRIACANTHOS INERMIS 'SKYLINE'	SKYLINE HONEYLOCUST	1-1/2" TO 2" CAL. DBH/8' HT.	B&B	21	FULL HEAD
NS	NYSSA SYLVATICA	BLACK OR SOUR GUM	1-1/2" TO 2" CAL. DBH/8' HT.	B&B	8	FULL HEAD
QC	QUERCUS COCCINEA	SCARLET OAK	1-1/2" TO 2" CAL. DBH/8' HT.	B&B	1	FULL HEAD
QI	QUERCUS IMBRICARIA	SHINGLE OAK	1-1/2" TO 2" CAL. DBH/8' HT.	B&B	9	FULL HEAD
TC	TILIA CORDATA 'GREENSPIRE'	GREENSPIRE LINDEN	1-1/2" TO 2" CAL. DBH/8' HT.	B&B	14	FULL HEAD

LANDSCAPE NOTES:

1. THIS PLANTING SCHEDULE REPRESENTS ALL PLANTINGS FOR PHASE 4.
2. ALL VARIETIES ARE TO BE USED, AS SPECIFIED, OR AN APPROVED EQUAL.
3. ALL PLANTING MATERIALS MUST BE REGIONAL AND NATIONAL NURSERY STANDARDS AND BE APPROVED STOCK FREE OF PESTS.
4. ALL TREES MUST BE STAKED AND GUYED, WHEN NECESSARY.
5. ALL PLANTING MOUNDS AND BEDS SHALL BE MULCHED TO A DEPTH OF 4", UNLESS OTHERWISE SPECIFIED.
6. ALL EXISTING VEGETATION IS TO BE EVALUATED AND IS TO BE EITHER KEPT AS IS OR TRANSPLANTED IF FEASIBLE.
7. SEE SHEET 43 FOR SEED MIX TO BE UTILIZED WITHIN THE BASIN (ERNMX-127 SEEDING).

NOTES:

1. SEE SHEET 40 FOR PLANTING DETAILS.
2. WHERE NECESSARY FOR MAINTENANCE PURPOSES, PROVIDE GROUND COVER PLANTINGS ON SLOPES OF 2:1 OR GREATER. SEE SHEET 43 FOR GROUND COVER MIX (ERNMX-181 SEEDING) THAT CAN BE USED.

LEGEND

- EXISTING WETLANDS BOUNDARY
- EXISTING ADJOINER LINE
- EXISTING BOUNDARY LINE
- EXISTING CENTERLINE
- PROPOSED CENTERLINE
- EXISTING EDGE OF CARTWAY
- PROPOSED EDGE OF PAVEMENT/CURB
- EXISTING RIGHT-OF-WAY LINE
- PROPOSED RIGHT-OF-WAY LINE
- PROPOSED LOT LINE
- EXISTING EASEMENT LINE
- PROPOSED EASEMENT LINE
- PROPOSED CLEAR SIGHT TRIANGLE (C.S.T.)
- EXISTING FENCE
- EXISTING GUIDE RAIL
- EXISTING RIPARIAN BARRIER
- PROPOSED FENCE
- PROPOSED GUIDE RAIL
- PROPOSED RIPARIAN BARRIER
- EXISTING SIGN
- PROPOSED SIGNS (SEE PLAN FOR DESIGNATION)
- EXISTING LOT MARKER
- BENCHMARK
- EXISTING VEGETATION (SHRUB TREE)
- PROPOSED STREET TREE (SEE PLAN & & CHART FOR QUANTITIES OF SPECIES)
- EXISTING TREELINE/BRUSHLINE
- PROPOSED TREELINE
- EXISTING UTILITY POLE W/ GUY WIRE
- EXISTING OVERHEAD ELECTRIC (OE)
- EXISTING UNDERGROUND ELECTRIC (UE)
- EXISTING ELECTRIC BOX (E)
- EXISTING LIGHT
- PROPOSED STREET LIGHT (P)
- EXISTING WATERLINE (6"W)
- PROPOSED WATERLINE
- EXISTING WATER VALVE (W.V.)
- EXISTING FIRE HYDRANT
- PROPOSED FIRE HYDRANT
- EXISTING SANITARY SEWER MANHOLE (S)
- EXISTING GRAVITY SANITARY SEWER (S)
- PROPOSED SANITARY SEWER MANHOLE
- PROPOSED SANITARY SEWER LINE
- EXISTING STORM PIPE (CMP)
- EXISTING STORM MANHOLE
- EXISTING STORM INLET
- EXISTING STORM HEADWALL/ENDWALL
- EXISTING GAS LINE (G)
- EXISTING GAS VALVE (G.V.)
- PROPOSED STORM PIPE
- PROPOSED STORM MANHOLE
- PROPOSED STORM INLET
- PROPOSED STORM HEADWALL/ENDWALL
- PROPOSED FLARED END SECTION
- PROPOSED PIPE OUTLET PROTECTION
- PROPOSED PAVED PATH/ CONCRETE SIDEWALK
- PEDESTRIAN CROSSWALK
- PROPOSED DRIVEWAY
- PROPOSED LOT NUMBER (100)
- ERNMX-127 SEEDING & SOIL AMENDMENT

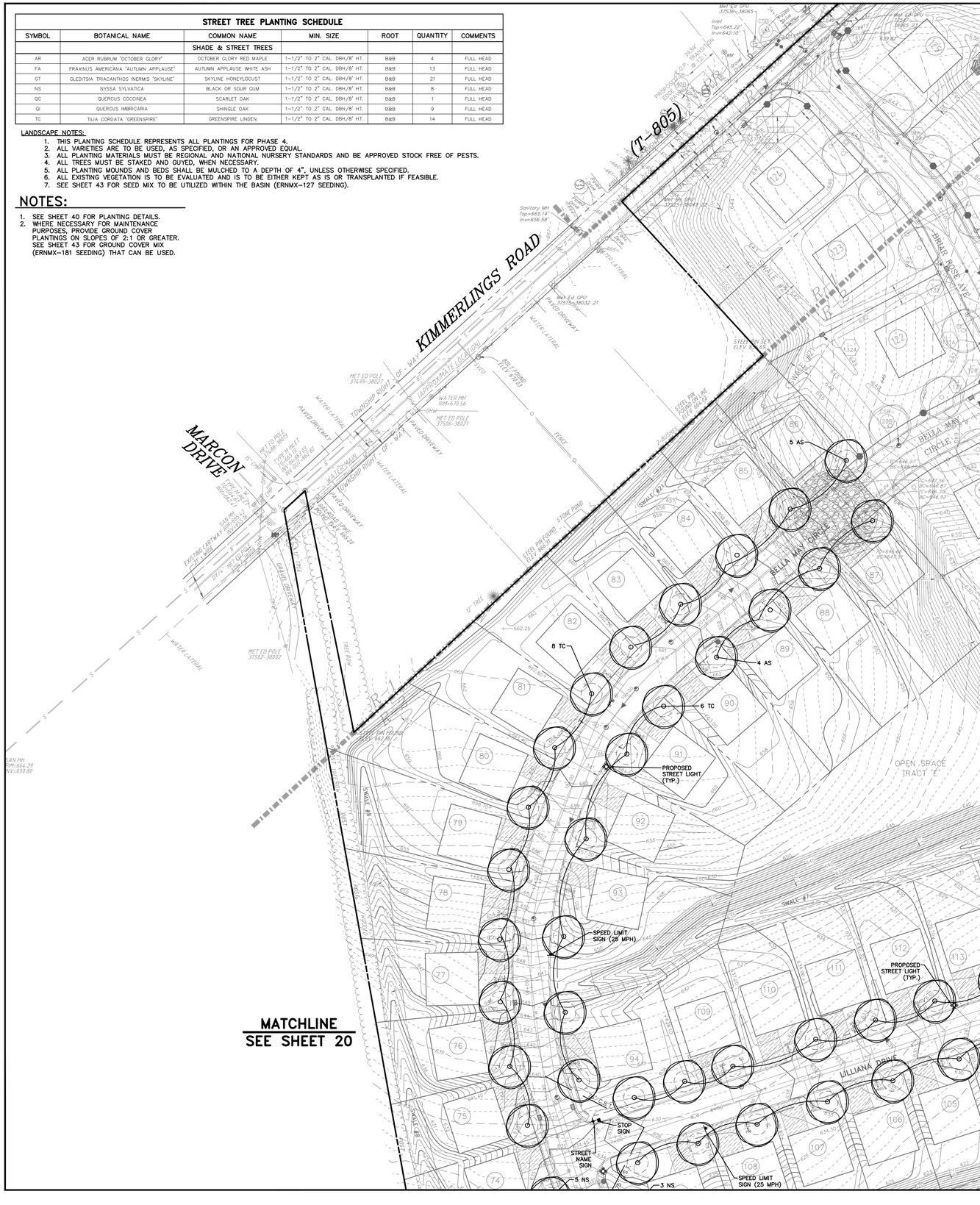
KIMMERLINGS ROAD
MARCON DRIVE
BELLA MAY CIRCLE
LILLIANA DRIVE
BRIAR ROSE AVENUE
SWALE #1
SWALE #2
SWALE #3
SWALE #4
SWALE #5
SWALE #6
SWALE #7
SWALE #8
SWALE #9
OPEN SPACE TRACT 'E'
OPEN SPACE TRACT 'F'
OPEN SPACE TRACT 'G'
OPEN SPACE TRACT 'H'
OPEN SPACE TRACT 'I'
OPEN SPACE TRACT 'J'
OPEN SPACE TRACT 'K'
OPEN SPACE TRACT 'L'
OPEN SPACE TRACT 'M'
OPEN SPACE TRACT 'N'
OPEN SPACE TRACT 'O'
OPEN SPACE TRACT 'P'
OPEN SPACE TRACT 'Q'
OPEN SPACE TRACT 'R'
OPEN SPACE TRACT 'S'
OPEN SPACE TRACT 'T'
OPEN SPACE TRACT 'U'
OPEN SPACE TRACT 'V'
OPEN SPACE TRACT 'W'
OPEN SPACE TRACT 'X'
OPEN SPACE TRACT 'Y'
OPEN SPACE TRACT 'Z'
OPEN SPACE TRACT 'AA'
OPEN SPACE TRACT 'BB'
OPEN SPACE TRACT 'CC'
OPEN SPACE TRACT 'DD'
OPEN SPACE TRACT 'EE'
OPEN SPACE TRACT 'FF'
OPEN SPACE TRACT 'GG'
OPEN SPACE TRACT 'HH'
OPEN SPACE TRACT 'II'
OPEN SPACE TRACT 'JJ'
OPEN SPACE TRACT 'KK'
OPEN SPACE TRACT 'LL'
OPEN SPACE TRACT 'MM'
OPEN SPACE TRACT 'NN'
OPEN SPACE TRACT 'OO'
OPEN SPACE TRACT 'PP'
OPEN SPACE TRACT 'QQ'
OPEN SPACE TRACT 'RR'
OPEN SPACE TRACT 'SS'
OPEN SPACE TRACT 'TT'
OPEN SPACE TRACT 'UU'
OPEN SPACE TRACT 'VV'
OPEN SPACE TRACT 'WW'
OPEN SPACE TRACT 'XX'
OPEN SPACE TRACT 'YY'
OPEN SPACE TRACT 'ZZ'
OPEN SPACE TRACT 'AAA'
OPEN SPACE TRACT 'BBB'
OPEN SPACE TRACT 'CCC'
OPEN SPACE TRACT 'DDD'
OPEN SPACE TRACT 'EEE'
OPEN SPACE TRACT 'FFF'
OPEN SPACE TRACT 'GGG'
OPEN SPACE TRACT 'HHH'
OPEN SPACE TRACT 'III'
OPEN SPACE TRACT 'JJJ'
OPEN SPACE TRACT 'KKK'
OPEN SPACE TRACT 'LLL'
OPEN SPACE TRACT 'MMM'
OPEN SPACE TRACT 'NNN'
OPEN SPACE TRACT 'OOO'
OPEN SPACE TRACT 'PPP'
OPEN SPACE TRACT 'QQQ'
OPEN SPACE TRACT 'RRR'
OPEN SPACE TRACT 'SSS'
OPEN SPACE TRACT 'TTT'
OPEN SPACE TRACT 'UUU'
OPEN SPACE TRACT 'VVV'
OPEN SPACE TRACT 'WWW'
OPEN SPACE TRACT 'XXX'
OPEN SPACE TRACT 'YYY'
OPEN SPACE TRACT 'ZZZ'
OPEN SPACE TRACT 'AAAA'
OPEN SPACE TRACT 'BBBB'
OPEN SPACE TRACT 'CCCC'
OPEN SPACE TRACT 'DDDD'
OPEN SPACE TRACT 'EEEE'
OPEN SPACE TRACT 'FFFF'
OPEN SPACE TRACT 'GGGG'
OPEN SPACE TRACT 'HHHH'
OPEN SPACE TRACT 'IIII'
OPEN SPACE TRACT 'JJJJ'
OPEN SPACE TRACT 'KKKK'
OPEN SPACE TRACT 'LLLL'
OPEN SPACE TRACT 'MMMM'
OPEN SPACE TRACT 'NNNN'
OPEN SPACE TRACT 'OOOO'
OPEN SPACE TRACT 'PPPP'
OPEN SPACE TRACT 'QQQQ'
OPEN SPACE TRACT 'RRRR'
OPEN SPACE TRACT 'SSSS'
OPEN SPACE TRACT 'TTTT'
OPEN SPACE TRACT 'UUUU'
OPEN SPACE TRACT 'VVVV'
OPEN SPACE TRACT 'WWWW'
OPEN SPACE TRACT 'XXXX'
OPEN SPACE TRACT 'YYYY'
OPEN SPACE TRACT 'ZZZZ'
OPEN SPACE TRACT 'AAAAA'
OPEN SPACE TRACT 'BBBBB'
OPEN SPACE TRACT 'CCCCC'
OPEN SPACE TRACT 'DDDDD'
OPEN SPACE TRACT 'EEEEE'
OPEN SPACE TRACT 'FFFFF'
OPEN SPACE TRACT 'GGGGG'
OPEN SPACE TRACT 'HHHHH'
OPEN SPACE TRACT 'IIIII'
OPEN SPACE TRACT 'JJJJJ'
OPEN SPACE TRACT 'KKKKK'
OPEN SPACE TRACT 'LLLLL'
OPEN SPACE TRACT 'MMMMM'
OPEN SPACE TRACT 'NNNNN'
OPEN SPACE TRACT 'OOOOO'
OPEN SPACE TRACT 'PPPPP'
OPEN SPACE TRACT 'QQQQQ'
OPEN SPACE TRACT 'RRRRR'
OPEN SPACE TRACT 'SSSSS'
OPEN SPACE TRACT 'TTTTT'
OPEN SPACE TRACT 'UUUUU'
OPEN SPACE TRACT 'VVVVV'
OPEN SPACE TRACT 'WWWWW'
OPEN SPACE TRACT 'XXXXX'
OPEN SPACE TRACT 'YYYYY'
OPEN SPACE TRACT 'ZZZZZ'
OPEN SPACE TRACT 'AAAAAA'
OPEN SPACE TRACT 'BBBBBB'
OPEN SPACE TRACT 'CCCCCC'
OPEN SPACE TRACT 'DDDDDD'
OPEN SPACE TRACT 'EEEEEE'
OPEN SPACE TRACT 'FFFFFF'
OPEN SPACE TRACT 'GGGGGG'
OPEN SPACE TRACT 'HHHHHH'
OPEN SPACE TRACT 'IIIIII'
OPEN SPACE TRACT 'JJJJJJ'
OPEN SPACE TRACT 'KKKKKK'
OPEN SPACE TRACT 'LLLLLL'
OPEN SPACE TRACT 'MMMMMM'
OPEN SPACE TRACT 'NNNNNN'
OPEN SPACE TRACT 'OOOOOO'
OPEN SPACE TRACT 'PPPPPP'
OPEN SPACE TRACT 'QQQQQQ'
OPEN SPACE TRACT 'RRRRRR'
OPEN SPACE TRACT 'SSSSSS'
OPEN SPACE TRACT 'TTTTTT'
OPEN SPACE TRACT 'UUUUUU'
OPEN SPACE TRACT 'VVVVVV'
OPEN SPACE TRACT 'WWWWWW'
OPEN SPACE TRACT 'XXXXXX'
OPEN SPACE TRACT 'YYYYYY'
OPEN SPACE TRACT 'ZZZZZZ'
OPEN SPACE TRACT 'AAAAAAA'
OPEN SPACE TRACT 'BBBBBBB'
OPEN SPACE TRACT 'CCCCCCC'
OPEN SPACE TRACT 'DDDDDDD'
OPEN SPACE TRACT 'EEEEEEE'
OPEN SPACE TRACT 'FFFFFFF'
OPEN SPACE TRACT 'GGGGGGG'
OPEN SPACE TRACT 'HHHHHHH'
OPEN SPACE TRACT 'IIIIIII'
OPEN SPACE TRACT 'JJJJJJJ'
OPEN SPACE TRACT 'KKKKKKK'
OPEN SPACE TRACT 'LLLLLLL'
OPEN SPACE TRACT 'MMMMMMM'
OPEN SPACE TRACT 'NNNNNNN'
OPEN SPACE TRACT 'OOOOOOO'
OPEN SPACE TRACT 'PPPPPPP'
OPEN SPACE TRACT 'QQQQQQQ'
OPEN SPACE TRACT 'RRRRRRR'
OPEN SPACE TRACT 'SSSSSSS'
OPEN SPACE TRACT 'TTTTTTT'
OPEN SPACE TRACT 'UUUUUUU'
OPEN SPACE TRACT 'VVVVVVV'
OPEN SPACE TRACT 'WWWWWWW'
OPEN SPACE TRACT 'XXXXXXX'
OPEN SPACE TRACT 'YYYYYYY'
OPEN SPACE TRACT 'ZZZZZZZ'
OPEN SPACE TRACT 'AAAAAAAA'
OPEN SPACE TRACT 'BBBBBBBB'
OPEN SPACE TRACT 'CCCCCCCC'
OPEN SPACE TRACT 'DDDDDDDD'
OPEN SPACE TRACT 'EEEEEEEE'
OPEN SPACE TRACT 'FFFFFFFF'
OPEN SPACE TRACT 'GGGGGGGG'
OPEN SPACE TRACT 'HHHHHHHH'
OPEN SPACE TRACT 'IIIIIIII'
OPEN SPACE TRACT 'JJJJJJJJ'
OPEN SPACE TRACT 'KKKKKKKK'
OPEN SPACE TRACT 'LLLLLLLL'
OPEN SPACE TRACT 'MMMMMMMM'
OPEN SPACE TRACT 'NNNNNNNN'
OPEN SPACE TRACT 'OOOOOOOO'
OPEN SPACE TRACT 'PPPPPPPP'
OPEN SPACE TRACT 'QQQQQQQQ'
OPEN SPACE TRACT 'RRRRRRRR'
OPEN SPACE TRACT 'SSSSSSSS'
OPEN SPACE TRACT 'TTTTTTTT'
OPEN SPACE TRACT 'UUUUUUUU'
OPEN SPACE TRACT 'VVVVVVVV'
OPEN SPACE TRACT 'WWWWWWWW'
OPEN SPACE TRACT 'XXXXXXXX'
OPEN SPACE TRACT 'YYYYYYYY'
OPEN SPACE TRACT 'ZZZZZZZZ'
OPEN SPACE TRACT 'AAAAAAAAA'
OPEN SPACE TRACT 'BBBBBBBBB'
OPEN SPACE TRACT 'CCCCCCCCC'
OPEN SPACE TRACT 'DDDDDDDDD'
OPEN SPACE TRACT 'EEEEEEEEE'
OPEN SPACE TRACT 'FFFFFFFFF'
OPEN SPACE TRACT 'GGGGGGGGG'
OPEN SPACE TRACT 'HHHHHHHHH'
OPEN SPACE TRACT 'IIIIIIIII'
OPEN SPACE TRACT 'JJJJJJJJJ'
OPEN SPACE TRACT 'KKKKKKKKK'
OPEN SPACE TRACT 'LLLLLLLLL'
OPEN SPACE TRACT 'MMMMMMMMM'
OPEN SPACE TRACT 'NNNNNNNNN'
OPEN SPACE TRACT 'OOOOOOOOO'
OPEN SPACE TRACT 'PPPPPPPPP'
OPEN SPACE TRACT 'QQQQQQQQQ'
OPEN SPACE TRACT 'RRRRRRRRR'
OPEN SPACE TRACT 'SSSSSSSSS'
OPEN SPACE TRACT 'TTTTTTTTT'
OPEN SPACE TRACT 'UUUUUUUUU'
OPEN SPACE TRACT 'VVVVVVVVV'
OPEN SPACE TRACT 'WWWWWWWWW'
OPEN SPACE TRACT 'XXXXXXXXX'
OPEN SPACE TRACT 'YYYYYYYYY'
OPEN SPACE TRACT 'ZZZZZZZZZ'
OPEN SPACE TRACT 'AAAAAAAAAA'
OPEN SPACE TRACT 'BBBBBBBBBB'
OPEN SPACE TRACT 'CCCCCCCCCC'
OPEN SPACE TRACT 'DDDDDDDDDD'
OPEN SPACE TRACT 'EEEEEEEEEE'
OPEN SPACE TRACT 'FFFFFFFFFF'
OPEN SPACE TRACT 'GGGGGGGGGG'
OPEN SPACE TRACT 'HHHHHHHHHH'
OPEN SPACE TRACT 'IIIIIIIIII'
OPEN SPACE TRACT 'JJJJJJJJJJ'
OPEN SPACE TRACT 'KKKKKKKKKK'
OPEN SPACE TRACT 'LLLLLLLLLL'
OPEN SPACE TRACT 'MMMMMMMMMM'
OPEN SPACE TRACT 'NNNNNNNNNN'
OPEN SPACE TRACT 'OOOOOOOOOO'
OPEN SPACE TRACT 'PPPPPPPPPP'
OPEN SPACE TRACT 'QQQQQQQQQQ'
OPEN SPACE TRACT 'RRRRRRRRRR'
OPEN SPACE TRACT 'SSSSSSSSSS'
OPEN SPACE TRACT 'TTTTTTTTTT'
OPEN SPACE TRACT 'UUUUUUUUUU'
OPEN SPACE TRACT 'VVVVVVVVVV'
OPEN SPACE TRACT 'WWWWWWWWWW'
OPEN SPACE TRACT 'XXXXXXXXXX'
OPEN SPACE TRACT 'YYYYYYYYYY'
OPEN SPACE TRACT 'ZZZZZZZZZZ'
OPEN SPACE TRACT 'AAAAAAAAAAA'
OPEN SPACE TRACT 'BBBBBBBBBBB'
OPEN SPACE TRACT 'CCCCCCCCCCC'
OPEN SPACE TRACT 'DDDDDDDDDDD'
OPEN SPACE TRACT 'EEEEEEEEEEE'
OPEN SPACE TRACT 'FFFFFFFFFFF'
OPEN SPACE TRACT 'GGGGGGGGGGG'
OPEN SPACE TRACT 'HHHHHHHHHHH'
OPEN SPACE TRACT 'IIIIIIIIIII'
OPEN SPACE TRACT 'JJJJJJJJJJJ'
OPEN SPACE TRACT 'KKKKKKKKKKK'
OPEN SPACE TRACT 'LLLLLLLLLLL'
OPEN SPACE TRACT 'MMMMMMMMMMM'
OPEN SPACE TRACT 'NNNNNNNNNNN'
OPEN SPACE TRACT 'OOOOOOOOOOO'
OPEN SPACE TRACT 'PPPPPPPPPPP'
OPEN SPACE TRACT 'QQQQQQQQQQQ'
OPEN SPACE TRACT 'RRRRRRRRRRR'
OPEN SPACE TRACT 'SSSSSSSSSSS'
OPEN SPACE TRACT 'TTTTTTTTTTT'
OPEN SPACE TRACT 'UUUUUUUUUUU'
OPEN SPACE TRACT 'VVVVVVVVVVV'
OPEN SPACE TRACT 'WWWWWWWWWWW'
OPEN SPACE TRACT 'XXXXXXXXXXX'
OPEN SPACE TRACT 'YYYYYYYYYYY'
OPEN SPACE TRACT 'ZZZZZZZZZZZ'
OPEN SPACE TRACT 'AAAAAAAAAAAA'
OPEN SPACE TRACT 'BBBBBBBBBBBB'
OPEN SPACE TRACT 'CCCCCCCCCCCC'
OPEN SPACE TRACT 'DDDDDDDDDDDD'
OPEN SPACE TRACT 'EEEEEEEEEEEE'
OPEN SPACE TRACT 'FFFFFFFFFFFF'
OPEN SPACE TRACT 'GGGGGGGGGGGG'
OPEN SPACE TRACT 'HHHHHHHHHHHH'
OPEN SPACE TRACT 'IIIIIIIIIIII'
OPEN SPACE TRACT 'JJJJJJJJJJJJ'
OPEN SPACE TRACT 'KKKKKKKKKKKK'
OPEN SPACE TRACT 'LLLLLLLLLLLL'
OPEN SPACE TRACT 'MMMMMMMMMMMM'
OPEN SPACE TRACT 'NNNNNNNNNNNN'
OPEN SPACE TRACT 'OOOOOOOOOOOO'
OPEN SPACE TRACT 'PPPPPPPPPPPP'
OPEN SPACE TRACT 'QQQQQQQQQQQQ'
OPEN SPACE TRACT 'RRRRRRRRRRRR'
OPEN SPACE TRACT 'SSSSSSSSSSSS'
OPEN SPACE TRACT 'TTTTTTTTTTTT'
OPEN SPACE TRACT 'UUUUUUUUUUUU'
OPEN SPACE TRACT 'VVVVVVVVVVVV'
OPEN SPACE TRACT 'WWWWWWWWWWWW'
OPEN SPACE TRACT 'XXXXXXXXXXXX'
OPEN SPACE TRACT 'YYYYYYYYYYYY'
OPEN SPACE TRACT 'ZZZZZZZZZZZZ'
OPEN SPACE TRACT 'AAAAAAAAAAAAA'
OPEN SPACE TRACT 'BBBBBBBBBBBBB'
OPEN SPACE TRACT 'CCCCCCCCCCCCC'
OPEN SPACE TRACT 'DDDDDDDDDDDDD'
OPEN SPACE TRACT 'EEEEEEEEEEEEE'
OPEN SPACE TRACT 'FFFFFFFFFFFFF'
OPEN SPACE TRACT 'GGGGGGGGGGGGG'
OPEN SPACE TRACT 'HHHHHHHHHHHHH'
OPEN SPACE TRACT 'IIIIIIIIIIIII'
OPEN SPACE TRACT 'JJJJJJJJJJJJJ'
OPEN SPACE TRACT 'KKKKKKKKKKKKK'
OPEN SPACE TRACT 'LLLLLLLLLLLLL'
OPEN SPACE TRACT 'MMMMMMMMMMMMM'
OPEN SPACE TRACT 'NNNNNNNNNNNNN'
OPEN SPACE TRACT 'OOOOOOOOOOOOO'
OPEN SPACE TRACT 'PPPPPPPPPPPPP'
OPEN SPACE TRACT 'QQQQQQQQQQQQQ'
OPEN SPACE TRACT 'RRRRRRRRRRRRR'
OPEN SPACE TRACT 'SSSSSSSSSSSSS'
OPEN SPACE TRACT 'TTTTTTTTTTTTT'
OPEN SPACE TRACT 'UUUUUUUUUUUUU'
OPEN SPACE TRACT 'VVVVVVVVVVVVV'
OPEN SPACE TRACT 'WWWWWWWWWWWWW'
OPEN SPACE TRACT 'XXXXXXXXXXXXX'
OPEN SPACE TRACT 'YYYYYYYYYYYYY'
OPEN SPACE TRACT 'ZZZZZZZZZZZZZ'
OPEN SPACE TRACT 'AAAAAAAAAAAAAA'
OPEN SPACE TRACT 'BBBBBBBBBBBBBB'
OPEN SPACE TRACT 'CCCCCCCCCCCCCC'
OPEN SPACE TRACT 'DDDDDDDDDDDDDD'
OPEN SPACE TRACT 'EEEEEEEEEEEEEE'
OPEN SPACE TRACT 'FFFFFFFFFFFFFF'
OPEN SPACE TRACT 'GGGGGGGGGGGGGG'
OPEN SPACE TRACT 'HHHHHHHHHHHHHH'
OPEN SPACE TRACT 'IIIIIIIIIIIIII'
OPEN SPACE TRACT 'JJJJJJJJJJJJJJ'
OPEN SPACE TRACT 'KKKKKKKKKKKKKK'
OPEN SPACE TRACT 'LLLLLLLLLLLLLL'
OPEN SPACE TRACT 'MMMMMMMMMMMMMM'
OPEN SPACE TRACT 'NNNNNNNNNNNNNN'
OPEN SPACE TRACT 'OOOOOOOOOOOOOO'
OPEN SPACE TRACT 'PPPPPPPPPPPPPP'
OPEN SPACE TRACT 'QQQQQQQQQQQQQQ'
OPEN SPACE TRACT 'RRRRRRRRRRRRRR'
OPEN SPACE TRACT 'SSSSSSSSSSSSSS'
OPEN SPACE TRACT 'TTTTTTTTTTTTTT'
OPEN SPACE TRACT 'UUUUUUUUUUUUUU'
OPEN SPACE TRACT 'VVVVVVVVVVVVVV'
OPEN SPACE TRACT 'WWWWWWWWWWWWWW'
OPEN SPACE TRACT 'XXXXXXXXXXXXXX'
OPEN SPACE TRACT 'YYYYYYYYYYYYYY'
OPEN SPACE TRACT 'ZZZZZZZZZZZZZZ'
OPEN SPACE TRACT 'AAAAAAAAAAAAAAA'
OPEN SPACE TRACT 'BBBBBBBBBBBBBBB'
OPEN SPACE TRACT 'CCCCCCCCCCCCCCC'
OPEN SPACE TRACT 'DDDDDDDDDDDDDDD'
OPEN SPACE TRACT 'EEEEEEEEEEEEEEE'
OPEN SPACE TRACT 'FFFFFFFFFFFFFFF'
OPEN SPACE TRACT 'GGGGGGGGGGGGGGG'
OPEN SPACE TRACT 'HHHHHHHHHHHHHHH'
OPEN SPACE TRACT 'IIIIIIIIIIIIIII'
OPEN SPACE TRACT 'JJJJJJJJJJJJJJJ'
OPEN SPACE TRACT 'KKKKKKKKKKKKKKK'
OPEN SPACE TRACT 'LLLLLLLLLLLLLLL'
OPEN SPACE TRACT 'MMMMMMMMMMMMMMM'
OPEN SPACE TRACT 'NNNNNNNNNNNNNNN'
OPEN SPACE TRACT 'OOOOOOOOOOOOOOO'
OPEN SPACE TRACT 'PPPPPPPPPPPPPPP'
OPEN SPACE TRACT 'QQQQQQQQQQQQQQQ'
OPEN SPACE TRACT 'RRRRRRRRRRRRRRR'
OPEN SPACE TRACT 'SSSSSSSSSSSSSSS'
OPEN SPACE TRACT 'TTTTTTTTTTTTTTT'
OPEN SPACE TRACT 'UUUUUUUUUUUUUUU'
OPEN SPACE TRACT 'VVVVVVVVVVVVVVV'
OPEN SPACE TRACT 'WWWWWWWWWWWWWWW'
OPEN SPACE TRACT 'XXXXXXXXXXXXXXX'
OPEN SPACE TRACT 'YYYYYYYYYYYYYYY'
OPEN SPACE TRACT 'ZZZZZZZZZZZZZZZ'
OPEN SPACE TRACT 'AAAAAAAAAAAAAAAA'
OPEN SPACE TRACT 'BBBBBBBBBBBBBBBB'
OPEN SPACE TRACT 'CCCCCCCCCCCCCCCC'
OPEN SPACE TRACT 'DDDDDDDDDDDDDDDD'
OPEN SPACE TRACT 'EEEEEEEEEEEEEEEE'
OPEN SPACE TRACT 'FFFFFFFFFFFFFFFF'
OPEN SPACE TRACT 'GGGGGGGGGGGGGGGG'
OPEN SPACE TRACT 'HHHHHHHHHHHHHHHH'
OPEN SPACE TRACT 'IIIIIIIIIIIIIIII'
OPEN SPACE TRACT 'JJJJJJJJJJJJJJJJ'
OPEN SPACE TRACT 'KKKKKKKKKKKKKKKK'
OPEN SPACE TRACT 'LLLLLLLLLLLLLLLL'
OPEN SPACE TRACT 'MMMMMMMMMMMMMMMM'
OPEN SPACE TRACT 'NNNNNNNNNNNNNNNN'
OPEN SPACE TRACT 'OOOOOOOOOOOOOOOO'
OPEN SPACE TRACT 'PPPPPPPPPPPPPPPP'
OPEN SPACE TRACT 'QQQQQQQQQQQQQQQQ'
OPEN SPACE TRACT 'RRRRRRRRRRRRRRRR'
OPEN SPACE TRACT 'SSSSSSSSSSSSSSSS'
OPEN SPACE TRACT 'TTTTTTTTTTTTTTTT'
OPEN SPACE TRACT 'UUUUUUUUUUUUUUUU'
OPEN SPACE TRACT 'VVVVVVVVVVVVVVVV'
OPEN SPACE TRACT 'WWWWWWWWWWWWWWWW'
OPEN SPACE TRACT 'XXXXXXXXXXXXXXXX'
OPEN SPACE TRACT 'YYYYYYYYYYYYYYYY'
OPEN SPACE TRACT 'ZZZZZZZZZZZZZZZZ'
OPEN SPACE TRACT 'AAAAAAAAAAAAAAAAA'
OPEN SPACE TRACT 'BBBBBBBBBBBBBBBBB'
OPEN SPACE TRACT 'CCCCCCCCCCCCCCCCC'
OPEN SPACE TRACT 'DDDDDDDDDDDDDDDDD'
OPEN SPACE TRACT 'EEEEEEEEEEEEEEEEE'
OPEN SPACE TRACT 'FFFFFFFFFFFFFFFFF'
OPEN SPACE TRACT 'GGGGGGGGGGGGGGGGG'
OPEN SPACE TRACT 'HHHHHHHHHHHHHHHHH'
OPEN SPACE TRACT 'IIIIIIIIIIIIIIIII'
OPEN SPACE TRACT 'JJJJJJJJJJJJJJJJJ'
OPEN SPACE TRACT 'KKKKKKKKKKKKKKKKK'
OPEN SPACE TRACT 'LLLLLLLLLLLLLLLLL'
OPEN SPACE TRACT 'MMMMMMMMMMMMMMMMM'
OPEN SPACE TRACT 'NNNNNNNNNNNNNNNNN'
OPEN SPACE TRACT 'OOOOOOOOOOOOOOOOO'
OPEN SPACE TRACT 'PPPPPPPPPPPPPPPPP'
OPEN SPACE TRACT 'QQQQQQQQQQQQQQQQQ'
OPEN SPACE TRACT 'RRRRRRRRRRRRRRRRR'
OPEN SPACE TRACT 'SSSSSSSSSSSSSSSSS'
OPEN SPACE TRACT 'TTTTTTTTTTTTTTTTT'
OPEN SPACE TRACT 'UUUUUUUUUUUUUUUUU'
OPEN SPACE TRACT 'VVVVVVVVVVVVVVVVV'
OPEN SPACE TRACT 'WWWWWWWWWWWWWWWWW'
OPEN SPACE TRACT 'XXXXXXXXXXXXXXXXX'
OPEN SPACE TRACT 'YYYYYYYYYYYYYYYYY'
OPEN SPACE TRACT 'ZZZZZZZZZZZZZZZZZ'
OPEN SPACE TRACT 'AAAAAAAAAAAAAAAAAA'
OPEN SPACE TRACT 'BBBBBBBBBBBBBBBBBB'
OPEN SPACE TRACT 'CCCCCCCCCCCCCCCCCC'
OPEN SPACE TRACT 'DDDDDDDDDDDDDDDDDD'
OPEN SPACE TRACT 'EEEEEEEEEEEEEEEEEE'
OPEN SPACE TRACT 'FFFFFFFFFFFFFFFFFF'
OPEN SPACE TRACT 'GGGGGGGGGGGGGGGGGG'
OPEN SPACE TRACT 'HHHHHHHHHHHHHHHHHH'
OPEN SPACE TRACT 'IIIIIIIIIIIIIIIIII'
OPEN SPACE TRACT 'JJJJJJJJJJJJJJJJJJ'
OPEN SPACE TRACT 'KKKKKKKKKKKKKKKKKK'
OPEN SPACE TRACT 'LLLLLLLLLLLLLLLLLL'
OPEN SPACE TRACT 'MMMMMMMMMMMMMMMMMM'
OPEN SPACE TRACT 'NNNNNNNNNNNNNNNNNN'
OPEN SPACE TRACT 'OOOOOOOOOOOOOOOOOO'
OPEN SPACE TRACT 'PPPPPPPPPPPPPPPPPP'
OPEN SPACE TRACT 'QQQQQQQQQQQQQQQQQQ'
OPEN SPACE TRACT 'RRRRRRRRRRRRRRRRRR'
OPEN SPACE TRACT 'SSSSSSSSSSSSSSSSSS'
OPEN SPACE TRACT 'TTTTTTTTTTTTTTTTTT'
OPEN SPACE TRACT 'UUUUUUUUUUUUUUUUUU'
OPEN SPACE TRACT 'VVVVVVVVVVVVVVVVVV'
OPEN SPACE TRACT 'WWWWWWWWWWWWWWWWWW'
OPEN SPACE TRACT 'XXXXXXXXXXXXXXXXXX'
OPEN SPACE TRACT 'YYYYYYYYYYYYYYYYYY'
OPEN SPACE TRACT 'ZZZZZZZZZZZZZZZZZZ'
OPEN SPACE TRACT 'AAAAAAAAAAAAAAAAAAA'
OPEN SPACE TRACT 'BBBBBBBBBBBBBBBBBBB'
OPEN SPACE TRACT 'CCCCCCCCCCCCCCCCCCC'
OPEN SPACE TRACT 'DDDDDDDDDDDDDDDDDDD'
OPEN SPACE TRACT 'EEEEEEEEEEEEEEEEEEE'
OPEN SPACE TRACT 'FFFFFFFFFFFFFFFFFFF'
OPEN SPACE TRACT 'GGGGGGGGGGGGGGGGGGG'
OPEN SPACE TRACT 'HHHHHHHHHHHHHHHHHHH'
OPEN SPACE TRACT 'IIIIIIIIIIIIIIIIIII'
OPEN SPACE TRACT 'JJJJJJJJJJJJJJJJJJJ'
OPEN SPACE TRACT 'KKKKKKKKKKKKKKKKKKK'
OPEN SPACE TRACT 'LLLLLLLLLLLLLLLLLLL'
OPEN SPACE TRACT 'MMMMMMMMMMMMMMMMMMM'
OPEN SPACE TRACT 'NNNNNNNNNNNNNNNNNNN'
OPEN SPACE TRACT 'OOOOOOOOOOOOOOOOOOO'
OPEN SPACE TRACT 'PPPPPPPPPPPPPPPPPPP'
OPEN SPACE TRACT 'QQQQQQQQQQQQQQQQQQQ'
OPEN SPACE TRACT 'RRRRRRRRRRRRRRRRRRR'
OPEN SPACE TRACT 'SSSSSSSSSSSSSSSSSSS'
OPEN SPACE TRACT 'TTTTTTTTTTTTTTTTTTT'
OPEN SPACE TRACT 'UUUUUUUUUUUUUUUUUUU'
OPEN SPACE TRACT 'VVVVVVVVVVVVVVVVVVV'
OPEN SPACE TRACT 'WWWWWWWWWWWWWWWWWWW'
OPEN SPACE TRACT 'XXXXXXXXXXXXXXXXXXX'
OPEN SPACE TRACT 'YYYYYYYYYYYYYYYYYYY'
OPEN SPACE TRACT 'ZZZZZZZZZZZZZZZZZZZ'
OPEN SPACE TRACT 'AAAAAAAAAAAAAAAAAAAA'
OPEN SPACE TRACT 'BBBBBBBBBBBBBBBBBBBB'
OPEN SPACE TRACT 'CCCCCCCCCCCCCCCCCCCC'
OPEN SPACE TRACT 'DDDDDDDDDDDDDDDDDDDD'
OPEN SPACE TRACT 'EEEEEEEEEEEEEEEEEEEE'
OPEN SPACE TRACT 'FFFFFFFFFFFFFFFFFFFF'
OPEN SPACE TRACT 'GGGGGGGGGGGGGGGGGGGG'
OPEN SPACE TRACT 'HHHHHHHHHHHHHHHHHHHH'
OPEN SPACE TRACT 'IIIIIIIIIIIIIIIIIIII'
OPEN SPACE TRACT 'JJJJJJJJJJJJJJJJJJJJ'
OPEN SPACE TRACT 'KKKKKKKKKKKKKKKKKKKK'
OPEN SPACE TRACT 'LLLLLLLLLLLLLLLLLLLL'
OPEN SPACE TRACT 'MMMMMMMMMMMMMMMMMMMM'
OPEN SPACE TRACT 'NNNNNNNNNNNNNNNNNNNN'
OPEN SPACE TRACT 'OOOOOOOOOOOOOOOOOOOO'
OPEN SPACE TRACT 'PPPPPPPPPPPPPPPP

F:\12\12-0950-02\CAD\Final Plat\Landscape-Light-Sign.dwg, 20 LANDSCAPING - LIGHTING & SIGNAGE PLAN, 6/7/2022 2:24:58 PM, 1:1

LEGEND

- EXISTING WETLANDS BOUNDARY
- EXISTING ADJOINER LINE
- EXISTING BOUNDARY LINE
- EXISTING CENTERLINE
- PROPOSED CENTERLINE
- EXISTING EDGE OF CARTWAY
- PROPOSED EDGE OF PAVEMENT/CURB
- EXISTING RIGHT-OF-WAY LINE
- PROPOSED RIGHT-OF-WAY LINE
- PROPOSED LOT LINE
- EXISTING EASEMENT LINE
- PROPOSED EASEMENT LINE
- PROPOSED CLEAR SIGHT TRIANGLE (C.S.T.)
- EXISTING FENCE
- EXISTING GUIDE RAIL
- EXISTING RIPARIAN BARRIER
- PROPOSED FENCE
- PROPOSED GUIDE RAIL
- PROPOSED RIPARIAN BARRIER
- EXISTING SIGN
- PROPOSED SIGNS (SEE PLAN FOR DESIGNATION)
- EXISTING LOT MARKER
- BENCHMARK
- EXISTING VEGETATION (SHRUB TREE)
- PROPOSED STREET TREE (SEE PLAN & & CHART FOR QUANTITIES OF SPECIES)
- EXISTING TREELINE/BRUSHLINE
- PROPOSED TREELINE
- EXISTING UTILITY POLE W/ GUY WIRE
- EXISTING OVERHEAD ELECTRIC (OE)
- EXISTING UNDERGROUND ELECTRIC (UE)
- EXISTING ELECTRIC BOX (E)
- EXISTING LIGHT
- PROPOSED STREET LIGHT
- EXISTING WATERLINE (8"W)
- PROPOSED WATERLINE
- EXISTING WATER VALVE (W.V.)
- EXISTING FIRE HYDRANT
- PROPOSED FIRE HYDRANT
- EXISTING SANITARY SEWER MANHOLE (S)
- EXISTING GRAVITY SANITARY SEWER
- PROPOSED SANITARY SEWER MANHOLE
- PROPOSED SANITARY SEWER LINE
- EXISTING STORM PIPE (CMP)
- EXISTING STORM MANHOLE
- EXISTING STORM INLET
- EXISTING STORM HEADWALL/ENDWALL
- EXISTING GAS LINE (GAS)
- EXISTING GAS VALVE
- PROPOSED STORM PIPE
- PROPOSED STORM MANHOLE
- PROPOSED STORM INLET
- PROPOSED STORM HEADWALL/ENDWALL
- PROPOSED FLARED END SECTION
- PROPOSED PIPE OUTLET PROTECTION
- PROPOSED PAVED PATH/ CONCRETE SIDEWALK
- PEDESTRIAN CROSSWALK
- PROPOSED DRIVEWAY
- PROPOSED LOT NUMBER (100)
- ERNMX-127 SEEDING & SOIL AMENDMENT

SEE SHEET 19
MATCHLINE

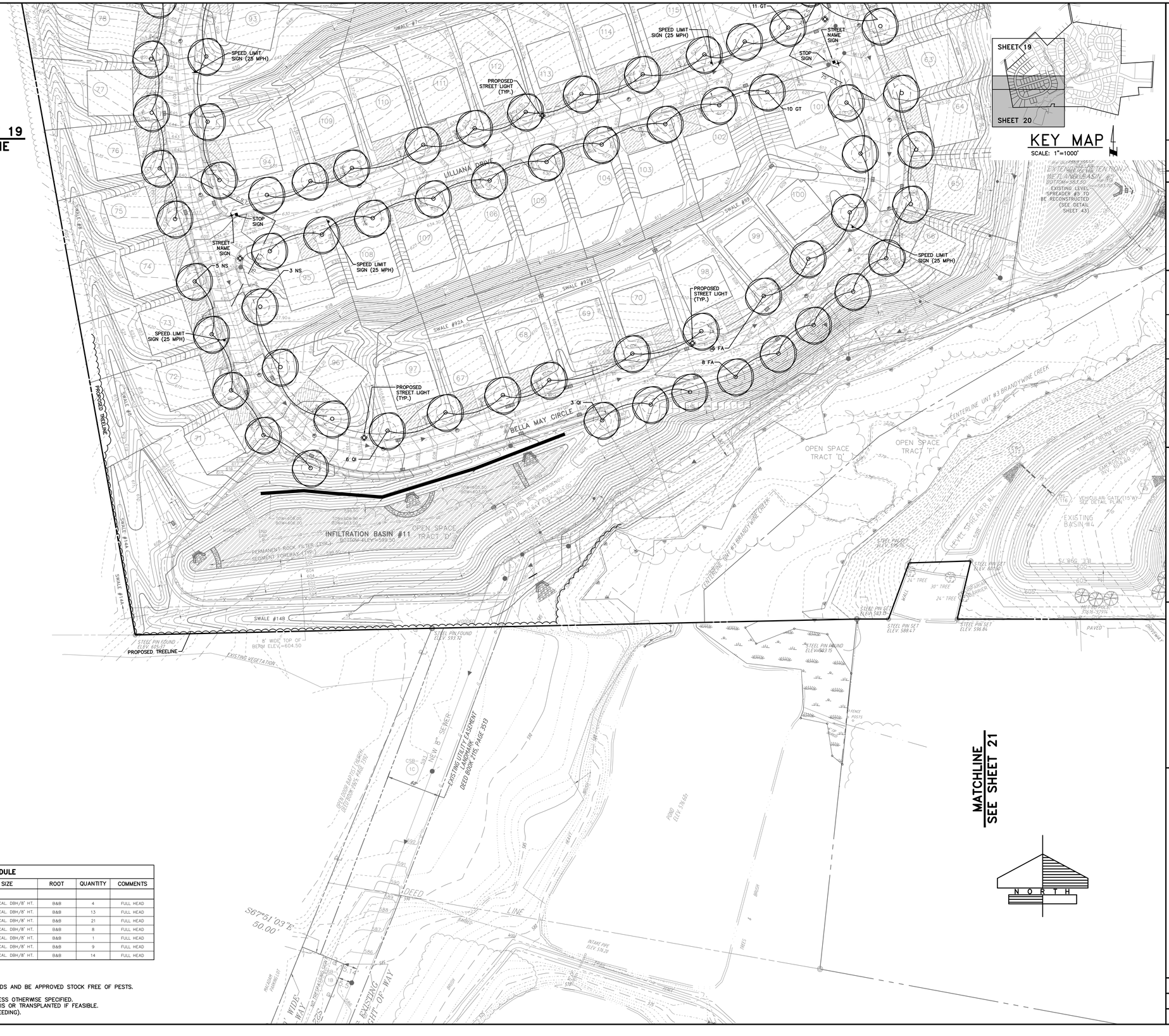

KEY MAP
SCALE: 1"=1000'

NOTES:

1. SEE SHEET 40 FOR PLANTING DETAILS.
2. WHERE NECESSARY FOR MAINTENANCE PURPOSES, PROVIDE GROUND COVER PLANTINGS ON SLOPES OF 2:1 OR GREATER. SEE SHEET 43 FOR GROUND COVER MIX (ERNMX-181 SEEDING) THAT CAN BE USED.

STREET TREE PLANTING SCHEDULE

SYMBOL	BOTANICAL NAME	COMMON NAME	MIN. SIZE	ROOT	QUANTITY	COMMENTS
		SHADE & STREET TREES				
AR	ACER RUBRUM "OCTOBER GLORY"	OCTOBER GLORY RED MAPLE	1-1/2" TO 2" CAL. DBH/8' HT.	B&B	4	FULL HEAD
FA	FRAXINUS AMERICANA "AUTUMN APPLAUSE"	AUTUMN APPLAUSE WHITE ASH	1-1/2" TO 2" CAL. DBH/8' HT.	B&B	13	FULL HEAD
GT	GLEDITSIA TRIACANTHOS INERMIS "SKYLINE"	SKYLINE HONEYLOCUST	1-1/2" TO 2" CAL. DBH/8' HT.	B&B	21	FULL HEAD
NS	NYSSA SYLVATICA	BLACK OR SOUR GUM	1-1/2" TO 2" CAL. DBH/8' HT.	B&B	8	FULL HEAD
QC	QUERCUS COCCINEA	SCARLET OAK	1-1/2" TO 2" CAL. DBH/8' HT.	B&B	1	FULL HEAD
QI	QUERCUS IMBRICARIA	SHINGLE OAK	1-1/2" TO 2" CAL. DBH/8' HT.	B&B	9	FULL HEAD
TC	TILIA CORDATA "GREENSPIRE"	GREENSPIRE LINDEN	1-1/2" TO 2" CAL. DBH/8' HT.	B&B	14	FULL HEAD

LANDSCAPE NOTES:

1. THIS PLANTING SCHEDULE REPRESENTS ALL PLANTINGS FOR PHASE 4.
2. ALL VARIETIES ARE TO BE USED, AS SPECIFIED, OR AN APPROVED EQUAL.
3. ALL PLANTING MATERIALS MUST BE REGIONAL AND NATIONAL NURSERY STANDARDS AND BE APPROVED STOCK FREE OF PESTS.
4. ALL TREES MUST BE STAKED AND GUYED, WHEN NECESSARY.
5. ALL PLANTING MOUNDS AND BEDS SHALL BE MULCHED TO A DEPTH OF 4", UNLESS OTHERWISE SPECIFIED.
6. ALL EXISTING VEGETATION IS TO BE EVALUATED AND IS TO BE EITHER KEPT AS IS OR TRANSPLANTED IF FEASIBLE.
7. SEE SHEET 43 FOR SEED MIX TO BE UTILIZED WITHIN THE BASIN (ERNMX-127 SEEDING).

NO.	DATE	REVISION
2	4-25-22	REVISED PER MLT, LEB. CO. ENGINEER & CITY OF LEB. AUTHORITY
1	2-1-22	REVISED PER MLT, LEB. CO. ENGINEER, LCPD, NLTMA, & CITY OF LEB. AUTHORITY

FOR PIONEER MANAGEMENT BY:

FIELDBOOK NO.: VALUE
SURV. CHIEF: RC
DRAWN BY: RC
CHKD BY: RC

MANAGER: JAMES C. HENKE
DESIGN BY: JDB/KWG
CHKD BY: JDB/JCH

DRAWING REFERENCE: C:\12\12-0950-02\CAD\Final Plat\Landscape-Light-Sign.dwg

XREFS:
TB: [F:\12\12-0950-02\CAD\Final Plat\Lot-Lines-TB.dwg]
Plat-1: [F:\12\12-0950-02\CAD\Final Plat\Lot-Lines-Plat-1.dwg]
Plat-2&3: [F:\12\12-0950-02\CAD\Final Plat\Lot-Lines-Plat-2&3.dwg]
Plat-4&5: [F:\12\12-0950-02\CAD\Final Plat\Lot-Lines-Plat-4&5.dwg]
Xrefs: [F:\12\12-0950-02\CAD\Utilities\Utility-Layout-Xref.dwg], Roads (Street Alignments-Blacktop)
Xrefs: [F:\12\12-0950-02\CAD\Utilities\Utility-Layout-Xref.dwg], Roads (Curb)
F:\12\12-0950-02\CAD\Utilities\Utility-Layout-Xref.dwg, Roads (Sidewalk)

CLIENT
LANDMARK HOMES AT SWEETBRIAR
c/o MR. CLIFF WEAVER
1737 WEST MAIN STREET
EPHRATA, PA 17522
(717) 733-1536

SCALE
1" = 50'
0 25' 50' 100' 150'

PIONEER Management, LLC
711 Millersville Road, Lancaster, PA 17603
Phone: 717-481-4955 Fax: 717-481-4955
Email: JP@pioneermanagementllc.com
Website: www.pioneermanagementllc.com

LANDSCAPING, LIGHTING & SIGNAGE PLAN
FINAL PHASE 4 & REVISED FINAL PHASE 3 SUBDIVISION PLAN
FOR
THE CROSSINGS AT SWEET BRIAR
NORTH LEBANON TOWNSHIP LEBANON COUNTY, PA.

DATE: JUNE 25, 2021
SHEET NO. 20 OF 43
DWG. NO. 12-0950-02-F

F:\12\12-0950-02\CAD\Final-Ph4\Grading-Overall.dwg, 21 OVERALL GRADING PLAN, 6/7/2022 2:25:10 PM, 1:1


KIMMERLINGS ROAD (T-805)
KIMMERLINGS ROAD (T-805)
MARION DRIVE
NORTH
BELLA MAY CIRCLE
SWEETBRIAR LANE
GOLDEN COURT
SWEETBRIAR CIRCLE
SWEETBRIAR CIRCLE
SWEETBRIAR CIRCLE

F:\2021\2099-05\CAD\Plan Prep\Grading.dwg, 2/1/2022 2:25:37 PM, kb



LEGEND

- EXISTING WETLANDS BOUNDARY
- EXISTING STREAM CENTERLINE
- EXISTING ADJOINER LINE
- EXISTING BOUNDARY LINE
- EXISTING CENTERLINE
- PROPOSED CENTERLINE
- EXISTING EDGE OF CARTWAY
- PROPOSED EDGE OF PAVEMENT/CURB
- EXISTING RIGHT-OF-WAY LINE
- PROPOSED RIGHT-OF-WAY LINE
- PROPOSED LOT LINE
- EXISTING EASEMENT LINE
- PROPOSED EASEMENT LINE
- EXISTING FENCE
- EXISTING GUIDE RAIL
- EXISTING RIPARIAN BARRIER
- PROPOSED FENCE
- PROPOSED GUIDE RAIL
- PROPOSED RIPARIAN BARRIER
- EXISTING SIGN
- BENCHMARK
- EXISTING VEGETATION (SHRUB, TREE)
- EXISTING TREELINE/BRUSHLINE
- PROPOSED TREELINE
- EXISTING CONTOUR LINE (630)
- PROPOSED CONTOUR LINE (630)
- PROPOSED SPOT ELEVATION (+ 630.25)
- PROPOSED FINISHED FLOOR ELEVATION (FFE=630.70)
- PROPOSED GARAGE FINISHED FLOOR ELEVATION (GFE=630.20)
- PROPOSED BASEMENT FINISHED FLOOR ELEVATION (BFE=621.70)
- EXISTING UTILITY POLE W/ GUY WIRE
- EXISTING OVERHEAD ELECTRIC (OE)
- EXISTING UNDERGROUND ELECTRIC (UE)
- EXISTING ELECTRIC BOX (E)
- EXISTING LIGHT
- PROPOSED STREET LIGHT
- EXISTING WATERLINE (W)
- PROPOSED WATERLINE (8"W)
- EXISTING WATER VALVE (WV)
- PROPOSED WATER VALVE
- EXISTING FIRE HYDRANT
- PROPOSED FIRE HYDRANT
- EXISTING SANITARY SEWER MANHOLE (S)
- PROPOSED SANITARY SEWER MANHOLE
- PROPOSED SANITARY SEWER MANHOLE LABEL (CSB 14)
- EXISTING GRAVITY SANITARY SEWER
- PROPOSED SANITARY SEWER LINE
- EXISTING STORM PIPE
- PROPOSED STORM PIPE
- EXISTING STORM MANHOLE
- PROPOSED STORM MANHOLE
- EXISTING STORM INLET
- PROPOSED STORM INLET
- EXISTING STORM HEADWALL/ENDWALL
- PROPOSED STORM HEADWALL/ENDWALL
- PROPOSED FLARED END SECTION
- PROPOSED STORM STRUCTURE LABEL (I-9 INLET, EW-3 ENDWALL/HEADWALL, MH-4 STORM MANHOLE, ES-5 FLARED END SECTION)
- PROPOSED PIPE OUTLET PROTECTION
- EXISTING GAS LINE (G)
- EXISTING GAS VALVE (GV)
- PROPOSED PAVED PATH
- PROPOSED CONCRETE SIDEWALK
- PROPOSED DRIVEWAY
- PROPOSED LOT NUMBER (100)
- EXISTING AS-BUILT ELEVATIONS (*Top of Curb Elev. (TC)=646.97, Bottom of Curb Elev. (BC)=646.37, Centerline Elev. (CL)=646.74*)
- EXISTING RETAINING WALL TEST PIT LOCATION (TP-1)

NO.	DATE	REVISION
2	4-25-22	REVISED PER NLT, LEB. CO. ENGINEER & CITY OF LEB. AUTHORITY
1	2-1-22	REVISED PER NLT, LEB. CO. ENGINEER, LCPD, NLTMA, & CITY OF LEB. AUTHORITY

FOR PIONEER MANAGEMENT BY:

FIELDBOOK NO.: VALUE
SURV. CHIEF: RC
CHKD BY: RC
DRAWN BY: RC
CHKD BY: JDB/JCH
DESIGN BY: JDB/KWG
MANAGER: JAMES C. HENKE

DRAWING REFERENCE: F:\2021\2099-05\CAD\Plan Prep\Grading.dwg

XREFS:
TB: [F:\2021\2099-05\CAD\Plan Prep\LC-xref-TB.dwg]
Pre-Base: [F:\2021\2099-05\CAD\Plan Prep\LC-xref-Pre-Base.dwg]
Pre-Base: [F:\2021\2099-05\CAD\Plan Prep\LC-xref-Pre-Base-Block.dwg]
Alignment: [F:\2021\2099-05\CAD\Plan Prep\LC-xref-Alignment.dwg]
Street Base: [F:\2021\2099-05\CAD\Plan Prep\LC-xref-STREET-BASE.dwg]
Alignment-Base: [F:\2021\2099-05\CAD\Plan Prep\LC-xref-Alignment-Base.dwg]
Alignment-Base-Block: [F:\2021\2099-05\CAD\Plan Prep\LC-xref-Alignment-Base-Block.dwg]

CLIENT
LANDMARK HOMES AT SWEETBRIAR
c/o MR. CLIFF WEAVER
1737 WEST MAIN STREET
EPHRATA, PA 17522
(717) 733-1536

SCALE
1" = 50'
0 25' 50' 100' 150'

PIONEER Management, LLC
111 Millersville Road, Lancaster, PA 17603
Phone: (717) 481-4955 Fax: (717) 481-4955
Email: JKB@pioneermanagementllc.com
Website: www.pioneermanagementllc.com

GRADING PLAN
FINAL PHASE 4 & REVISED FINAL PHASE 3 SUBDIVISION PLAN
FOR
THE CROSSINGS AT SWEET BRIAR
NORTH LEBANON TOWNSHIP, LEBANON COUNTY, PA.

DATE: JUNE 25, 2021
SHEET NO. 22 OF 43
DWG. NO. 12-0950-02-F

SEE SHEET 22
MATCHLINE

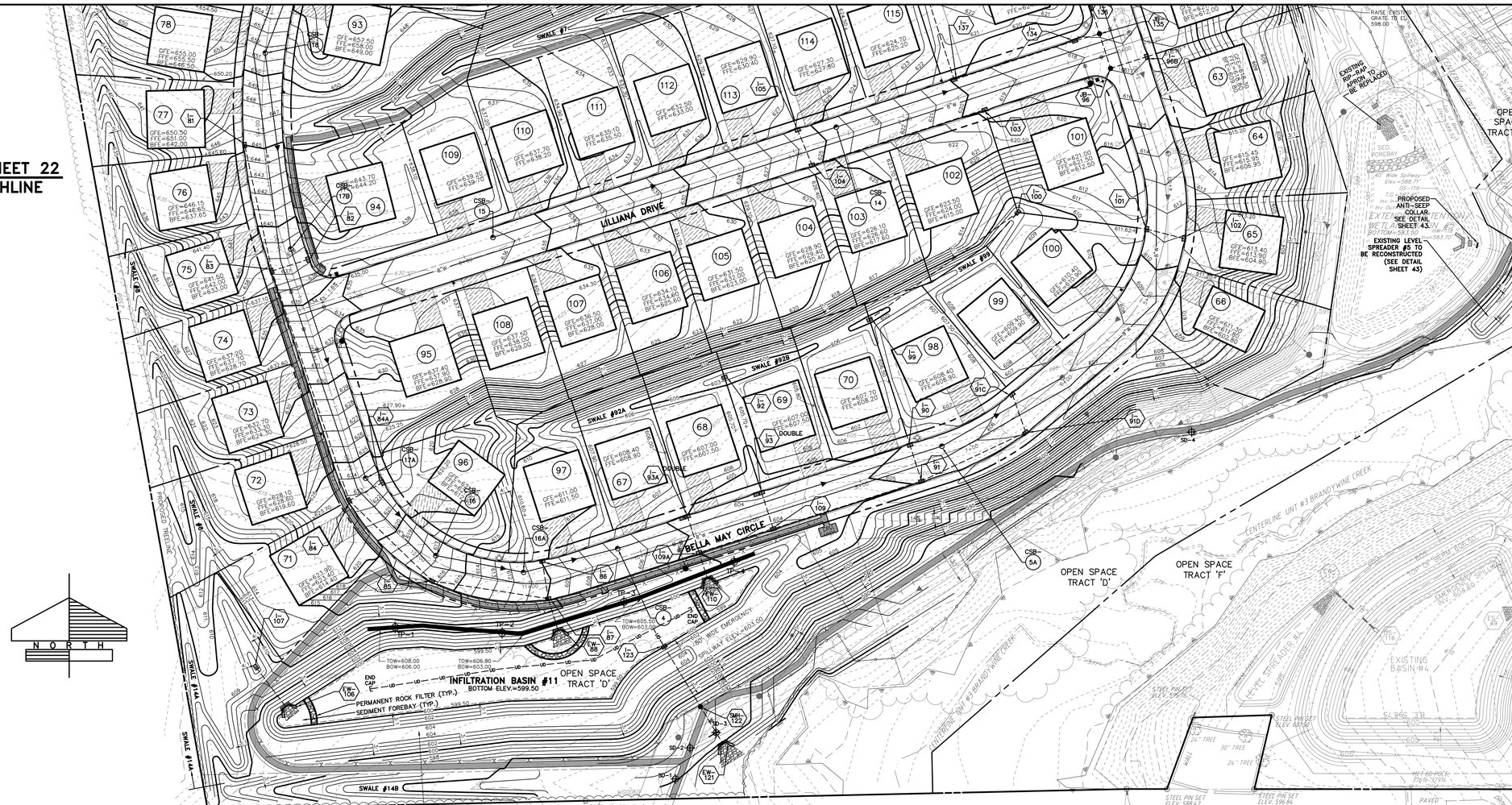

MATCHLINE
SEE SHEET 24

LEGEND

- EXISTING WETLANDS BOUNDARY
- EXISTING STREAM CENTERLINE
- EXISTING ADJOINER LINE
- EXISTING BOUNDARY LINE
- EXISTING CENTERLINE
- PROPOSED CENTERLINE
- EXISTING EDGE OF CARTWAY
- PROPOSED EDGE OF PAVEMENT/CURB
- EXISTING RIGHT-OF-WAY LINE
- PROPOSED RIGHT-OF-WAY LINE
- PROPOSED LOT LINE
- EXISTING EASEMENT LINE
- PROPOSED EASEMENT LINE
- EXISTING FENCE
- EXISTING GUIDE RAIL
- EXISTING RIPARIAN BARRIER
- PROPOSED FENCE
- PROPOSED GUIDE RAIL
- PROPOSED RIPARIAN BARRIER
- EXISTING SIGN
- BENCHMARK
- EXISTING VEGETATION — SHRUB TREE
- EXISTING TREELINE/BRUSHLINE
- PROPOSED TREELINE
- EXISTING CONTOUR LINE — 630
- PROPOSED CONTOUR LINE — 630
- PROPOSED SPOT ELEVATION — + 630.25
- PROPOSED FINISHED FLOOR ELEVATION — FFE=630.70
- PROPOSED GARAGE FINISHED FLOOR ELEVATION — GFE=630.20
- PROPOSED BASEMENT FINISHED FLOOR ELEVATION — BFE=621.70
- EXISTING UTILITY POLE W/ GUY WIRE
- EXISTING OVERHEAD ELECTRIC — OE
- EXISTING UNDERGROUND ELECTRIC — UE
- EXISTING ELECTRIC BOX — E
- EXISTING LIGHT
- PROPOSED STREET LIGHT
- EXISTING WATERLINE — W
- PROPOSED WATERLINE — 8"WL
- EXISTING WATER VALVE — WV
- PROPOSED WATER VALVE
- EXISTING FIRE HYDRANT
- PROPOSED FIRE HYDRANT
- EXISTING SANITARY SEWER MANHOLE
- PROPOSED SANITARY SEWER MANHOLE
- PROPOSED SANITARY SEWER MANHOLE LABEL — CSB 14
- EXISTING GRAVITY SANITARY SEWER — S
- PROPOSED SANITARY SEWER LINE
- EXISTING STORM PIPE
- PROPOSED STORM PIPE
- EXISTING STORM MANHOLE
- PROPOSED STORM MANHOLE
- EXISTING STORM INLET
- PROPOSED STORM INLET
- EXISTING STORM HEADWALL/ENDWALL
- PROPOSED STORM HEADWALL/ENDWALL
- PROPOSED FLARED END SECTION
- PROPOSED STORM STRUCTURE LABEL — I-9 INLET; EW-3 ENDWALL/HEADWALL; MH-4 STORM MANHOLE; ES-5 FLARED END SECTION
- PROPOSED PIPE OUTLET PROTECTION — 12"
- EXISTING GAS LINE — G
- EXISTING GAS VALVE — GV
- PROPOSED PAVED PATH
- PROPOSED CONCRETE SIDEWALK
- PROPOSED DRIVEWAY
- PROPOSED LOT NUMBER — 100
- EXISTING AS-BUILT ELEVATIONS — *Top of Curb Elev. (TC)=646.97; Bottom of Curb Elev. (BC)=646.37; Centerline Elev. (CL)=646.74*
- EXISTING RETAINING WALL TEST PIT LOCATION — TP-1

SOILS LEGEND

	HYDROLOGIC SOIL GROUP
BeA – BEDINGTON SHALY SILT LOAM, 0–3% SLOPES	B
BeB – BEDINGTON SHALY SILT LOAM, 3–8% SLOPES	B
BkB – BERKS SHALY SILT LOAM, 3–8% SLOPES	C
BkC – BERKS SHALY SILT LOAM, 8–15% SLOPES	C
CmB – COMLY SILT LOAM, ROCKY, 3–8% SLOPES	C

SOIL BOUNDARY

SOIL DESCRIPTION LABEL **BkB**

NOTES RELATED TO CROSSINGS OF THE EXISTING UGI GAS LINE:

1. AT ALL LOCATIONS WHERE THE PROPOSED TRAIL CROSSES THE EXISTING GAS LINE, THE GAS LINE SHALL BE PROTECTED IN PLACE DURING EXCAVATION OF THE SUBBASE.
2. THE PROPOSED FENCE (RIPARIAN BARRIER) POSTS SHALL BE SPACED SO THAT THE EXISTING GAS LINE IS CENTERED BETWEEN THE NEAREST POSTS AND THE FENCE SHALL BE INSTALLED AS CLOSE TO PERPENDICULAR AS POSSIBLE TO THE GAS LINE.

UGI GAS LINE SOFT DIG INFORMATION:

- SD-1 — EX. GRADE ELEV.=±589.10, TOP OF PIPE ELEV.=±586.50
- SD-2 — EX. GRADE ELEV.=±590.17, TOP OF PIPE ELEV.=±586.86
- SD-3 — EX. GRADE ELEV.=±589.35, TOP OF PIPE ELEV.=±585.79
- SD-4 — EX. GRADE ELEV.=±586.88, TOP OF PIPE ELEV.=±582.85

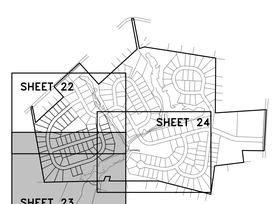

KEY MAP
SCALE: 1"=1000'

NO.	DATE	REVISION
2	4-25-22	REVISED PER NLT, LEB. CO. ENGINEER & CITY OF LEB. AUTHORITY
1	2-1-22	REVISED PER NLT, LEB. CO. ENGINEER, LCPD, NLTMA, & CITY OF LEB. AUTHORITY

FOR PIONEER MANAGEMENT BY:

MANAGER: JAMES C. HENKE
SURV. CHIEF: RC
FIELDBOOK NO.: VALUE
DESIGN BY: JDB/KWG
CHKD BY: JDB/JCH
DRAWN BY: RC
CHKD BY: RC
DRAWING REFERENCE: C:\CIVIL12-0950-02\CAD\Final-Plat\Grading.dwg
XREFS:

CLIENT
LANDMARK HOMES AT SWEETBRIAR
c/o MR. CLIFF WEAVER
1737 WEST MAIN STREET
EPHRATA, PA 17522
(717) 733-1536

SCALE: 1" = 50' (0, 25', 50', 100', 150')

PIONEER
Management, LLC
111 Millersville Road, Lancaster, PA 17603
Phone: (717) 481-4500 Fax: (717) 481-4955
Email: jhp@pioneermanagementllc.com
Website: www.pioneermanagementllc.com

GRADING PLAN
FINAL PHASE 4 & REVISED FINAL PHASE 3 SUBDIVISION PLAN
FOR
THE CROSSINGS AT SWEET BRIAR
NORTH LEBANON TOWNSHIP LEBANON COUNTY, PA.

DATE: JUNE 25, 2021
SHEET NO. 23 OF 43
DWG. NO. 12-0950-02-F

F:\2021\2099-02\CAD\Final Plat\Grading.dwg, 24 LANDSCAPE PLAN, 6/7/2022 2:25:31 PM, 1:1

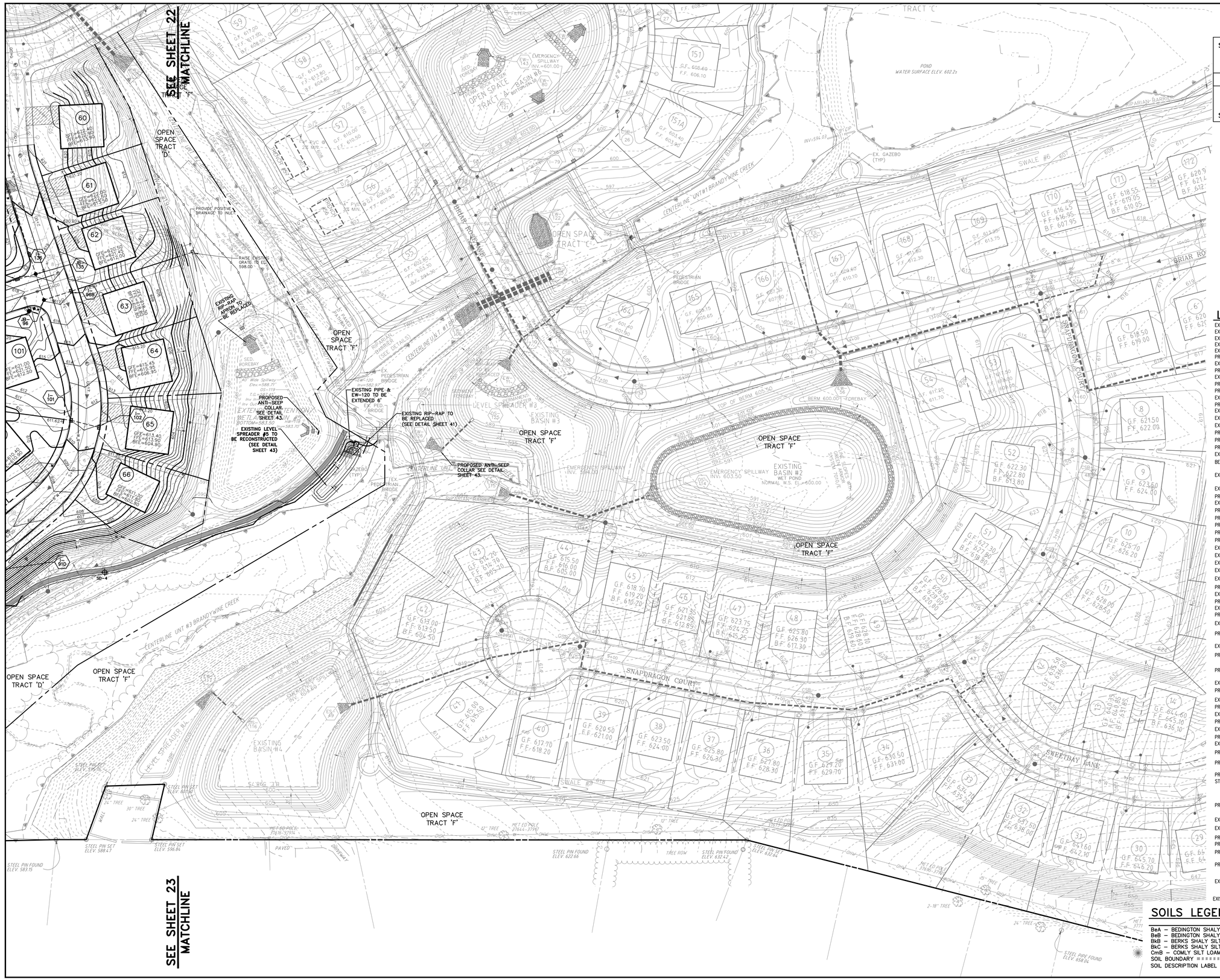

LEGEND

- EXISTING WETLANDS BOUNDARY
- EXISTING STREAM CENTERLINE
- EXISTING ADJOINER LINE
- EXISTING BOUNDARY LINE
- EXISTING CENTERLINE
- PROPOSED CENTERLINE
- EXISTING EDGE OF CARTWAY
- PROPOSED EDGE OF PAVEMENT/CURB
- EXISTING RIGHT-OF-WAY LINE
- PROPOSED RIGHT-OF-WAY LINE
- PROPOSED LOT LINE
- EXISTING EASEMENT LINE
- PROPOSED EASEMENT LINE
- EXISTING FENCE
- EXISTING GUIDE RAIL
- EXISTING RIPARIAN BARRIER
- PROPOSED FENCE
- PROPOSED GUIDE RAIL
- PROPOSED RIPARIAN BARRIER
- EXISTING SIGN
- BENCHMARK
- EXISTING VEGETATION — SHRUB TREE
- EXISTING TREELINE/BRUSHLINE
- PROPOSED TREELINE
- EXISTING CONTOUR LINE — 630
- PROPOSED CONTOUR LINE — 630
- PROPOSED SPOT ELEVATION — + 630.25
- PROPOSED FINISHED FLOOR ELEVATION — FFE=630.70
- PROPOSED GARAGE FINISHED FLOOR ELEVATION — GFE=630.20
- PROPOSED BASEMENT FINISHED FLOOR ELEVATION — BFE=621.70
- EXISTING UTILITY POLE W/ GUY WIRE
- EXISTING OVERHEAD ELECTRIC — OE
- EXISTING UNDERGROUND ELECTRIC — UE
- EXISTING ELECTRIC BOX — E
- EXISTING LIGHT
- PROPOSED STREET LIGHT
- EXISTING WATERLINE — W
- PROPOSED WATERLINE — 8"W
- EXISTING WATER VALVE — WV
- PROPOSED WATER VALVE
- EXISTING FIRE HYDRANT
- PROPOSED FIRE HYDRANT
- EXISTING SANITARY SEWER MANHOLE — S
- PROPOSED SANITARY SEWER MANHOLE — CSB
- PROPOSED SANITARY SEWER MANHOLE LABEL — 14
- EXISTING GRAVITY SANITARY SEWER
- PROPOSED SANITARY SEWER LINE
- EXISTING STORM PIPE
- PROPOSED STORM PIPE
- EXISTING STORM MANHOLE
- PROPOSED STORM MANHOLE
- EXISTING STORM INLET
- PROPOSED STORM INLET
- EXISTING STORM HEADWALL/ENDWALL
- PROPOSED STORM HEADWALL/ENDWALL
- PROPOSED FLARED END SECTION
- PROPOSED STORM STRUCTURE LABEL — I-9 INLET; EW-3 ENDWALL/ HEADWALL; MH-4 STORM MANHOLE; ES-5 FLARED END SECTION
- PROPOSED PIPE OUTLET PROTECTION
- EXISTING GAS LINE — G
- EXISTING GAS VALVE — GV
- PROPOSED PAVED PATH
- PROPOSED CONCRETE SIDEWALK
- PROPOSED DRIVEWAY
- PROPOSED LOT NUMBER — 100
- EXISTING AS-BUILT ELEVATIONS — Top of Curb Elev. (TC)=646.97; Bottom of Curb Elev. (BC)=646.37; Centerline Elev. (CL)=646.74
- EXISTING RETAINING WALL TEST PIT LOCATION — TP-1

SOILS LEGEND

	HYDROLOGIC SOIL GROUP
BeA – BEDINGTON SHALY SILT LOAM, 0–3% SLOPES	B
BeB – BEDINGTON SHALY SILT LOAM, 3–8% SLOPES	B
BkB – BERKS SHALY SILT LOAM, 3–8% SLOPES	C
BkC – BERKS SHALY SILT LOAM, 8–15% SLOPES	C
CmB – COMLY SILT LOAM, ROCKY, 3–8% SLOPES	C

SOIL BOUNDARY

SOIL DESCRIPTION LABEL **BkB**

NO.	DATE	REVISION
2	4-25-22	REVISED PER MLT, LEB. CO. ENGINEER & CITY OF LEB. AUTHORITY
1	2-1-22	REVISED PER MLT, LEB. CO. ENGINEER, LCPD, NLTMA, & CITY OF LEB. AUTHORITY

FOR PIONEER MANAGEMENT BY:

FIELDBOOK NO. VALUE

SURV. CHIEF: RC

DRAWN BY: RC

CHKD BY: RC

DRAWING REFERENCE: F:\2021\2099-02\CAD\Final Plat\Grading.dwg

XREFS:
TB (F:\2021\2099-02\CAD\Final Plat\Lot Lines\TB.dwg)
Property Lines (F:\2021\2099-02\CAD\Final Plat\Lot Lines\Property Lines Base.dwg)
Pin Base (F:\2021\2099-02\CAD\Final Plat\Lot Lines\Pin Base.dwg)
Proposed Lot Lines (F:\2021\2099-02\CAD\Final Plat\Lot Lines\Proposed Lot Lines Base.dwg)
Street Names (F:\2021\2099-02\CAD\Final Plat\Lot Lines\Street Names Base.dwg)
Alignments (F:\2021\2099-02\CAD\Final Plat\Alignments\Alignments-Base.dwg)
Alignment Labels (F:\2021\2099-02\CAD\Final Plat\Alignments\Alignment Labels-Base.dwg)
Pin Labels (F:\2021\2099-02\CAD\Final Plat\Lot Lines\Pin Labels Base.dwg)

MANAGER: JAMES C. HENKE

DESIGN BY: JDB/KWG

CHKD BY: JDB/JCH

CLIENT
LANDMARK HOMES AT SWEETBRIAR
c/o MR. CLIFF WEAVER
1737 WEST MAIN STREET
EPHRATA, PA 17522
(717) 733-1536

SCALE 1" = 50'
0 25' 50' 100' 150'

PIONEER
Management, LLC
711 Millersville Road, Lancaster, PA 17603
Phone: 717.481.4955 Fax: 717.481.4955
Email: jh@pioneermanagementllc.com
Website: www.pioneermanagementllc.com

GRADING PLAN
FINAL PHASE 4 & REVISED FINAL PHASE 3 SUBDIVISION PLAN
FOR
THE CROSSINGS AT SWEET BRIAR
NORTH LEBANON TOWNSHIP LEBANON COUNTY, PA.

DATE: JUNE 25, 2021

SHEET NO. 24 OF 43

DWG. NO. 12-0950-02-F

F:\12\12-0950-02\CAD\Final Plan\Utility.dwg, 25 UTILITY PLAN, 6/7/2022 2:25:56 PM, 1:1

NOTE

1. ALL WATER SERVICE CONNECTIONS ARE TO BE INSULATED AT CROSSINGS OF STORM SEWER.

N O R T H

KEY MAP
SCALE: 1"=1000'
SHEET 25
SHEET 27
SHEET 26

LEGEND

- EXISTING WETLANDS BOUNDARY
- EXISTING STREAM CENTERLINE
- EXISTING ADJOINER LINE
- EXISTING BOUNDARY LINE
- EXISTING CENTERLINE
- PROPOSED CENTERLINE
- EXISTING EDGE OF CARTWAY
- PROPOSED EDGE OF PAVEMENT/CURB
- EXISTING RIGHT-OF-WAY LINE
- PROPOSED RIGHT-OF-WAY LINE
- PROPOSED LOT LINE
- EXISTING EASEMENT LINE
- PROPOSED EASEMENT LINE
- EXISTING FENCE
- EXISTING GUIDE RAIL
- EXISTING RIPARIAN BARRIER
- PROPOSED FENCE
- PROPOSED GUIDE RAIL
- PROPOSED RIPARIAN BARRIER
- EXISTING SIGN
- EXISTING LOT MARKER
- BENCHMARK
- EXISTING VEGETATION
- SHRUB TREE
- PROPOSED STREET TREE
- EXISTING TREELINE/BRUSHLINE
- PROPOSED TREELINE
- EXISTING UTILITY POLE W/ GUY WIRE
- EXISTING OVERHEAD ELECTRIC
- EXISTING UNDERGROUND ELECTRIC
- EXISTING ELECTRIC BOX
- EXISTING LIGHT
- PROPOSED STREET LIGHT
- EXISTING WATERLINE
- PROPOSED WATERLINE
- EXISTING WATER VALVE
- PROPOSED WATER VALVE
- EXISTING FIRE HYDRANT
- PROPOSED FIRE HYDRANT
- EXISTING SANITARY SEWER MANHOLE
- PROPOSED SANITARY SEWER MANHOLE
- PROPOSED SANITARY SEWER MANHOLE LABEL (MH 40)
- EXISTING GRAVITY SANITARY SEWER
- PROPOSED SANITARY SEWER LINE
- EXISTING STORM PIPE
- PROPOSED STORM PIPE
- PROPOSED PAVEMENT BASE DRAIN
- EXISTING STORM MANHOLE
- PROPOSED STORM MANHOLE
- EXISTING STORM INLET
- PROPOSED STORM INLET
- EXISTING STORM HEADWALL/ENDWALL
- PROPOSED STORM HEADWALL/ENDWALL
- PROPOSED FLARED END SECTION
- PROPOSED STORM STRUCTURE LABEL (I-9 INLET; EW-3 ENDWALL/HEADWALL; MH-4 STORM MANHOLE; ES-5 FLARED END SECTION)
- PROPOSED PIPE OUTLET PROTECTION
- EXISTING GAS LINE
- EXISTING GAS VALVE
- PROPOSED PAVED PATH
- PROPOSED CONCRETE SIDEWALK
- PROPOSED DRIVEWAY
- PROPOSED LOT NUMBER (100)

KIMMERLINGS ROAD (T-805)
MARCON DRIVE
BRIAR ROSE AVE
BELLA MAY CIRCLE
LILLIANA DRIVE
CIRCLE
ORCHARD
BELLA MAY CIRCLE
OPEN SPACE TRACT 'B'
OPEN SPACE TRACT 'E'
OPEN SPACE TRACT 'F'
OPEN SPACE TRACT 'D'
SWALE #21
SWALE #22
CENTERLINE UNIT #2 BRANDYWINE CREEK
RIPARIAN BARRIER (SEE DETAILS)
PATH EASEMENT
DRAINAGE EASEMENT
SANITARY SEWER EASEMENT
PRIVATE UTILITY ACCESS EASEMENT
CONSERVATION EASEMENT
TEMP. SWALE 'A' (TO BE REMOVED)
TEMP. SWALE 'B' (TO BE REMOVED)
40' Wide Spillway Elev.=588.71' OS=.115 T.C.=587.45' Inv. In=583.65' Inv. Out=581.35'
HW-118 Inv=583.70'

CONNECT PROPOSED LATERALS TO PHASE 2 SANITARY SEWER IN ACCORDANCE WITH NORTH LEBANON TOWNSHIP MUNICIPAL AUTHORITY SPECIFICATIONS.

CONNECT TO PHASE 2 SANITARY SEWER IN ACCORDANCE WITH NORTH LEBANON TOWNSHIP MUNICIPAL AUTHORITY SPECIFICATIONS.

CONNECT TO PHASE 2 WATERLINE IN ACCORDANCE WITH CITY OF LEBANON AUTHORITY SPECIFICATIONS.

REMOVE EXISTING BLOW-OFF VALVE & CONNECT TO PHASE 2 WATERLINE IN ACCORDANCE WITH CITY OF LEBANON AUTHORITY SPECIFICATIONS.

EXISTING EW-96 & RIP-RAP TO BE REMOVED & EXISTING PIPE TO BE EXTENDED TO I-136

CONNECT TO PHASE 2 SANITARY SEWER IN ACCORDANCE WITH NORTH LEBANON TOWNSHIP MUNICIPAL AUTHORITY SPECIFICATIONS.

20' CONCRETE ENCASE LATERAL

1" AIR REALEASE VALVE

11.25° BEND
22.5° BEND
45° BEND

MATCHLINE
SEE SHEET 26

MATCHLINE
SEE SHEET 27

NO.	DATE	REVISION
2	4-25-22	REVISED PER NLT, LEB. CO. ENGINEER & CITY OF LEB. AUTHORITY
1	2-1-22	REVISED PER NLT, LEB. CO. ENGINEER, LCPD, NLTMA, & CITY OF LEB. AUTHORITY

FOR PIONEER MANAGEMENT BY:

MANAGER: JAMES C. HENKE
SURV. CHIEF: RC
FIELDBOOK NO. VALUE
DESIGN BY: JDB/KWG
CHKD BY: JDB/JCH
DRAWN BY: RC
CHKD BY: RC
DRAWING REFERENCE: F:\12\12-0950-02\CAD\Final Plan\Utility.dwg
XREFS:
TB (F:\12\12-0950-02\CAD\Final Plan\Lot Line Table.dwg)
Plan Base (F:\12\12-0950-02\CAD\Final Plan\Plan Base.dwg)
Profile Base (F:\12\12-0950-02\CAD\Final Plan\Profile Base.dwg)
Sheet Index (F:\12\12-0950-02\CAD\Final Plan\A1(24) Sheet Index.dwg)
Title Block (F:\12\12-0950-02\CAD\Final Plan\A1(24) Title Block.dwg)
Alignment (F:\12\12-0950-02\CAD\Final Plan\A1(24) Alignment-Base.dwg)
Alignment (F:\12\12-0950-02\CAD\Final Plan\A1(24) Alignment-Match.dwg)

CLIENT
LANDMARK HOMES AT SWEETBRIAR
c/o MR. CLIFF WEAVER
1737 WEST MAIN STREET
EPHRATA, PA 17522
(717) 733-1536

SCALE
1" = 50'
0 25' 50' 100' 150'

PIONEER Management, LLC
111 Millersville Road, Lancaster, PA 17603
Phone: (717) 435-8300 Fax: (717) 481-4655
Email: jh@pioneermanagementllc.com
Website: www.pioneermanagementllc.com

UTILITY PLAN
FINAL PHASE 4 & REVISED FINAL PHASE 3 SUBDIVISION PLAN
FOR
THE CROSSINGS AT SWEET BRIAR
NORTH LEBANON TOWNSHIP LEBANON COUNTY, PA.

DATE: JUNE 25, 2021
SHEET NO. 25 OF 43
DWG. NO. 12-0950-02-F

F:\12\12-0950-02\CAD\Final Plan\Utility.dwg, 26 UTILITY PLAN, 6/7/2022 2:25:55 PM, 1:1

SEE SHEET 25
MATCHLINE

NOTE

1. ALL WATER SERVICE CONNECTIONS ARE TO BE INSULATED AT CROSSINGS OF STORM SEWER.

LEGEND

- EXISTING WETLANDS BOUNDARY
- EXISTING STREAM CENTERLINE
- EXISTING ADJOINER LINE
- EXISTING BOUNDARY LINE
- EXISTING CENTERLINE
- PROPOSED CENTERLINE
- EXISTING EDGE OF CARTWAY
- PROPOSED EDGE OF PAVEMENT/CURB
- EXISTING RIGHT-OF-WAY LINE
- PROPOSED RIGHT-OF-WAY LINE
- PROPOSED LOT LINE
- EXISTING EASEMENT LINE
- PROPOSED EASEMENT LINE
- EXISTING FENCE
- EXISTING GUIDE RAIL
- EXISTING RIPARIAN BARRIER
- PROPOSED FENCE
- PROPOSED GUIDE RAIL
- PROPOSED RIPARIAN BARRIER
- EXISTING SIGN
- EXISTING LOT MARKER
- BENCHMARK
- EXISTING VEGETATION (SHRUB TREE)
- PROPOSED STREET TREE
- EXISTING TREELINE/BRUSHLINE
- PROPOSED TREELINE
- EXISTING UTILITY POLE W/ GUY WIRE
- EXISTING OVERHEAD ELECTRIC
- EXISTING UNDERGROUND ELECTRIC
- EXISTING ELECTRIC BOX
- EXISTING LIGHT
- PROPOSED STREET LIGHT
- EXISTING WATERLINE
- PROPOSED WATERLINE
- EXISTING WATER VALVE
- PROPOSED WATER VALVE
- EXISTING FIRE HYDRANT
- PROPOSED FIRE HYDRANT
- EXISTING SANITARY SEWER MANHOLE
- PROPOSED SANITARY SEWER MANHOLE
- PROPOSED SANITARY SEWER MANHOLE LABEL (MH 40)
- EXISTING GRAVITY SANITARY SEWER
- PROPOSED SANITARY SEWER LINE
- EXISTING STORM PIPE
- PROPOSED STORM PIPE
- PROPOSED PAVEMENT BASE DRAIN
- EXISTING STORM MANHOLE
- PROPOSED STORM MANHOLE
- EXISTING STORM INLET
- PROPOSED STORM INLET
- EXISTING STORM HEADWALL/ENDWALL
- PROPOSED STORM HEADWALL/ENDWALL
- PROPOSED FLARED END SECTION
- PROPOSED STORM STRUCTURE LABEL (I-9 INLET; EW-3 ENDWALL/HEADWALL; MH-4 STORM MANHOLE; ES-5 FLARED END SECTION)
- PROPOSED PIPE OUTLET PROTECTION
- EXISTING GAS LINE
- EXISTING GAS VALVE
- PROPOSED PAVED PATH
- PROPOSED CONCRETE SIDEWALK
- PROPOSED DRIVEWAY
- PROPOSED LOT NUMBER (100)

N O R T H

LILLIANA DRIVE
BELLA MAY CIRCLE
10' WIDE PATH EASEMENT
DRAINAGE EASEMENT
PROPOSED RIGHT-OF-WAY
PROPOSED CENTERLINE
PRIVATE UTILITY ACCESS EASEMENT
SANITARY SEWER EASEMENT
REVERSE EASEMENT
EXISTING CENTERLINE
TWIN CREEK
OPEN SPACE TRACT 'D'
OPEN SPACE TRACT 'F'
EXISTING BASIN #4
VEHICULAR GATE (15'W) SEE DETAIL PLAN
ANTICIPATED 30' SANITARY SEWER EASEMENT (NOT PROPOSED AS A PART OF THIS PLAN)
40' RESTRICTIONS (TYP.)
PROPOSED TREELINE
STEEL PIN FOUND ELEV. 605.37
STEEL PIN FOUND ELEV. 593.72
STEEL PIN SET ELEV. 596.75
STEEL PIN SET ELEV. 601.50
STEEL PIN SET ELEV. 598.47
STEEL PIN SET ELEV. 596.84
STEEL PIN FOUND ELEV. 583.15
RIPARIAN BARRIER
WALL
PAVED
DRIVEWAY
INV. OUT=583.35'
HW=118 Invs=583.70'
INV. IN=583.70'
INV. OUT=583.70'
INV. IN=583.70'
INV. OUT=583.70'
INV. IN=583.70'
INV. OUT

F:\12\12-0950-02\CAD\Final Plan\Utility.dwg, 27 UTILITY PLAN, 6/7/2022 2:25:58 PM, 1:1

SEE SHEET 25
MATCHLINE

SEE SHEET 26
MATCHLINE

SHEET 25
SHEET 26
SHEET 27

KEY MAP
SCALE: 1"=1000'

NOTE
1. ALL WATER SERVICE CONNECTIONS ARE TO BE INSULATED AT CROSSINGS OF STORM SEWER.

LEGEND

- EXISTING WETLANDS BOUNDARY
- EXISTING STREAM CENTERLINE
- EXISTING ADJOINER LINE
- EXISTING BOUNDARY LINE
- EXISTING CENTERLINE
- PROPOSED CENTERLINE
- EXISTING EDGE OF CARTWAY
- PROPOSED EDGE OF PAVEMENT/CURB
- EXISTING RIGHT-OF-WAY LINE
- PROPOSED RIGHT-OF-WAY LINE
- PROPOSED LOT LINE
- EXISTING EASEMENT LINE
- PROPOSED EASEMENT LINE
- EXISTING FENCE
- EXISTING GUIDE RAIL
- EXISTING RIPARIAN BARRIER
- PROPOSED FENCE
- PROPOSED GUIDE RAIL
- PROPOSED RIPARIAN BARRIER
- EXISTING SIGN
- EXISTING LOT MARKER
- BENCHMARK
- EXISTING VEGETATION
- PROPOSED STREET TREE (SHRUB TREE)
- EXISTING TREELINE/BRUSHLINE
- PROPOSED TREELINE
- EXISTING UTILITY POLE W/ GUY WIRE
- EXISTING OVERHEAD ELECTRIC
- EXISTING UNDERGROUND ELECTRIC
- EXISTING ELECTRIC BOX
- EXISTING LIGHT
- PROPOSED STREET LIGHT
- EXISTING WATERLINE
- PROPOSED WATERLINE
- EXISTING WATER VALVE
- PROPOSED WATER VALVE
- EXISTING FIRE HYDRANT
- PROPOSED FIRE HYDRANT
- EXISTING SANITARY SEWER MANHOLE
- PROPOSED SANITARY SEWER MANHOLE
- PROPOSED SANITARY SEWER MANHOLE LABEL (MH 40)
- EXISTING GRAVITY SANITARY SEWER
- PROPOSED SANITARY SEWER LINE
- EXISTING STORM PIPE
- PROPOSED STORM PIPE
- PROPOSED PAVEMENT BASE DRAIN
- EXISTING STORM MANHOLE
- PROPOSED STORM MANHOLE
- EXISTING STORM INLET
- PROPOSED STORM INLET
- EXISTING STORM HEADWALL/ENDWALL
- PROPOSED STORM HEADWALL/ENDWALL
- PROPOSED FLARED END SECTION
- PROPOSED STORM STRUCTURE LABEL (I-9 INLET, EW-3 ENDWALL/HEADWALL, MH-4 STORM MANHOLE, ES-5 FLARED END SECTION)
- PROPOSED PIPE OUTLET PROTECTION
- EXISTING GAS LINE
- EXISTING GAS VALVE
- PROPOSED PAVED PATH
- PROPOSED CONCRETE SIDEWALK
- PROPOSED DRIVEWAY
- PROPOSED LOT NUMBER (100)

NO.	DATE	REVISION
2	4-25-22	REVISED PER NLT, LEB. CO. ENGINEER & CITY OF LEB. AUTHORITY
1	2-1-22	REVISED PER NLT, LEB. CO. ENGINEER, LCPD, NLTMA, & CITY OF LEB. AUTHORITY

FOR PIONEER MANAGEMENT BY:

SURV. CHIEF: RC
FIELDBOOK NO. VALUE
DRAWN BY: RC
CHKD BY: RC

MANAGER: JAMES C. HENKE
DESIGN BY: JDB/KWG
CHKD BY: JDB/JCH
DRAWING REFERENCE: F:\12\12-0950-02\CAD\Final Plan\Utility.dwg

XREFS:
TB (F:\12\12-0950-02\CAD\Final Plan\Lot Line Tie.dwg)
Property Boundary (F:\12\12-0950-02\CAD\Final Plan\Property Boundary.dwg)
Profile Base (F:\12\12-0950-02\CAD\Final Plan\Profile Base.dwg)
Profile Base (F:\12\12-0950-02\CAD\Final Plan\Profile Base-Block.dwg)
Street Alignment (F:\12\12-0950-02\CAD\Final Plan\A123 Street Alignment.dwg)
Street Alignment (F:\12\12-0950-02\CAD\Final Plan\A123 Street Alignment-Block.dwg)
Plan Base (F:\12\12-0950-02\CAD\Final Plan\Plan Base.dwg)
Plan Base (F:\12\12-0950-02\CAD\Final Plan\Plan Base-Block.dwg)

CLIENT
LANDMARK HOMES AT SWEETBRIAR
c/o MR. CLIFF WEAVER
1737 WEST MAIN STREET
EPHRATA, PA 17522
(717) 733-1536

SCALE
1" = 50'
0 25' 50' 100' 150'

PIONEER
Management, LLC
111 Millersville Road, Lancaster, PA 17603
Phone: 717-481-4955 Fax: 717-481-4955
Email: jhp@pioneermanagementllc.com
Website: www.pioneermanagementllc.com

UTILITY PLAN
FINAL PHASE 4 & REVISED FINAL PHASE 3 SUBDIVISION PLAN
FOR
THE CROSSINGS AT SWEETBRIAR
NORTH LEBANON TOWNSHIP LEBANON COUNTY, PA.

DATE: JUNE 25, 2021
SHEET NO. 27 OF 43
DWG. NO. 12-0950-02-F

F:\12\2-0950-02\CAD\Final Plan\Stormwater Jay 28 STORMWATER MANAGEMENT PLAN, 6/7/2022 2:26:38 PM, 1:1

LEGEND

- EXISTING WETLANDS BOUNDARY
- EXISTING STREAM CENTERLINE
- EXISTING ADJOINER LINE
- EXISTING BOUNDARY LINE
- EXISTING CENTERLINE
- PROPOSED CENTERLINE
- EXISTING EDGE OF CARTWAY
- PROPOSED EDGE OF PAVEMENT/CURB
- EXISTING RIGHT-OF-WAY LINE
- PROPOSED RIGHT-OF-WAY LINE
- PROPOSED LOT LINE
- EXISTING EASEMENT LINE
- PROPOSED EASEMENT LINE
- EXISTING FENCE
- EXISTING GUIDE RAIL
- EXISTING RIPARIAN BARRIER
- PROPOSED FENCE
- PROPOSED GUIDE RAIL
- PROPOSED RIPARIAN BARRIER
- EXISTING SIGN
- EXISTING LOT MARKER
- BENCHMARK
- EXISTING VEGETATION — SHRUB TREE
- EXISTING TREELINE/BRUSHLINE
- PROPOSED TREELINE
- EXISTING CONTOUR LINE — 630
- PROPOSED CONTOUR LINE — 630
- PROPOSED SPOT ELEVATION — + 630.25
- PROPOSED FINISHED FLOOR ELEVATION — FFE=630.70
- PROPOSED GARAGE FINISHED FLOOR ELEVATION — GFE=630.20
- PROPOSED BASEMENT FINISHED FLOOR ELEVATION — BFE=621.70
- EXISTING UTILITY POLE W/ GUY WIRE
- EXISTING OVERHEAD ELECTRIC — OE
- EXISTING UNDERGROUND ELECTRIC — UE
- EXISTING ELECTRIC BOX — E
- EXISTING LIGHT
- PROPOSED STREET LIGHT
- EXISTING WATERLINE — W
- PROPOSED WATERLINE — PW
- EXISTING WATER VALVE — WAV
- PROPOSED WATER VALVE
- EXISTING FIRE HYDRANT
- PROPOSED FIRE HYDRANT
- EXISTING SANITARY SEWER MANHOLE — S
- PROPOSED SANITARY SEWER MANHOLE
- PROPOSED SANITARY SEWER MANHOLE LABEL — MH 40
- EXISTING GRAVITY SANITARY SEWER — S
- PROPOSED SANITARY SEWER LINE
- EXISTING STORM PIPE
- PROPOSED STORM PIPE
- EXISTING STORM MANHOLE
- PROPOSED STORM MANHOLE
- EXISTING STORM INLET
- PROPOSED STORM INLET
- EXISTING STORM HEADWALL/ENDWALL
- PROPOSED STORM HEADWALL/ENDWALL
- PROPOSED FLARED END SECTION
- PROPOSED STORM STRUCTURE LABEL — I-9 (INLET), EW-3 (ENDWALL/HEADWALL), MH-4 (STORM MANHOLE), FES-5 (FLARED END SECTION)
- PROPOSED PIPE OUTLET PROTECTION
- EXISTING GAS LINE — G
- EXISTING GAS VALVE — GV
- PROPOSED PAVED PATH/ CONCRETE SIDEWALK
- PROPOSED LOT NUMBER — 100
- PROPOSED NORTH AMERICAN GREEN S75 LINING
- PROPOSED NORTH AMERICAN GREEN P300 LINING (U.O.N.)
- ERNMX-127 SEEDING & 12" AMENDED SOIL
- POST-DEV. DRAINAGE DIVIDE TO BASIN
- DRAINAGE DIVIDE TO INLET/SWALE
- EX. SOIL PROBE/INFILTROMETER TEST LOCATION — P-39

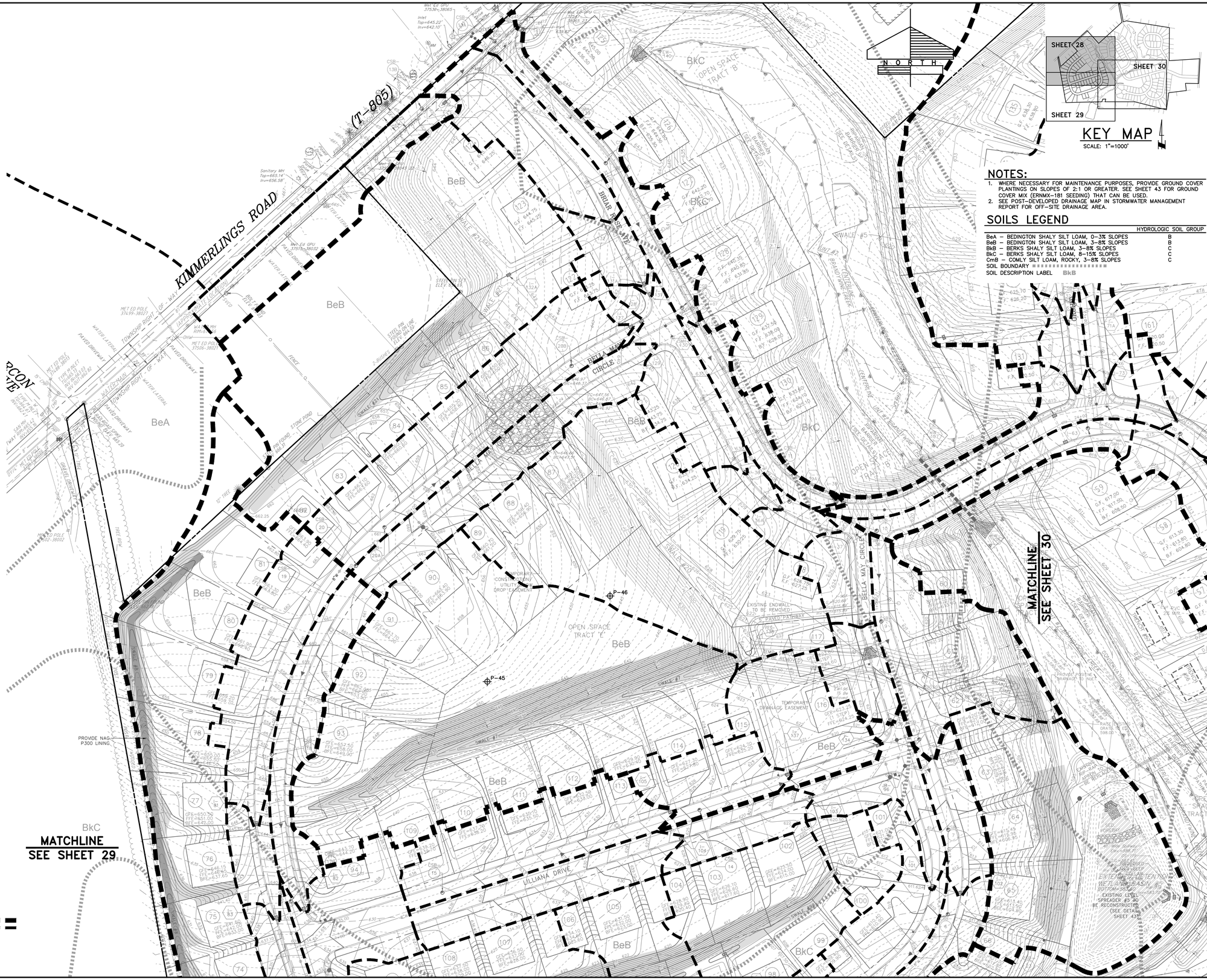

KEY MAP
SCALE: 1"=1000'

NOTES:

1. WHERE NECESSARY FOR MAINTENANCE PURPOSES, PROVIDE GROUND COVER PLANTINGS ON SLOPES OF 2:1 OR GREATER. SEE SHEET 43 FOR GROUND COVER MIX (ERNMX-181 SEEDING) THAT CAN BE USED.
2. SEE POST-DEVELOPED DRAINAGE MAP IN STORMWATER MANAGEMENT REPORT FOR OFF-SITE DRAINAGE AREA.

SOILS LEGEND

	HYDROLOGIC SOIL GROUP
BeA — BEDINGTON SHALY SILT LOAM, 0–3% SLOPES	B
BeB — BEDINGTON SHALY SILT LOAM, 3–8% SLOPES	B
BkB — BERKS SHALY SILT LOAM, 3–8% SLOPES	C
BkC — BERKS SHALY SILT LOAM, 8–15% SLOPES	C
CmB — COMLY SILT LOAM, ROCKY, 3–8% SLOPES	C
SOIL BOUNDARY	
SOIL DESCRIPTION LABEL	BkB

NO.	DATE	REVISION
2	4-25-22	REVISED PER NLT, LEB. CO. ENGINEER & CITY OF LEB. AUTHORITY
1	2-1-22	REVISED PER NLT, LEB. CO. ENGINEER, LCPD, NLTMA, & CITY OF LEB. AUTHORITY

FOR PIONEER MANAGEMENT BY:

MANAGER: JAMES C. HENKE
DESIGN BY: JDB/KWG
CHKD BY: JDB/JCH
SURV. CHIEF: RC
DRAWN BY: RC
FIELDBOOK NO. VALUE
CHKD BY: RC

DRAWING REFERENCE:
C:\12\12-0950-02\CAD\Final Plan\Stormwater.dwg

XREFS:
TB: [F:\12\12-0950-02\CAD\Final Plan\L-TB.dwg]
Base: [F:\12\12-0950-02\CAD\Final Plan\L-Base.dwg]
Proj Base: [F:\12\12-0950-02\CAD\Final Plan\L-Proj Base.dwg]
Title Block: [F:\12\12-0950-02\CAD\Final Plan\L-Title Block.dwg]
Stormwater: [F:\12\12-0950-02\CAD\Final Plan\L-Stormwater.dwg]
Plan Alignment: [F:\12\12-0950-02\CAD\Final Plan\L-Plan Alignment-Base.dwg]
Profile Alignment: [F:\12\12-0950-02\CAD\Final Plan\L-Profile Alignment-Base.dwg]

CLIENT
LANDMARK HOMES AT SWEETBRIAR
c/o MR. CLIFF WEAVER
1737 WEST MAIN STREET
EPHRATA, PA 17522
(717) 733-1536

SCALE
1" = 50'
0 25' 50' 100' 150'

PIONEER Management, LLC
111 Millerstown Road, Lancaster, PA 17603
Phone: (717) 715-1396 Fax: (717) 481-4955
Email: JH@pioneermanagementllc.com
Website: www.pioneermanagementllc.com

STORMWATER MANAGEMENT PLAN

FINAL PHASE 4 & REVISED FINAL
PHASE 3 SUBDIVISION PLAN
FOR
THE CROSSINGS AT SWEET BRIAR
NORTH LEBANON TOWNSHIP LEBANON COUNTY, PA.

DATE: JUNE 25, 2021
SHEET NO. 28 OF 43
DWG. NO. 12-0950-02-F

F:\LDI\12-0950-02\CAD\Final Plan\Stormwater.dwg, 2/5 STORMWATER MANAGEMENT PLAN, 6/7/2022 2:28:28 PM, 1:1

SEE SHEET 28
MATCHLINE

PROVIDE NAG P300 LINING

PROVIDE NAG P300 LINING

LEGEND

- EXISTING WETLANDS BOUNDARY
- EXISTING STREAM CENTERLINE
- EXISTING ADJOINER LINE
- EXISTING BOUNDARY LINE
- EXISTING CENTERLINE
- PROPOSED CENTERLINE
- EXISTING EDGE OF CARTWAY
- PROPOSED EDGE OF PAVEMENT/CURB
- EXISTING RIGHT-OF-WAY LINE
- PROPOSED RIGHT-OF-WAY LINE
- PROPOSED LOT LINE
- EXISTING EASEMENT LINE
- PROPOSED EASEMENT LINE
- EXISTING FENCE
- EXISTING GUIDE RAIL
- EXISTING RIPARIAN BARRIER
- PROPOSED FENCE
- PROPOSED GUIDE RAIL
- PROPOSED RIPARIAN BARRIER
- EXISTING SIGN
- EXISTING LOT MARKER
- BENCHMARK
- EXISTING VEGETATION (SHRUB, TREE)
- EXISTING TREELINE/BRUSHLINE
- PROPOSED TREELINE
- EXISTING CONTOUR LINE (630)
- PROPOSED CONTOUR LINE (630)
- PROPOSED SPOT ELEVATION (+ 630.25)
- PROPOSED FINISHED FLOOR ELEVATION (FFE=630.70)
- PROPOSED GARAGE FINISHED FLOOR ELEVATION (GFE=630.20)
- PROPOSED BASEMENT FINISHED FLOOR ELEVATION (BFE=621.70)
- EXISTING UTILITY POLE W/ GUY WIRE
- EXISTING OVERHEAD ELECTRIC
- EXISTING UNDERGROUND ELECTRIC
- EXISTING ELECTRIC BOX
- EXISTING LIGHT
- PROPOSED STREET LIGHT
- EXISTING WATERLINE
- PROPOSED WATERLINE
- EXISTING WATER VALVE
- PROPOSED WATER VALVE
- EXISTING FIRE HYDRANT
- PROPOSED FIRE HYDRANT
- EXISTING SANITARY SEWER MANHOLE
- PROPOSED SANITARY SEWER MANHOLE
- PROPOSED SANITARY SEWER MANHOLE LABEL (MH 40)
- EXISTING GRAVITY SANITARY SEWER
- PROPOSED SANITARY SEWER LINE
- EXISTING STORM PIPE
- PROPOSED STORM PIPE
- EXISTING STORM MANHOLE
- PROPOSED STORM MANHOLE
- EXISTING STORM INLET
- PROPOSED STORM INLET
- EXISTING STORM HEADWALL/ENDWALL
- PROPOSED STORM HEADWALL/ENDWALL
- PROPOSED FLARED END SECTION
- PROPOSED STORM STRUCTURE LABEL (I-9 INLET, EW-3 ENDWALL/HEADWALL, MH-4 STORM MANHOLE, ES-5 FLARED END SECTION)
- PROPOSED PIPE OUTLET PROTECTION
- EXISTING GAS LINE
- EXISTING GAS VALVE
- PROPOSED PAVED PATH/CONCRETE SIDEWALK
- PROPOSED LOT NUMBER (100)
- PROPOSED NORTH AMERICAN GREEN S75 LINING
- PROPOSED NORTH AMERICAN GREEN P300 LINING (U.O.N.)
- ERNMX-127 SEEDING & 12" AMENDED SOIL
- POST-DEV. DRAINAGE DIVIDE TO BASIN
- DRAINAGE DIVIDE TO INLET/SWALE
- EX. SOIL PROBE/INFILTROMETER TEST LOCATION (P-39)

NOTES:

1. WHERE NECESSARY FOR MAINTENANCE PURPOSES, PROVIDE GROUND COVER PLANTINGS ON SLOPES OF 2:1 OR GREATER. SEE SHEET 43 FOR GROUND COVER MIX (ERNMX-181 SEEDING) THAT CAN BE USED.
2. SEE POST-DEVELOPED DRAINAGE MAP IN STORMWATER MANAGEMENT REPORT FOR OFF-SITE DRAINAGE AREA.

SOILS LEGEND

	HYDROLOGIC SOIL GROUP
BeA – BEDINGTON SHALY SILT LOAM, 0–3% SLOPES	B
BeB – BEDINGTON SHALY SILT LOAM, 3–8% SLOPES	B
BkB – BERKS SHALY SILT LOAM, 3–8% SLOPES	C
BkC – BERKS SHALY SILT LOAM, 8–15% SLOPES	C
CmB – COMLY SILT LOAM, ROCKY, 3–8% SLOPES	C
SOIL BOUNDARY	
SOIL DESCRIPTION LABEL	BkB

LILLIANA DRIVE
EMILY MAY CIRCLE
INFILTRATION BASIN #11
BOTTOM ELEV.=589.50
PERMANENT ROCK FILTER OUTLET
SEDIMENT FOREBAY (TYP.)
SWALE #14A
SWALE #14B
8' WIDE TOP OF BERM ELEV.=604.50
SWALE #13
SWALE #12A
SWALE #12B
SWALE #11
PROPOSED TREELINE
STEEL PIN FOUND ELEV. 605.37
STEEL PIN FOUND ELEV. 593.72
STEEL PIN FOUND ELEV. 583.15
STEEL PIN SET ELEV. 588.47
STEEL PIN SET ELEV. 596.84
PROVIDE NAG C350 LINING (SPILLWAY LINING) TO HATCHED AREA
FIELD LOCATED EXISTING UGI GAS LINE. APPROVAL BY UGI IS REQUIRED FOR IMPROVEMENTS WITHIN THE UNDOCUMENTED GAS LINE EASEMENT PRIOR TO FINAL PLAN APPROVAL.
PROVIDE NAG S75 ON ALL DISTURBED 3:1 SLOPES (TYP.)
CENTERLINE UNT #3 BRANDYWINE CREEK
EXISTING BASIN #4
EMERGENCY SPILLWAY INV. 604.80
VEHICULAR GATE (15'W) SEE DETAIL PLAN
STEEL PALISADE ELEV. 606.76
STEEL PIN SET ELEV. 604.61
30" TREE
24" TREE
WALL
GUIDE RAIL BARRIER
HDPE PIPE TO POND 2 INV. 599.37
PAVED
DRIVEWAY
PROPOSED BASIN #3A BOTTOM ELEV.=598.00
EXISTING DETENTION WETLAND BASIN #1 BOTTOM=595.00
EXISTING LEVEL SPREADER #5 TO BE RECONSTRUCTED (SEE DETAIL SHEET 43)
OPEN SPACE TRACT 'D'
OPEN SPACE TRACT 'F'
OPEN SPACE TRACT 'G'
OPEN SPACE TRACT 'H'
BkB
BkC
BeB
CmB
W

MATCHLINE
SEE SHEET 30

N O R T H

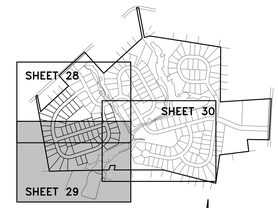

KEY MAP
SCALE: 1"=1000'

NO.	DATE	REVISION
2	4-25-22	REVISED PER NLT, LEB. CO. ENGINEER & CITY OF LEB. AUTHORITY
1	2-1-22	REVISED PER NLT, LEB. CO. ENGINEER, LCPD, NLTMA, & CITY OF LEB. AUTHORITY

FOR PIONEER MANAGEMENT BY:

MANAGER: JAMES C. HENKE
SURV. CHIEF: RC
FIELDBOOK NO. VALUE
DESIGN BY: JDB/KWG
CHKD BY: JDB/JCH
DRAWN BY: RC
CHKD BY: RC
DRAWING REFERENCE: C:\LVD\12-0950-02\CAD\Final Plan\Stormwater.dwg
XREFS:
TB: [F:\LVD\12-0950-02\CAD\Final Plan\L-TB.dwg]
Plan Base: [F:\LVD\12-0950-02\CAD\Final Plan\L-Base.dwg]
Plan Base: [F:\LVD\12-0950-02\CAD\Final Plan\L-Base-Block.dwg]
Title Block: [F:\LVD\12-0950-02\CAD\Final Plan\L-Title Block.dwg]
Sheet Index: [F:\LVD\12-0950-02\CAD\Final Plan\L-Sheet Index.dwg]
Alignments: [F:\LVD\12-0950-02\CAD\Survey\Alignments\A123 Alignments-Base.dwg]
[F:\LVD\12-0950-02\CAD\Survey\Alignments\A123 Alignments-Block.dwg]
[F:\LVD\12-0950-02\CAD\Survey\Alignments\A124 Alignments-Base.dwg]
[F:\LVD\12-0950-02\CAD\Survey\Alignments\A124 Alignments-Block.dwg]

CLIENT
LANDMARK HOMES AT SWEETBRIAR
c/o MR. CLIFF WEAVER
1737 WEST MAIN STREET
EPHRATA, PA 17522
(717) 733-1536

SCALE: 1" = 50'
0 25' 50' 100' 150'

PIONEER Management, LLC
111 Millersville Road, Lancaster, PA 17603
Phone: (717) 481-4500 Fax: (717) 481-4955
Email: info@pioneermanagementllc.com
Website: www.pioneermanagementllc.com

STORMWATER MANAGEMENT PLAN
FINAL PHASE 4 & REVISED FINAL PHASE 3 SUBDIVISION PLAN
FOR
THE CROSSINGS AT SWEET BRIAR
NORTH LEBANON TOWNSHIP LEBANON COUNTY, PA.

DATE: JUNE 25, 2021
SHEET NO. 29 OF 43
DWG. NO. 12-0950-02-F

F:\12\12-0950-02\CAD\Final Plan\Stormwater Dwg_30 STORMWATER MANAGEMENT PLAN_4-27-2022 2:26:25 PM_1:1

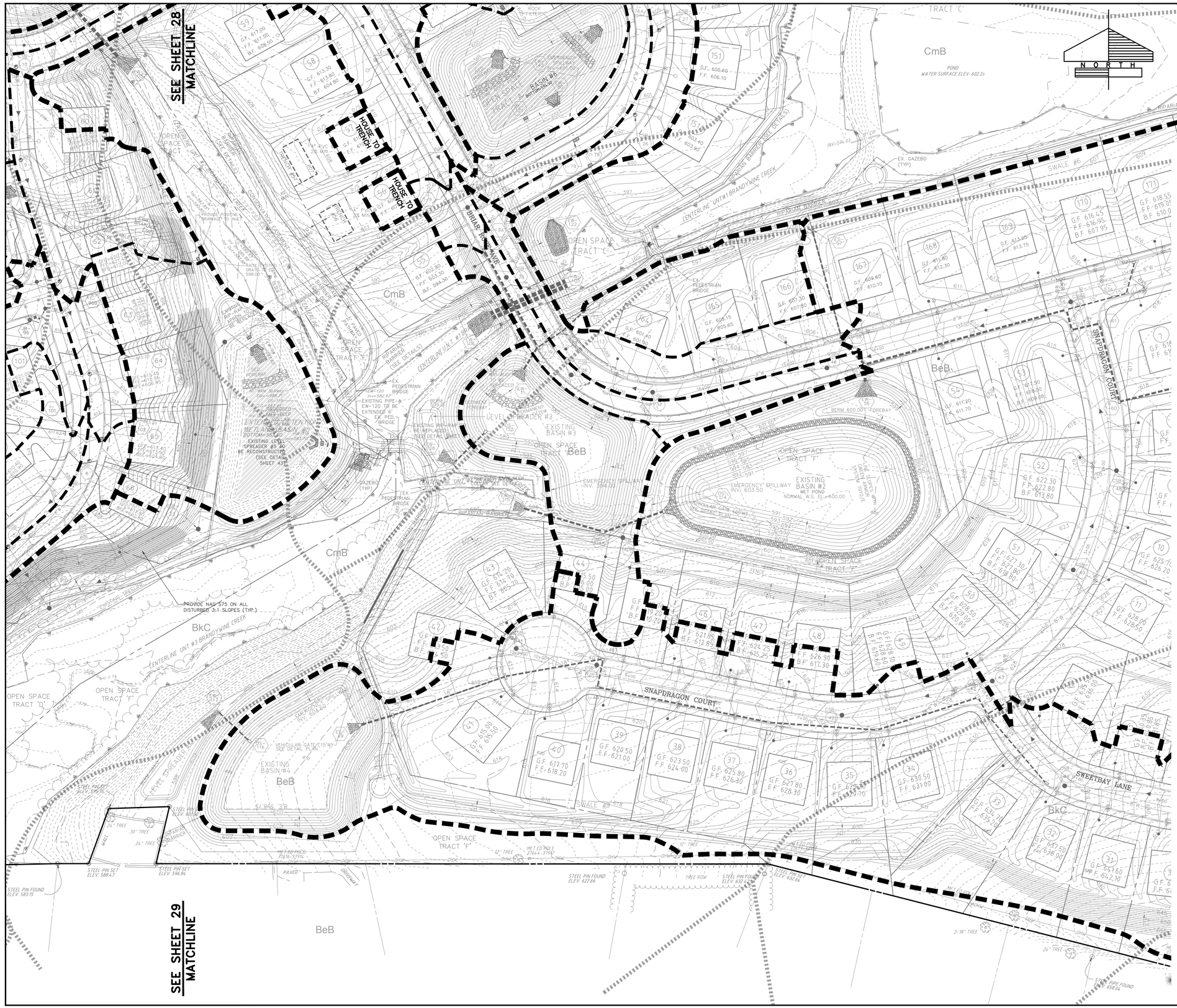

NOTES:

1. WHERE NECESSARY FOR MAINTENANCE PURPOSES, PROVIDE GROUND COVER PLANTINGS ON SLOPES OF 2:1 OR GREATER. SEE SHEET 43 FOR GROUND COVER MIX (ERNMX-181 SEEDING) THAT CAN BE USED.
2. SEE POST-DEVELOPED DRAINAGE MAP IN STORMWATER MANAGEMENT REPORT FOR OFF-SITE DRAINAGE AREA.

SOILS LEGEND

	HYDROLOGIC SOIL GROUP
BeA – BEDINGTON SHALY SILT LOAM, 0–3% SLOPES	B
BeB – BEDINGTON SHALY SILT LOAM, 3–8% SLOPES	B
BkB – BERKS SHALY SILT LOAM, 3–8% SLOPES	C
BkC – BERKS SHALY SILT LOAM, 8–15% SLOPES	C
CmB – COMLY SILT LOAM, ROCKY, 3–8% SLOPES	C
SOIL BOUNDARY	
SOIL DESCRIPTION LABEL	BkB

LEGEND

- EXISTING WETLANDS BOUNDARY
- EXISTING STREAM CENTERLINE
- EXISTING ADJOINER LINE
- EXISTING BOUNDARY LINE
- EXISTING CENTERLINE
- PROPOSED CENTERLINE
- EXISTING EDGE OF CARTWAY
- PROPOSED EDGE OF PAVEMENT/CURB
- EXISTING RIGHT-OF-WAY LINE
- PROPOSED RIGHT-OF-WAY LINE
- PROPOSED LOT LINE
- EXISTING EASEMENT LINE
- PROPOSED EASEMENT LINE
- EXISTING FENCE
- EXISTING GUIDE RAIL
- EXISTING RIPARIAN BARRIER
- PROPOSED FENCE
- PROPOSED GUIDE RAIL
- PROPOSED RIPARIAN BARRIER
- EXISTING SIGN
- EXISTING LOT MARKER
- BENCHMARK
- EXISTING VEGETATION (SHRUB, TREE)
- EXISTING TREELINE/BRUSHLINE
- PROPOSED TREELINE
- EXISTING CONTOUR LINE (630)
- PROPOSED CONTOUR LINE (630)
- PROPOSED SPOT ELEVATION (+ 630.25)
- PROPOSED FINISHED FLOOR ELEVATION (FFE=630.70)
- PROPOSED GARAGE FINISHED FLOOR ELEVATION (GFE=630.20)
- PROPOSED BASEMENT FINISHED FLOOR ELEVATION (BFE=621.70)
- EXISTING UTILITY POLE W/ GUY WIRE
- EXISTING OVERHEAD ELECTRIC (OE)
- EXISTING UNDERGROUND ELECTRIC (UE)
- EXISTING ELECTRIC BOX (E)
- EXISTING LIGHT
- PROPOSED STREET LIGHT
- EXISTING WATERLINE (W)
- PROPOSED WATERLINE (WL)
- EXISTING WATER VALVE (WV)
- PROPOSED WATER VALVE
- EXISTING FIRE HYDRANT
- PROPOSED FIRE HYDRANT
- EXISTING SANITARY SEWER MANHOLE (S)
- PROPOSED SANITARY SEWER MANHOLE
- PROPOSED SANITARY SEWER MANHOLE LABEL (MH 40)
- EXISTING GRAVITY SANITARY SEWER (S)
- PROPOSED SANITARY SEWER LINE
- EXISTING STORM PIPE
- PROPOSED STORM PIPE
- EXISTING STORM MANHOLE
- PROPOSED STORM MANHOLE
- EXISTING STORM INLET
- PROPOSED STORM INLET
- EXISTING STORM HEADWALL/ENDWALL
- PROPOSED STORM HEADWALL/ENDWALL
- PROPOSED FLARED END SECTION
- PROPOSED STORM STRUCTURE LABEL (I-9 INLET; EW-3 ENDWALL/HEADWALL; MH-4 STORM MANHOLE; ES-5 FLARED END SECTION)
- PROPOSED PIPE OUTLET PROTECTION
- EXISTING GAS LINE (G)
- EXISTING GAS VALVE (GV)
- PROPOSED PAVED PATH/ CONCRETE SIDEWALK
- PROPOSED LOT NUMBER (100)
- PROPOSED NORTH AMERICAN GREEN S75 LINING
- PROPOSED NORTH AMERICAN GREEN P300 LINING (U.O.N.)
- ERNMX-127 SEEDING & 12" AMENDED SOIL
- POST-DEV. DRAINAGE DIVIDE TO BASIN
- DRAINAGE DIVIDE TO INLET/SWALE
- EX. SOIL PROBE/INFILTROMETER TEST LOCATION (P-39)

NO.	DATE	REVISION
2	4-25-22	REVISED PER NLT, LEB. CO. ENGINEER & CITY OF LEB. AUTHORITY
1	2-1-22	REVISED PER NLT, LEB. CO. ENGINEER, LCPD, NLTMA, & CITY OF LEB. AUTHORITY

FOR PIONEER MANAGEMENT BY:

FIELDBOOK NO. VALUE

SURV. CHIEF: RC

DRAWN BY: RC

CHKD BY: RC

MANAGER: JAMES C. HENKE

DESIGN BY: JDB/KWG

CHKD BY: JDB/JCH

DRAWING REFERENCE: C:\12\12-0950-02\CAD\Final Plan\Stormwater.dwg

XREFS:

CLIENT
LANDMARK HOMES AT SWEETBRIAR
c/o MR. CLIFF WEAVER
1737 WEST MAIN STREET
EPHRATA, PA 17522
(717) 733-1536

SCALE
1" = 50'
0 25' 50' 100' 150'

PIONEER Management, LLC
711 Willerstie Road, Lancaster, PA 17603
Phone: (717) 481-4955 Fax: (717) 481-4955
Email: jb@pioneermanagementllc.com
Website: www.pioneermanagementllc.com

STORMWATER MANAGEMENT PLAN

FINAL PHASE 4 & REVISED FINAL PHASE 3 SUBDIVISION PLAN
FOR
THE CROSSINGS AT SWEET BRIAR
NORTH LEBANON TOWNSHIP LEBANON COUNTY, PA

DATE: JUNE 25, 2021

SHEET NO. 30 OF 43

DWG. NO. 12-0950-02-F

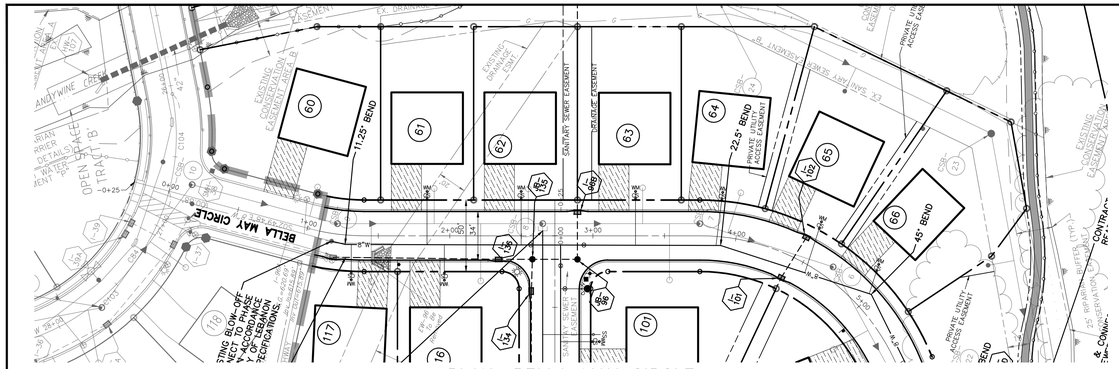

PLAN: BELLA MAY CIRCLE

SCALE: 1" = 50' HORIZ.

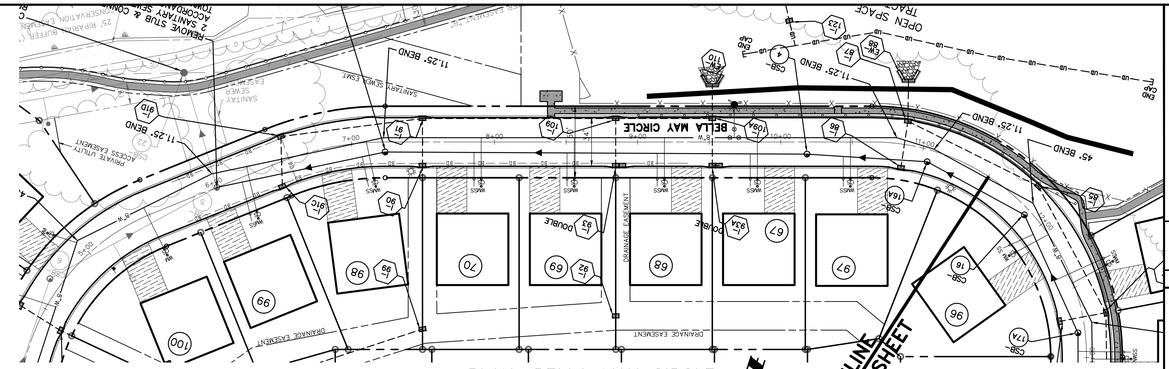

PLAN: BELLA MAY CIRCLE

SCALE: 1" = 50' HORIZ.

NOTES:
1. ALL CROSSED OUT TEXT IS NOW AS-BUILT AS PRIOR PHASE UTILITIES ARE INSTALLED.
2. A MINIMUM VERTICAL SEPARATION OF 18" SHALL BE MAINTAINED FROM OTHER UTILITIES TO THE WATER MAIN. A MINIMUM OF 12" SEPARATION IS ALLOWED WHEN THE WATER MAIN IS INSULATED.
3. INDIVIDUAL WATER SERVICE CONNECTIONS ARE TO BE INSULATED AT CROSSINGS WITH STORM SEWER PIPING.
4. MAXIMUM DEPTH TO TOP OF WATER MAIN SHALL BE 6.5'.

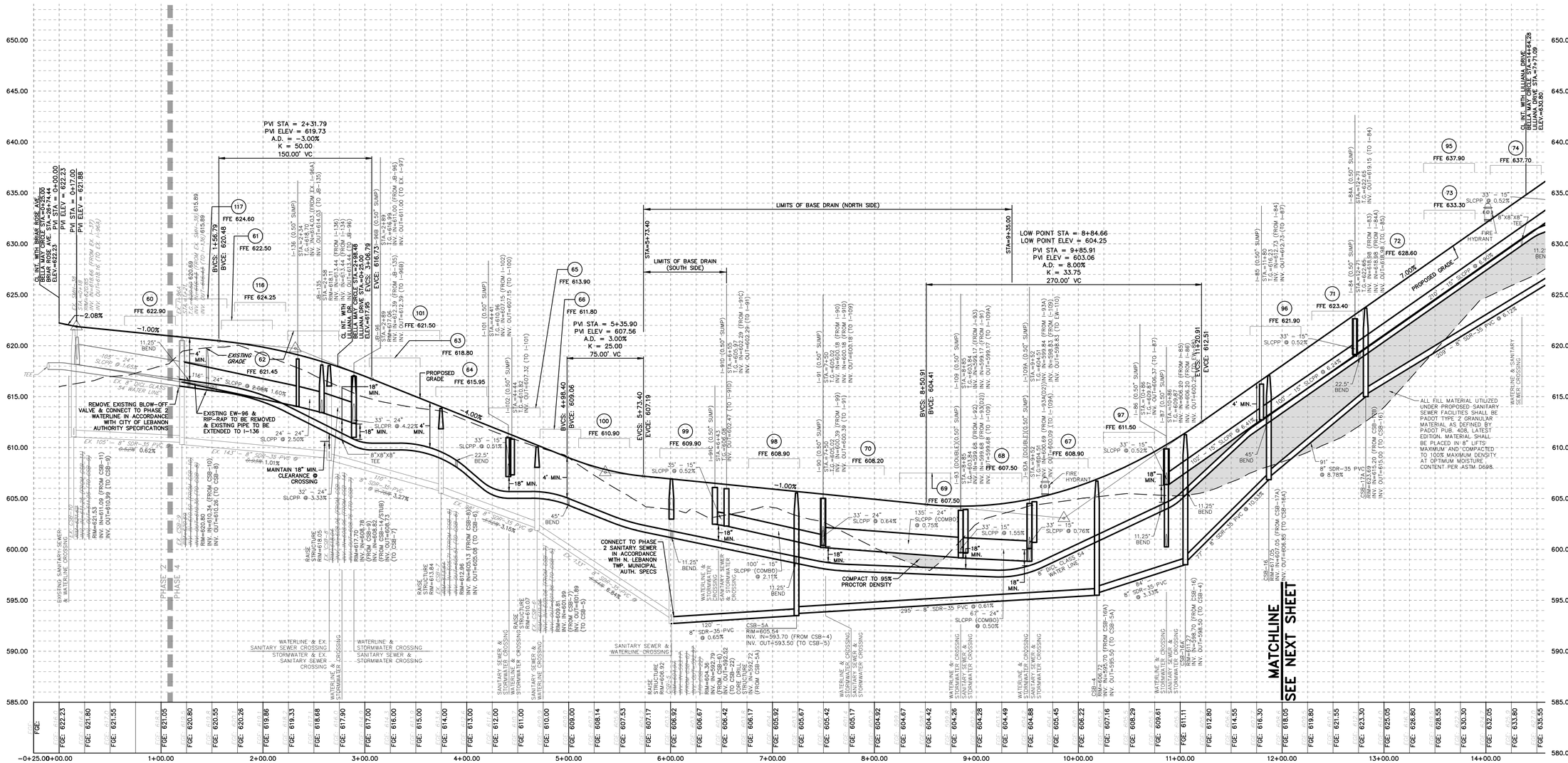
PVI STA = 2+31.79
PVI ELEV = 619.73
A.D. = -3.00%
K = 50.00
150.00' VC
LIMITS OF BASE DRAIN (NORTH SIDE)
LIMITS OF BASE DRAIN (SOUTH SIDE)
LOW POINT STA = 8+84.66
LOW POINT ELEV = 604.25
PVI STA = 9+85.91
PVI ELEV = 603.06
A.D. = 8.00%
K = 33.75
270.00' VC
PVI STA = 5+35.90
PVI ELEV = 607.56
A.D. = 3.00%
K = 25.00
75.00' VC
CL INT. WITH BRIAR ROSE AVE.
BELLA MAY CIRCLE STA.=0+00.00
ELEV.=622.23
CL INT. WITH LILLIANA DRIVE
BELLA MAY CIRCLE STA.=4+64.28
ELEV.=630.80
CL INT. WITH
BELLA MAY CIRCLE STA.=2+08.48
LILLIANA DRIVE STA.=0+25.00
ELEV.=620.48
REMOVE EXISTING BLOW-OFF VALVE & CONNECT TO PHASE 2 WATERLINE IN ACCORDANCE WITH CITY OF LEBANON AUTHORITY SPECIFICATIONS
EXISTING EW-98 & RIP-RAP TO BE REMOVED & EXISTING PIPE TO BE EXTENDED TO I-136
MAINTAIN 18" MIN. CLEARANCE @ CROSSING
CONNECT TO PHASE 2 SANITARY SEWER IN ACCORDANCE WITH N. LEBANON TWP. MUNICIPAL AUTH. SPECS
COMPACT TO 95% PROCTOR DENSITY
ALL FILL MATERIAL UTILIZED UNDER PROPOSED SANITARY SEWER FACILITIES SHALL BE PADOT TYPE 2 GRANULAR MATERIAL AS DEFINED BY PADOT PUB. 408, LATEST EDITION. MATERIAL SHALL BE PLACED IN 8" LIFTS MAXIMUM AND COMPACTED TO 100% MAXIMUM DENSITY AT OPTIMUM MOISTURE CONTENT PER ASTM-D698.
EXISTING SANITARY SEWER & WATERLINE CROSSING
PHASE 2
PHASE 4
MATCHLINE SEE NEXT SHEET
PROPOSED GRADE
EXISTING GRADE
FFE 624.60
FFE 622.50
FFE 624.25
FFE 622.90
FFE 621.45
FFE 621.50
FFE 618.80
FFE 615.90
FFE 613.90
FFE 611.80
FFE 610.90
FFE 609.90
FFE 608.90
FFE 608.20
FFE 607.50
FFE 608.90
FFE 611.50
FFE 612.91
FFE 637.90
FFE 637.70
FFE 633.30
FFE 628.60
FFE 623.40
FFE 621.90
-1.00%
2.08%
4.00%
7.00%
-2.00%
-4.00%
-1.00%
4.00%
-2.00%
8" SDR-35 PVC @ 10.03%
8" SDR-35 PVC @ 8.78%
8" SDR-35 PVC @ 6.42%
8" SDR-35 PVC @ 4.22%
8" SDR-35 PVC @ 3.27%
8" SDR-35 PVC @ 3.15%
8" SDR-35 PVC @ 3.33%
8" SDR-35 PVC @ 0.61%
8" SDR-35 PVC @ 0.65%
8" SDR-35 PVC @ 0.52%
8" SDR-35 PVC @ 0.64%
8" SDR-35 PVC @ 0.76%
8" SDR-35 PVC @ 1.55%
8" SDR-35 PVC @ 0.52%
8" SDR-35 PVC @ 0.52%
8" SDR-35 PVC @ 0.52%
8" SDR-35 PVC @ 6.42%
8" SDR-35 PVC @ 10.03%
SLCPP @ 0.51%
SLCPP @ 0.64%
SLCPP @ 0.75%
SLCPP @ 1.55%
SLCPP @ 0.76%
SLCPP @ 0.52%
SLCPP @ 0.52%
SLCPP @ 0.52%
SLCPP @ 6.42%
SLCPP @ 10.03%
SLCPP @ 0.50%
SLCPP @ 2.11%
SLCPP @ 4.22%
SLCPP @ 3.33%
SLCPP @ 0.52%
SLCPP @ 6.42%
SLCPP @ 10.03%
SLCPP @ 4.60%
SLCPP @ 0.52%
SLCPP @ 0.61%
SLCPP @ 0.50%
SLCPP @ 0.52%
SLCPP @ 0.52%
SLCPP @ 0.52

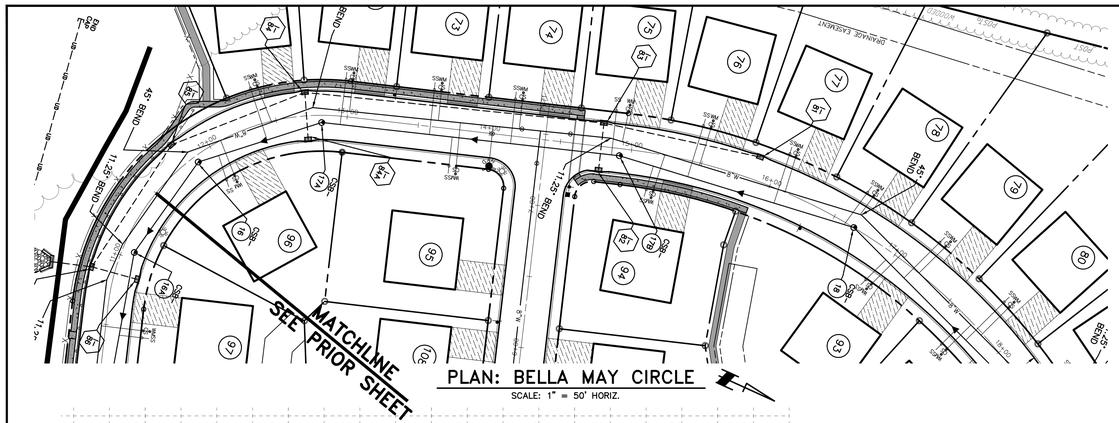

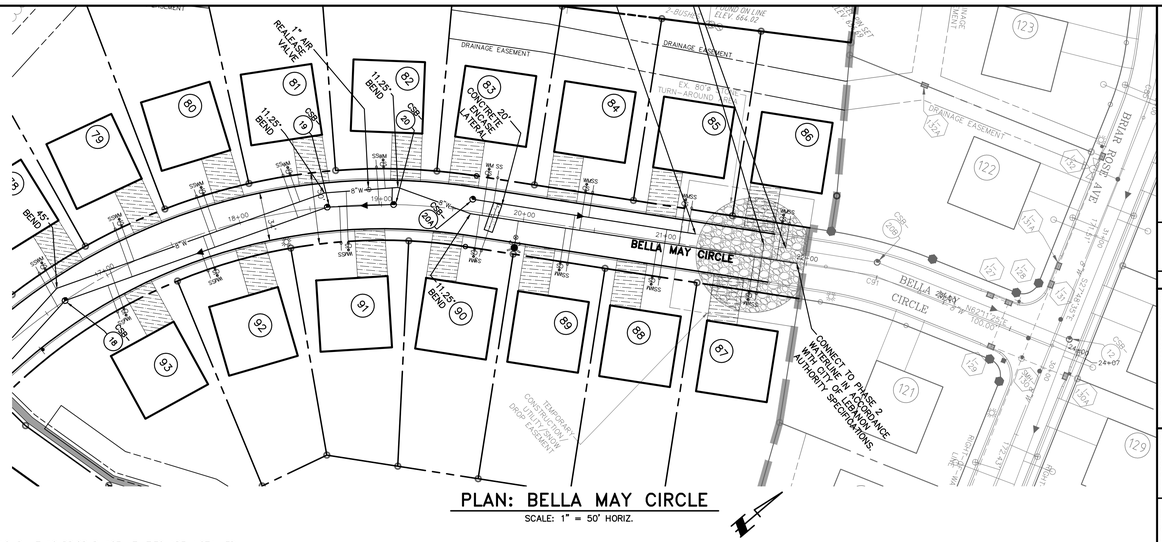

NOTES:
1. ALL CROSSED OUT TEXT IS NOW AS-BUILT AS PRIOR PHASE UTILITIES ARE INSTALLED.
2. A MINIMUM VERTICAL SEPARATION OF 18" SHALL BE MAINTAINED FROM OTHER UTILITIES TO THE WATER MAIN. A MINIMUM OF 12" SEPARATION IS ALLOWED WHEN THE WATER MAIN IS INSULATED.
3. INDIVIDUAL WATER SERVICE CONNECTIONS ARE TO BE INSULATED AT CROSSINGS WITH STORM SEWER PIPING.
4. MAXIMUM DEPTH TO TOP OF WATER MAIN SHALL BE 6.5'.

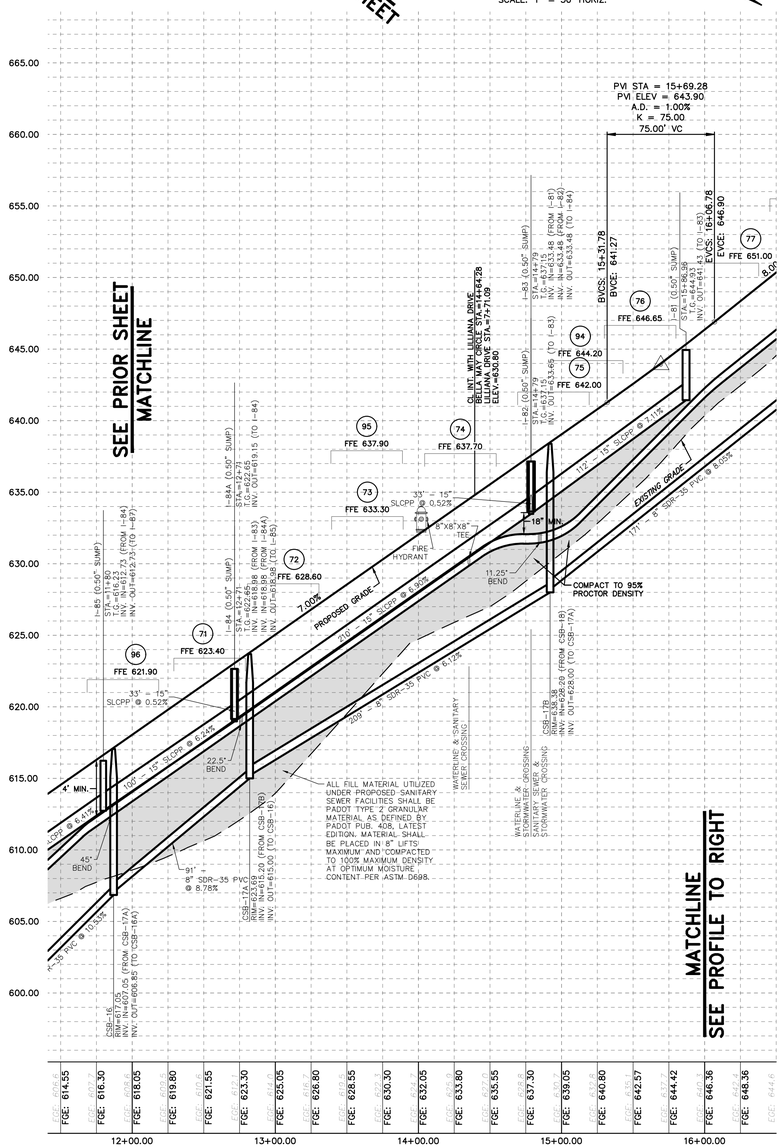

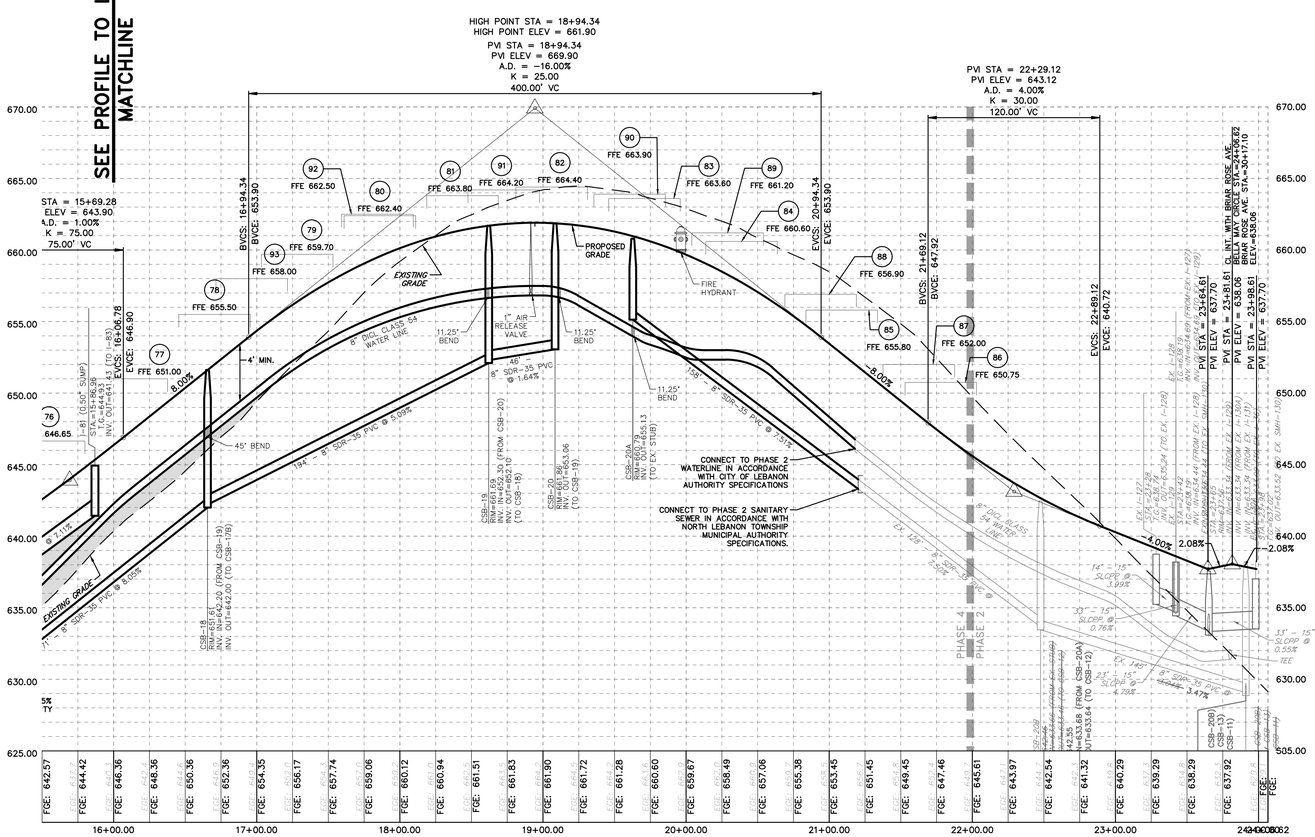

NO.	DATE	REVISION
1	2-1-22	REVISED PER N.L.T. LEB. CO. ENGINEER, LCPD, NLTMA, & CITY OF LEB. AUTHORITY
2	4-25-22	REVISED PER N.L.T. LEB. CO. ENGINEER & CITY OF LEB. AUTHORITY

FOR PIONEER MANAGEMENT BY:

FIELDBOOK NO.
VALUE

SURV. CHIEF:
RC

DRAWN BY:
RC

CHKD BY:
RC

MANAGER:
JAMES C. HENKE

DESIGN BY:
JDB/KWG

CHKD BY:
JDB/JCH

DRAWING REFERENCE:
X:\12\12-0950-02\CAD\Final-Prel\Profiles.dwg

XREFS:
Ref: [F:\12\12-0950-02\CAD\Final-Prel\X-refs\TB.dwg]
X-Base: [F:\12\12-0950-02\CAD\Final-Prel\X-refs\Plan-base.dwg]
X-Base: [F:\12\12-0950-02\CAD\Final-Prel\X-refs\X-Base.dwg]
Ref: [F:\12\12-0950-02\CAD\Final-Prel\X-refs\Plan-Base.dwg]
Ref: [F:\12\12-0950-02\CAD\Final-Prel\X-refs\Plan-Base.dwg]
Ref: [F:\12\12-0950-02\CAD\Final-Prel\X-refs\Plan-Base.dwg]
Ref: [F:\12\12-0950-02\CAD\Final-Prel\X-refs\Plan-Base.dwg]
Ref: [F:\12\12-0950-02\CAD\Final-Prel\X-refs\Plan-Base.dwg]

CLIENT
LANDMARK HOMES AT SWEETBRIAR
c/o MR. CLIFF WEAVER
1737 WEST MAIN STREET
EPHRATA, PA 17522
(717) 733-1536

SCALE
1" = 50'
0 25' 50' 100' 150'

PIONEER
Management, LLC
111 Millersville Road, Lancaster, PA 17603
Phone: (717) 435-8581 Fax: (717) 481-4955
Email: jhp@pioneermanagementllc.com
Website: www.pioneermanagementllc.com

BELLA MAY CIRCLE PLAN & PROFILE
FINAL PHASE 4 & REVISED FINAL
PHASE 3 SUBDIVISION PLAN
FOR
THE CROSSINGS AT SWEET BRIAR
NORTH LEBANON TOWNSHIP LEBANON COUNTY, PA.

DATE: JUNE 25, 2021

SHEET NO. 32 OF 43

DWG. NO. 12-0950-02-F

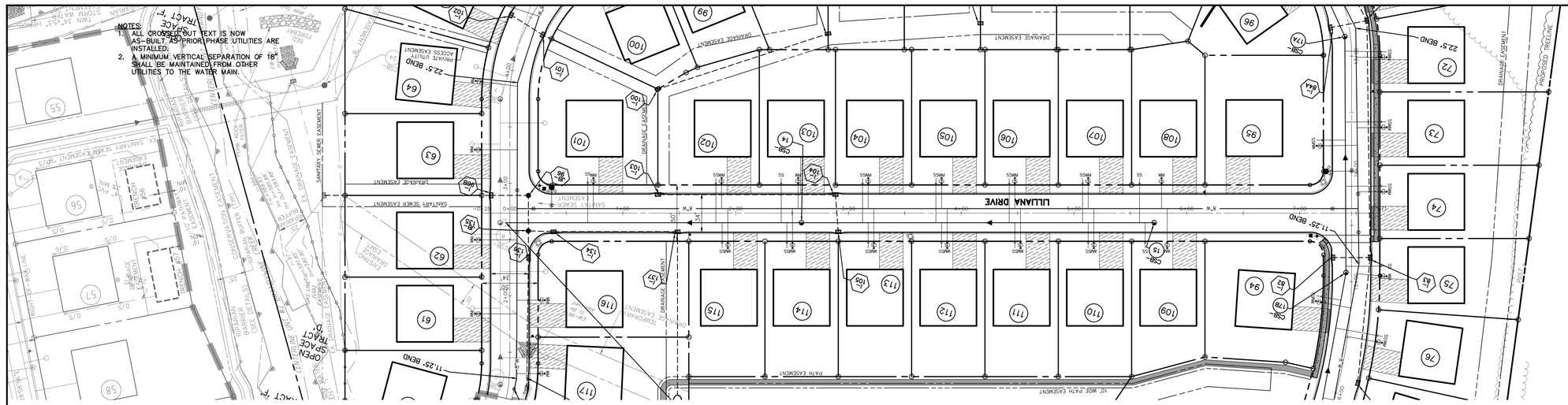

PLAN: LILLIANA DRIVE

SCALE: 1" = 50' HORIZ.

NOTES:
1. ALL CROSSED OUT TEXT IS NOW AS-BUILT AS PRIOR PHASE UTILITIES ARE INSTALLED.
2. A MINIMUM VERTICAL SEPARATION OF 18" SHALL BE MAINTAINED FROM OTHER UTILITIES TO THE WATER MAIN. A MINIMUM OF 12" SEPARATION IS ALLOWED WHEN THE WATER MAIN IS INSULATED.
3. INDIVIDUAL WATER SERVICE CONNECTIONS ARE TO BE INSULATED AT CROSSINGS WITH STORM SEWER PIPING.
4. MAXIMUM DEPTH TO TOP OF WATER MAIN SHALL BE 6.5'.

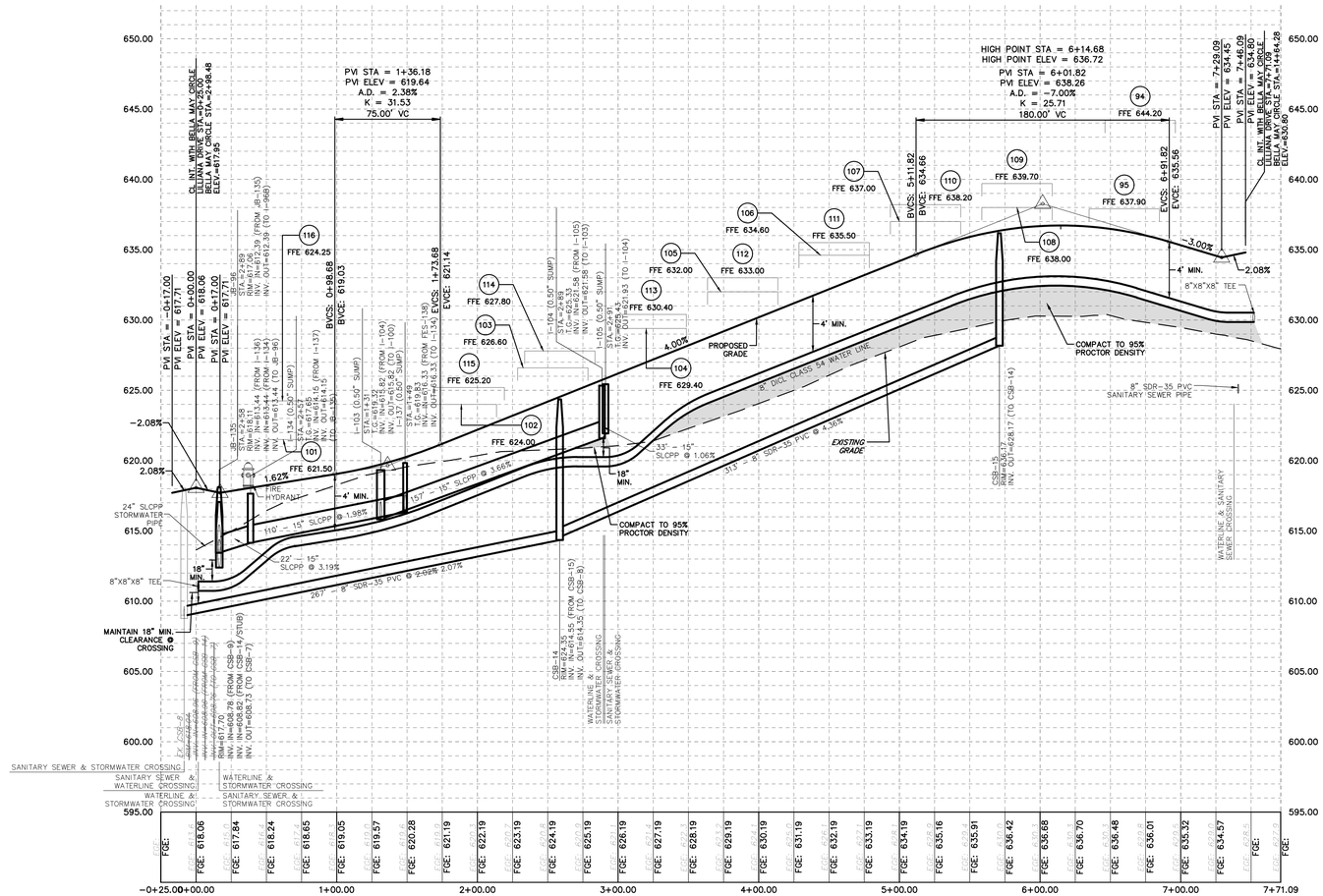

PROFILE: LILLIANA DRIVE

SCALE: 1" = 50' HORIZ.
1" = 5' VERT.

NO.	DATE	REVISION
1	2-1-22	REVISED PER N.L.T. LEB. CO. ENGINEER, LCPD, NLTMA, & CITY OF LEB. AUTHORITY
2	4-25-22	REVISED PER N.L.T. LEB. CO. ENGINEER & CITY OF LEB. AUTHORITY

MANAGER: JAMES C. HENKE
DESIGN BY: JDB/KWG
CHKD BY: JDB/JCH
SURV. CHIEF: RC
DRAWN BY: RC
CHKD BY: RC
FIELDBOOK NO. VALUE
FOR PIONEER MANAGEMENT BY:

DRAWING REFERENCE:
X:\LV\12-0950-02\CAD\Final-Ph4\Profiles.dwg

XREFS:
Ttb: [F:\LV\12-0950-02\CAD\Final-Ph4\X-refs\Ttb.dwg]
Plan-Base: [F:\LV\12-0950-02\CAD\Final-Ph4\X-refs\Plan-Base.dwg]
X-Base: [F:\LV\12-0950-02\CAD\Final-Ph4\X-refs\X-Base.dwg]
Profile-Base: [F:\LV\12-0950-02\CAD\Final-Ph4\X-refs\Profile-Base.dwg]
Ph4-Ttb-Block: [F:\LV\12-0950-02\CAD\Final-Ph4\X-refs\Ph4-Ttb-Block.dwg]
Ph4-Plan-Block: [F:\LV\12-0950-02\CAD\Final-Ph4\X-refs\Ph4-Plan-Block.dwg]
Ph4-Profile-Block: [F:\LV\12-0950-02\CAD\Final-Ph4\X-refs\Ph4-Profile-Block.dwg]
Ph4-Xsec-Block: [F:\LV\12-0950-02\CAD\Final-Ph4\X-refs\Ph4-Xsec-Block.dwg]

CLIENT
LANDMARK HOMES AT SWEETBRIAR
c/o MR. CLIFF WEAVER
1737 WEST MAIN STREET
EPHRATA, PA 17522
(717) 733-1536

SCALE: 1" = 50' (0, 25', 50', 100', 150')

PIONEER Management, LLC
111 Millersville Road, Lancaster, PA 17603
Phone: (717) 461-4855 Fax: (717) 461-4855
Email: jrb@pioneermanagementllc.com
Website: www.pioneermanagementllc.com

LILLIANA DRIVE PLAN & PROFILE
FINAL PHASE 4 & REVISED FINAL PHASE 3 SUBDIVISION PLAN
FOR
THE CROSSINGS AT SWEET BRIAR
NORTH LEBANON TOWNSHIP LEBANON COUNTY, PA

DATE: JUNE 25, 2021
SHEET NO. 33 OF 43
DWG. NO. 12-0950-02-F

F:\12\12-0950-02\CAD\Final Plan\Profiles.dwg, 34 PROFILES\LANDXDEV\DEFAULT\PROFILES, 6/7/2022 2:27:34 PM, 1:1

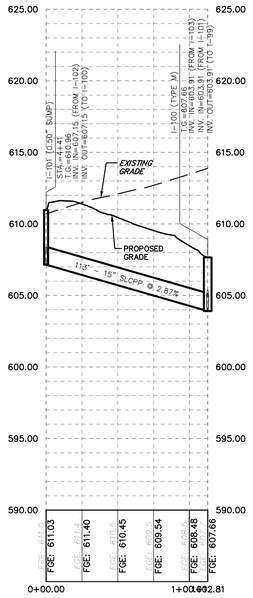

PROFILE: I-101 TO I-100

SCALE: 1" = 50' HORIZ.
1" = 5' VERT.

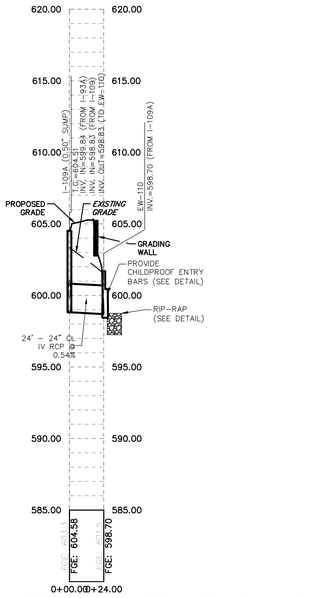

PROFILE: I-109A TO EW-110

SCALE: 1" = 50' HORIZ.
1" = 5' VERT.

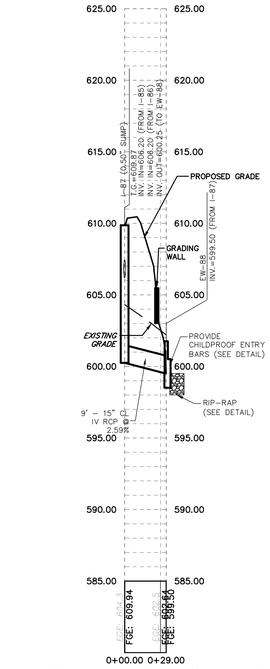

PROFILE: I-87 TO EW-88

SCALE: 1" = 50' HORIZ.
1" = 5' VERT.

NOTES:
1. ALL CROSSED OUT TEXT IS NOW AS-BUILT AS PRIOR PHASE UTILITIES ARE INSTALLED.
2. A MINIMUM VERTICAL SEPARATION OF 18" SHALL BE MAINTAINED FROM OTHER UTILITIES TO THE WATER MAIN.

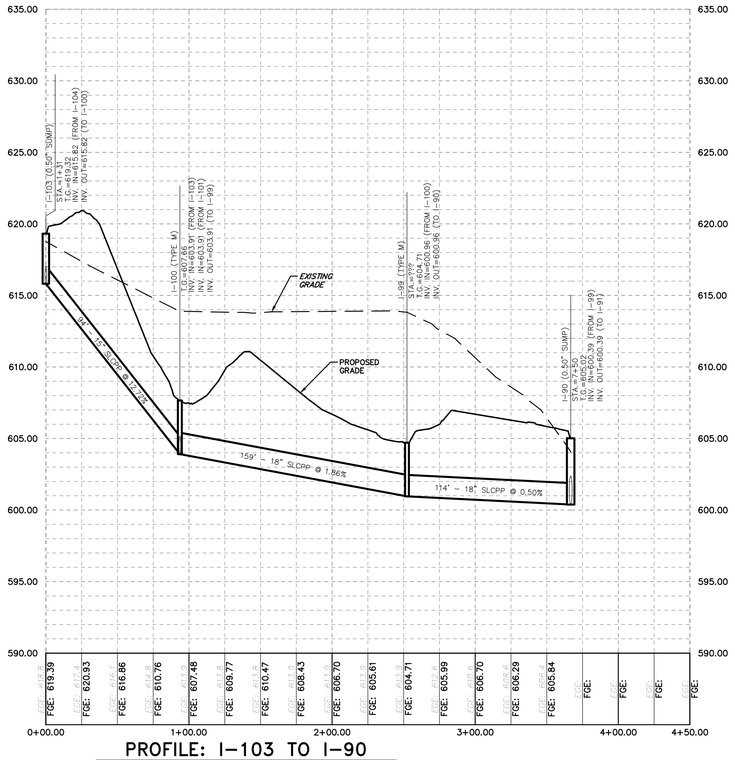

PROFILE: I-103 TO I-90

SCALE: 1" = 50' HORIZ.
1" = 5' VERT.

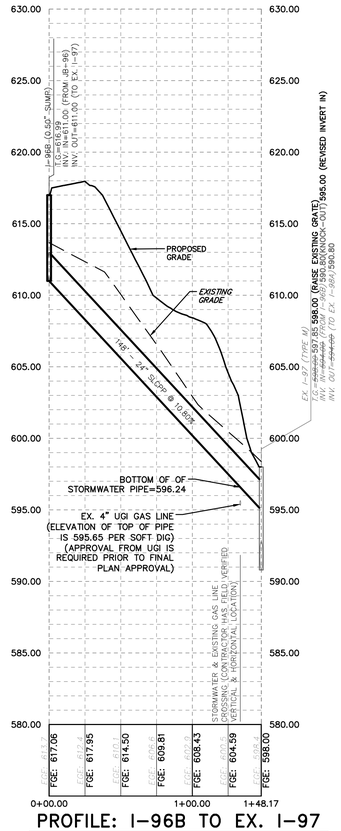

PROFILE: I-96B TO EX. I-97

SCALE: 1" = 50' HORIZ.
1" = 5' VERT.

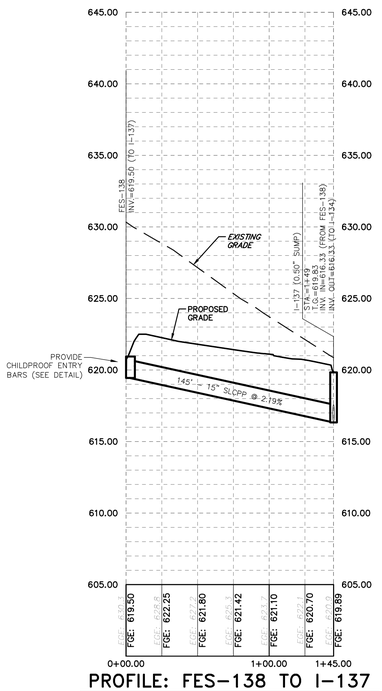

PROFILE: FES-138 TO I-137

SCALE: 1" = 50' HORIZ.
1" = 5' VERT.

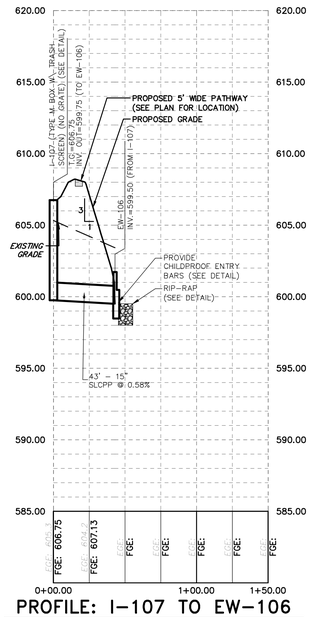

PROFILE: I-107 TO EW-106

SCALE: 1" = 50' HORIZ.
1" = 5' VERT.

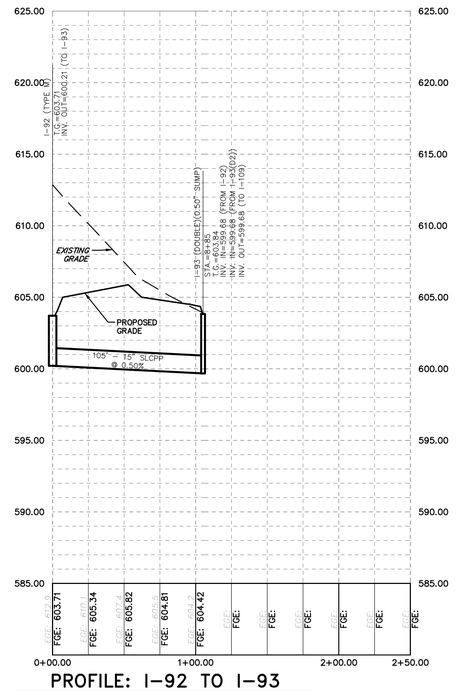

PROFILE: I-92 TO I-93

SCALE: 1" = 50' HORIZ.
1" = 5' VERT.

NO.	DATE	REVISION
2	4-25-22	REVISED PER N.T. LEB. CO. ENGINEER & CITY OF LEB. AUTHORITY
1	2-1-22	REVISED PER N.T. LEB. CO. ENGINEER, LCPD, NLTMA, & CITY OF LEB. AUTHORITY

FOR PIONEER MANAGEMENT BY:

MANAGER: JAMES C. HENKE	SURV. CHIEF: RC
DESIGN BY: JDB/KWG	DRAWN BY: RC
CHKD BY: JDB/JCH	CHKD BY: RC
FIELDBOOK NO. VALUE	

DRAWING REFERENCE:
X:\12\12-0950-02\CAD\Final Plan\Profiles.dwg

XREFS:
Ttl: [F:\12\12-0950-02\CAD\Final Plan\Ttl-web.TB.dwg]
Base: [F:\12\12-0950-02\CAD\Final Plan\X-Base-Plan.dwg]
X-Base: [F:\12\12-0950-02\CAD\Final Plan\X-Base.dwg]
Base-Block: [F:\12\12-0950-02\CAD\Final Plan\X-Base-Block.dwg]
Ph1-Ph3-Block: [F:\12\12-0950-02\CAD\Final Plan\X-Ph1-Ph3-Block.dwg]
Ph2-Ph3-Block: [F:\12\12-0950-02\CAD\Final Plan\X-Ph2-Ph3-Block.dwg]
Ph2-Ph3-Block-N-LNM: [F:\12\12-0950-02\CAD\Final Plan\X-Ph2-Ph3-Block-N-LNM.dwg]
Ph2-Ph3-Block-N-LNM-2: [F:\12\12-0950-02\CAD\Final Plan\X-Ph2-Ph3-Block-N-LNM-2.dwg]

CLIENT
LANDMARK HOMES AT SWEETBRIAR
c/o MR. CLIFF WEAVER
1737 WEST MAIN STREET
EPHRATA, PA 17522
(717) 733-1536

SCALE: 1" = 50'
0 25' 50' 100' 150'

PIONEER
Management, LLC
111 Millersville Road, Lancaster, PA 17603
Phone: (717) 435-8305 Fax: (717) 481-4955
Email: jh@pioneermanagementllc.com
Website: www.pioneermanagementllc.com

MISCELLANEOUS OVERLAND PROFILES
FINAL PHASE 4 & REVISED FINAL
PHASE 3 SUBDIVISION PLAN
FOR
THE CROSSINGS AT SWEET BRIAR
NORTH LEBANON TOWNSHIP LEBANON COUNTY, PA

DATE: JUNE 25, 2021
SHEET NO. 34 OF 43
DWG. NO. 12-0950-02-F

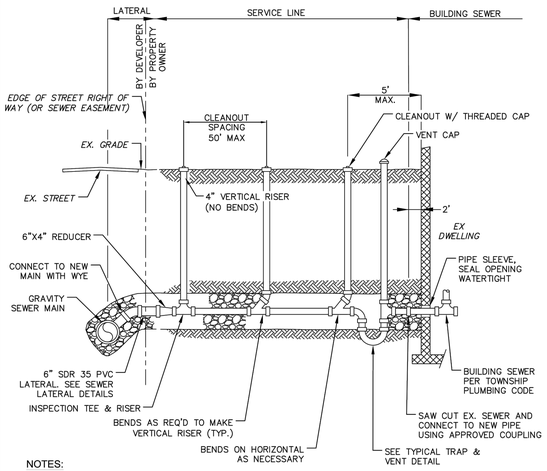

NOTES:

1 PROVIDE 6" OF AASHTO NO. 8 (1B) STONE BELOW PIPE AND 12" ABOVE PIPE (TYPICAL ENTIRE LENGTH OF LATERAL)

2 MINIMUM SLOPE 1% (1/8" PER FT)

3 MINIMUM DEPTH OF COVER = 4 FT

4 PIPE MATERIALS:
SERVICE LINE - PVC SDR 35 (PUSH-ON JOINTS)
- PVC SCH 40, SOLVENT WELD

5 NO SEWER SERVICE LINE VENT CAPS SHALL BE INSTALLED WITHIN A 100 YEAR FLOOD PLAIN OR WITHIN FLOOD PRONE AREAS.

6 NO VENT CAPS OR CLEANOUTS SHALL BE INSTALLED IN DRIVEWAYS OR OTHER PAVED AREAS UNLESS SPECIFICALLY APPROVED BY NLTMA.

GRAVITY SERVICE LINE INSTALLATION
NOT TO SCALE

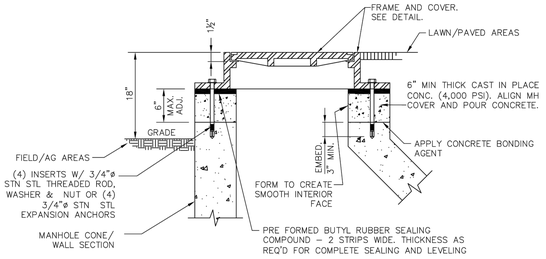

OPTION 1 – CAST–IN–PLACE CONCRETE RISER

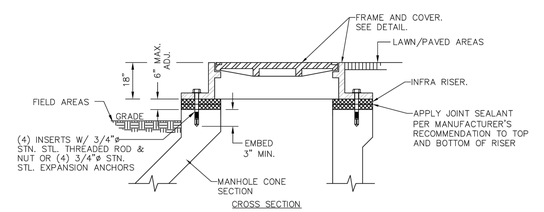

OPTION 2 – RUBBER RISERS

NOTES:
1. CONTRACTOR HAS OPTION TO PROVIDE ANY OF THE OPTIONS INDICATED.
2. TAPER GRADE RINGS TO MATCH ROAD PROFILE IN PAVED AREAS.

MANHOLE GRADE RINGS
NOT TO SCALE

NOTES:
1. PRECAST REINFORCED CONCRETE MANHOLES SHALL CONFORM TO A.S.T.M. SPEC. C–478.
2. STEEL REINFORCEMENT SHALL BE GRADE 60 PER ASTM A–615.
3. IF INCOMING INVERT EXCEEDS OUTGOING INVERT BY GREATER THAN OR EQUAL TO 12", SEE INSIDE SPLASH/ INSIDE DROP MANHOLE DETAILS.
4. FOR MANHOLES WHERE TOP OF RIM TO INVERT DISTANCE IS LESS THAN 5'–0", USE FLAT TOP MANHOLE IN LIEU OF CONE TOP.
5. FILL ALL LIFTING HOLES WITH NON–SHRINK GROUT.
6. 5' DIA MANHOLE REQUIRED ON INSIDE DROP. SEE INSIDE DROP MH DETAIL FOR ADDITIONAL DETAILS.
7. ALL MANHOLE HARDWARE SHALL BE STN STL.

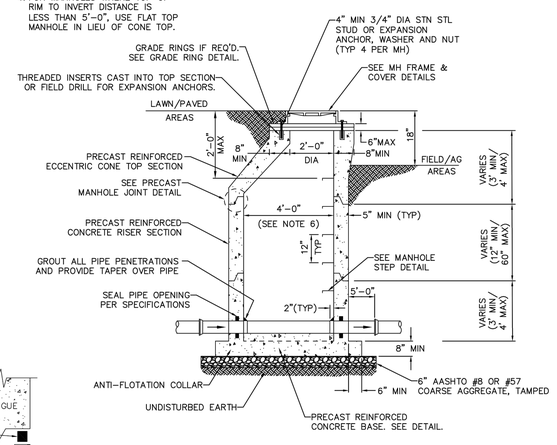

PRECAST CONCRETE MANHOLE
NOT TO SCALE

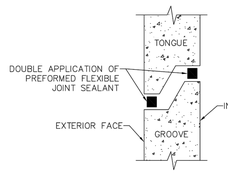

PRECAST MANHOLE JOINT
NOT TO SCALE

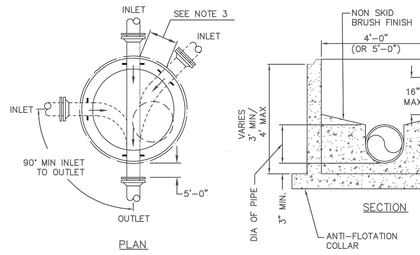

NOTES

1. THREE INLET PIPES AND ONE OUTLET PIPE MAX INTO 4' DIA. MANHOLE.
2. NO LATERALS INTO MANHOLES, UNLESS AUTHORIZED OTHERWISE BY NLTMA.
3. MINIMUM 12" SEPARATION FROM EDGE OF PIPE PENETRATION TO EDGE OF PIPE PENETRATION.
4. MINIMUM CHANNEL DROP THROUGH MANHOLE:
   STRAIGHT THROUGH – 0.1 FEET
   BEND – 0.2 FEET
5. ALL CHANNELS SHALL BE PRECAST UNLESS APPROVED OTHERWISE BY NLTMA.
6. THESE DETAILS APPLY TO PRECAST CHANNELS IN NEW MANHOLES AND FIELD–FORMED CHANNELS IN EXISTING MANHOLES.
7. CHANNELS SHALL MATCH THE CROSS–SECTIONAL DIMENSIONS OF THE PIPES ENTERING AND EXITING THE MANHOLE. SMOOTH TRANSITIONS SHALL BE PROVIDED BETWEEN CHANGES IN PIPE SIZE.
8. 4'–0" DIA. UNLESS PIPING CONFIGURATION REQUIRES LARGER.
9. MIN. DEPTH OF CHANNEL SHALL MATCH DIAMETER OF LARGEST PIPE ENTERING MANHOLE.

PRECAST MANHOLE BASE
NOT TO SCALE

NOTES:

1. PROVIDE 6" OF AASHTO NO. 8 (1B) STONE BELOW PIPE AND 12" ABOVE PIPE. (TYPICAL ENTIRE LENGTH OF LATERAL.
2. MINIMUM SLOPE = 1% (1/8" PER FOOT)
3. MINIMUM DEPTH OF COVER = 4 FT
4. DEVELOPER SHALL TEST AGAINST 6" SDR 35 GASKETED CAP OR PLUG.
5. LATERAL TO EXTEND 12" BEYOND R.O.W. OR EASEMENT OR AS APPROVED OTHERWISE BY NLTMA.
6. LABEL STAKE AS "SEWER LATERAL". NOTE LATERAL DEPTH AT EDGE OF R.O.W. OR EASEMENT.

SEWER LATERAL INSTALLATION
NOT TO SCALE

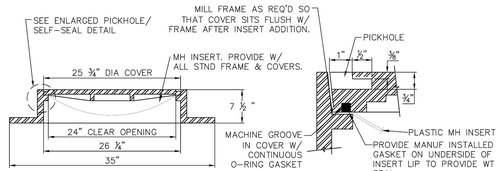

NOTES:
1. CAST IRON MEETS ASTM SPEC A–48 CLASS 35B, AASHTO HIGHWAY LOADING HS–20 EQUIVALENT TO NEENAH FOUNDRY COMPANY MODEL R–1643.
2. LOW PROFILE FRAME AND COVERS SHALL ONLY BE USED FOLLOWING APPROVAL BY NLTMA DUE TO RISER ADJUSTMENT LIMITATIONS.
3. APPLY ANTI–SEIZE COMPOUND TO ALL THREADED SURFACES.
4. LETTERING FOR PRIVATE MANHOLES SHALL BE "PRIVATE SEWER".

STANDARD MANHOLE FRAME & COVER
NOT TO SCALE

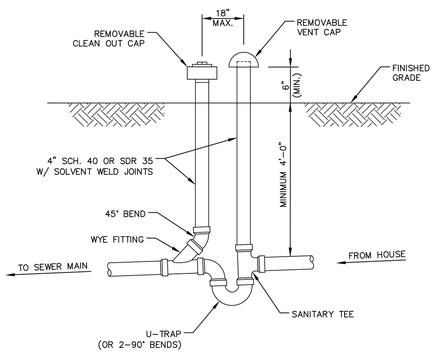

TYPICAL TRAP & VENT ASSEMBLY
NOT TO SCALE

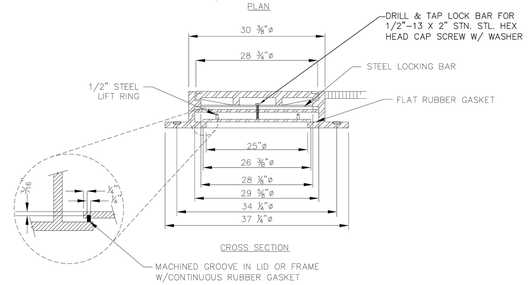

NOTES:
1. CAST IRON MEETS ASTM SPEC A–48 CLASS 35B, AASHTO HIGHWAY LOADING HS–20.
2. APPROVED MANUFACTURER: NEENAH FOUNDRY COMPANY MODEL R–1755. NO SUBSTITUTIONS ALLOWED UNLESS OTHERWISE APPROVED BY NLTMA.
3. APPLY ANTI–SEIZE COMPOUND TO ALL THREADED SURFACES.
4. LETTERING FOR PRIVATE MANHOLES SHALL BE "PRIVATE SEWER".

WATERTIGHT MANHOLE FRAME & COVER
NOT TO SCALE

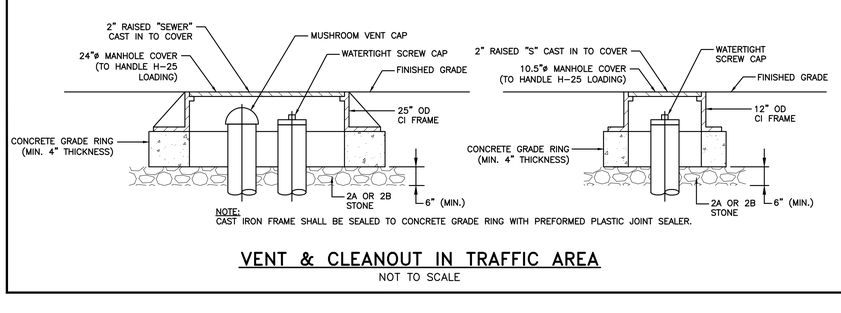

NOTE:
CAST IRON FRAME SHALL BE SEALED TO CONCRETE GRADE RING WITH PREFORMED PLASTIC JOINT SEALER.

VENT & CLEANOUT IN TRAFFIC AREA
NOT TO SCALE

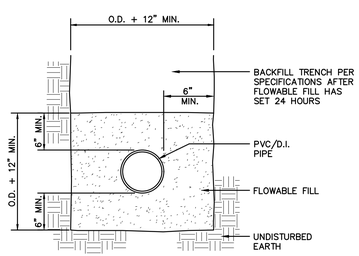

CONCRETE ENCASEMENT DETAIL
NOT TO SCALE

NO.	DATE	REVISION
2	4–25–22	REVISED PER NLT, LEB. CO. ENGINEER & CITY OF LEB. AUTHORITY
1	2–1–22	REVISED PER NLT, LEB. CO. ENGINEER, LCPD, NLTMA, & CITY OF LEB. AUTHORITY

FOR PIONEER MANAGEMENT BY:

FIELDBOOK NO. VALUE | CHKD BY: RC | DRAWN BY: RC | SURV. CHIEF: RC

MANAGER: JAMES C. HENKE | DESIGN BY: JDB/KWG | CHKD BY: JDB/JCH

DRAWING REFERENCE: X:\12\12–0950–02\CAD\Xrefs–PHA\Details.dwg

XREFS: TB [F:\12\12–0950–02\CAD\Xrefs–PHA\X–refs\TB.dwg]

CLIENT
LANDMARK HOMES AT SWEETBRIAR
c/o MR. CLIFF WEAVER
1737 WEST MAIN STREET
EPHRATA, PA 17522
(717) 733–1536

SCALE: AS NOTED

PIONEER Management, LLC
711 Millersville Road, Lancaster, PA 17603
(717) 481–4500 Fax: (717) 481–4955
Email: jh@pioneermanagementllc.com
Website: www.pioneermanagementllc.com

SANITARY SEWER DETAILS
FINAL PHASE 4 & REVISED FINAL PHASE 3 SUBDIVISION PLAN
FOR
THE CROSSINGS AT SWEET BRIAR
NORTH LEBANON TOWNSHIP LEBANON COUNTY, PA

DATE: JUNE 25, 2021

SHEET NO. 35 OF 43

DWG. NO. 12–0950–02–F

F:\12\12-0950-02\CAD\Final-Ph4\Details.dwg, 36 SANITARY SEWER DETAILS, 6/7/2021 2:27:41 PM, 1:1

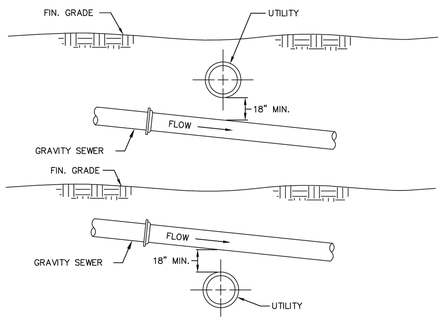

NOTE: MAINTAIN SLOPE OF PROPOSED SEWER AT ALL CROSSINGS.

GRAVITY SEWER CROSSING UTILITIES
NOT TO SCALE

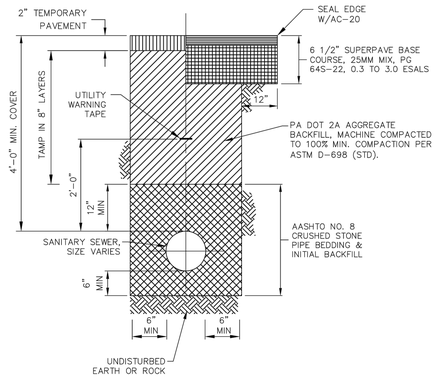

TRENCH RESTORATION (EXISTING PAVED AREAS)
NOT TO SCALE

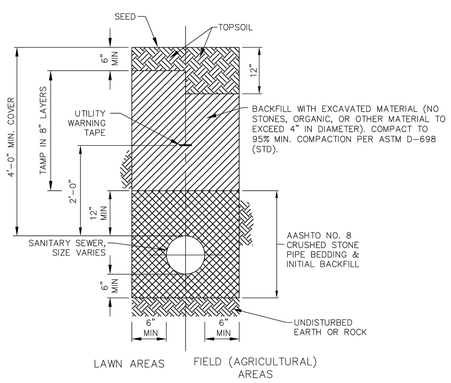

TRENCH RESTORATION (LAWN/FIELD AREAS)
NOT TO SCALE

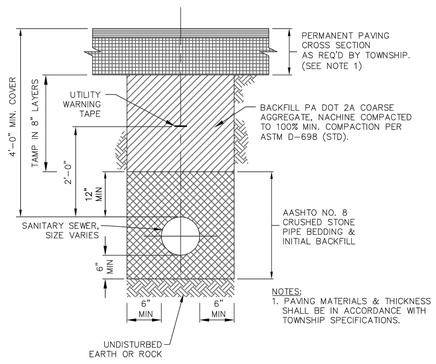

TRENCH RESTORATION (NEW ROADWAY)
NOT TO SCALE

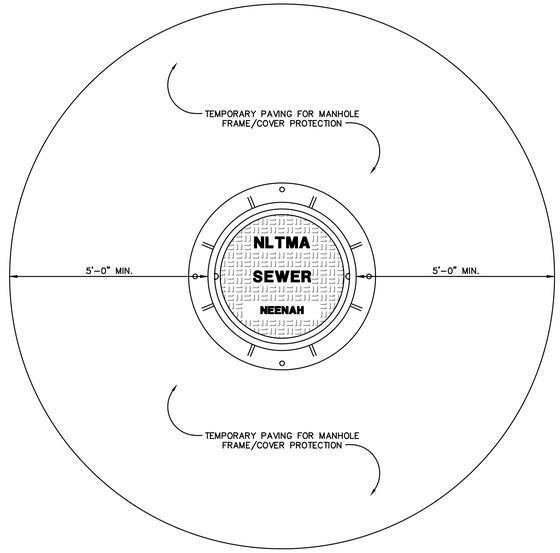

PLAN

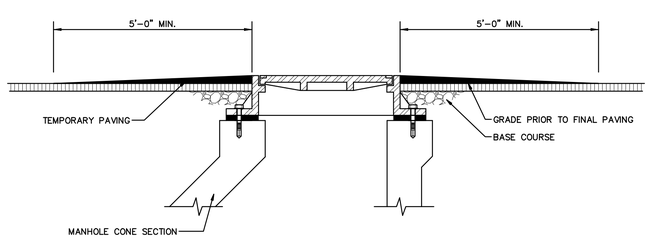

CROSS SECTION

MANHOLE FRAME & COVER PROTECTION PRIOR TO FINAL PAVING
NOT TO SCALE

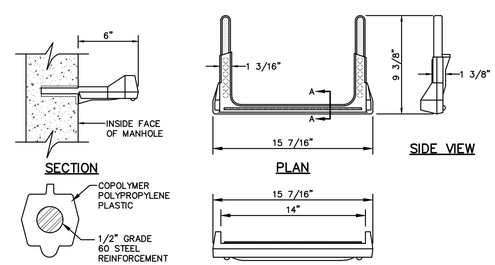

POLYPROPYLENE MANHOLE STEP DETAIL
NOT TO SCALE

NO.	DATE	REVISION
2	4-25-22	REVISED PER NLT, LEB. CO. ENGINEER & CITY OF LEB. AUTHORITY
1	2-1-22	REVISED PER NLT, LEB. CO. ENGINEER, LCPD, NLTMA, & CITY OF LEB. AUTHORITY

FOR PIONEER MANAGEMENT BY:

MANAGER: JAMES C. HENKE
DESIGN BY: JDB/KWG
DRAWING REFERENCE: F:\12\12-0950-02\CAD\Xrefs-Ph4\Details.dwg
XREFS: TB [F:\12\12-0950-02\CAD\Final-Ph4\X-refs\TB.dwg]

SURV. CHIEF: RC
DRAWN BY: RC
CHKD BY: RC
FIELDBOOK NO. VALUE

CLIENT
LANDMARK HOMES AT SWEETBRIAR
c/o MR. CLIFF WEAVER
1737 WEST MAIN STREET
EPHRATA, PA 17522
(717) 733-1536

SCALE: AS NOTED

PIONEER Management, LLC
111 Millersville Road, Lancaster, PA 17603
Phone: (717) 481-8500 Fax: (717) 481-4955
Email: jrb@pioneermanagementllc.com
Website: www.pioneermanagementllc.com

SANITARY SEWER DETAILS
FINAL PHASE 4 & REVISED FINAL PHASE 3 SUBDIVISION PLAN
FOR
THE CROSSINGS AT SWEET BRIAR
NORTH LEBANON TOWNSHIP LEBANON COUNTY, PA.

DATE: JUNE 25, 2021
SHEET NO. 36 OF 43
DWG. NO. 12-0950-02-F

F:\12\12-0950-02\CAD\Final-Ph4\Details.dwg, 37 WATERLINE DETAILS, 6/7/2022 2:27:43 PM, 1:1

NOTES:
SECTION 114 – FIRE HYDRANT MARKERS

1. IT SHALL BE THE RESPONSIBILITY OF THE DEVELOPER TO PURCHASE AND INSTALL FIRE HYDRANT MARKERS FOR ALL NEWLY INSTALLED FIRE HYDRANTS PER TOWNSHIP REQUIREMENTS.
2. SPRING–EQUIPPED FIRE HYDRANT MARKERS shall be 5' IN HEIGHT WITH 3/8" DIAMETER MARKER POLE WITH REFLECTIVE RED/WHITE STRIPING. MARKER MUST BE CORROSION RESISTANT AND HAVE HIGH VISIBILITY AND BEND STRENGTH. MIL–SPEC STEEL "L–BRACKET" WITH POLYURETHANE COATING FOR HYDRANT FLANGE BOLT MOUNTING. MARKERS CAN BE PURCHASED FROM TOWNSHIP STOCK OR DEVELOPER CAN PROVIDE MARKER OF EQUAL QUALITY, AS APPROVED BY THE TOWNSHIP ROADMASTER.
3. HYDRANTS AT INTERSECTIONS OR OTHER CRITICAL AREAS SHALL INCLUDE A 4" X 5" MINI FLAG, WHICH IS MADE OF WHITE UV–PROTECTED, EXTERIOR GRADE PVC AND STRIPED WITH RED REFLECTIVE TAPE. MINI FLAGS MOUNT TO THE 3/8" MARKER POLES USING AN INTEGRAL SCREW–TIGHTENING CLAMP.

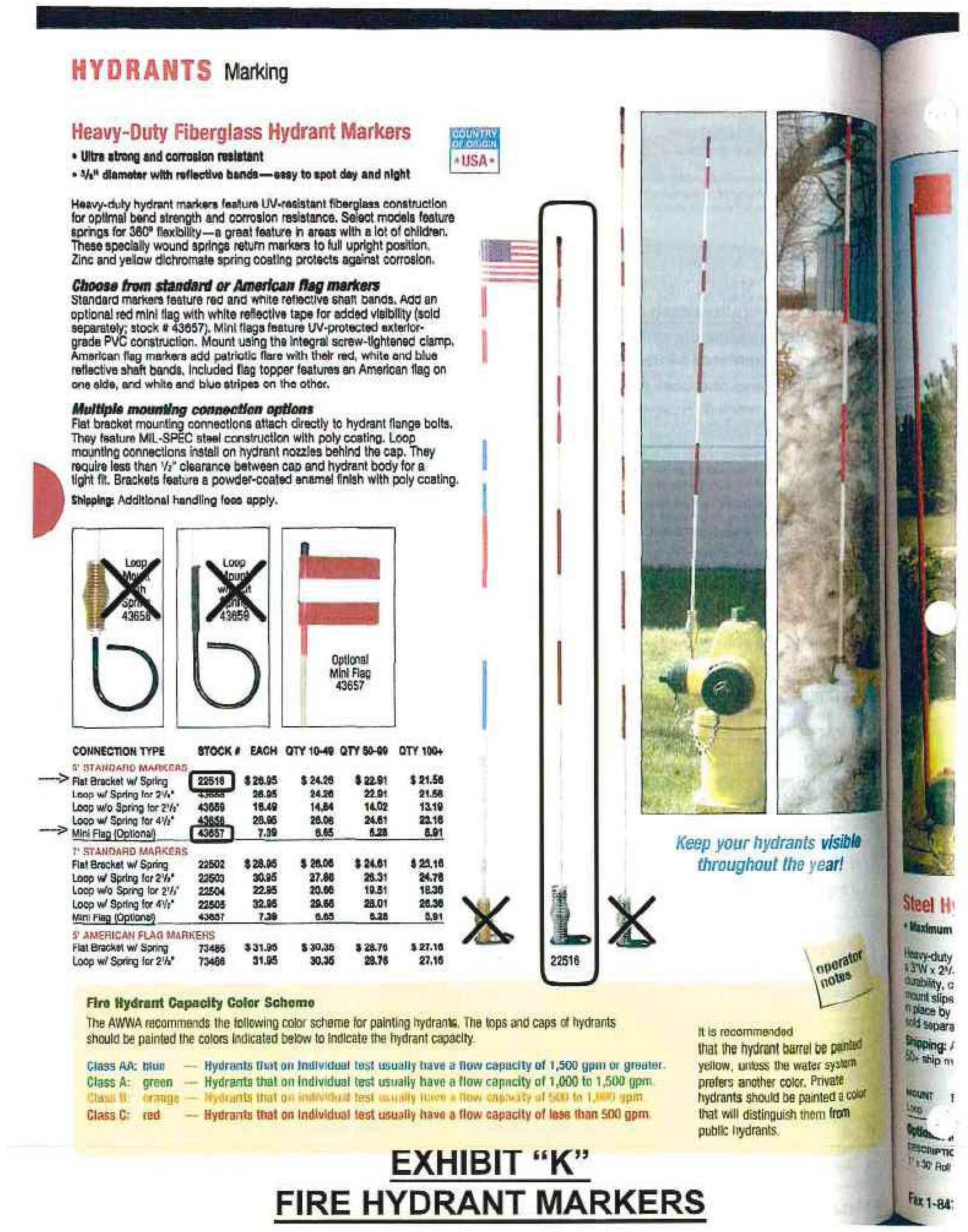

HYDRANTS Marking

Heavy-Duty Fiberglass Hydrant Markers

- Ultra strong and corrosion resistant
- 3/8" diameter with reflective bands—easy to spot day and night

COUNTRY OF ORIGIN •USA•

Heavy-duty hydrant markers feature UV-resistant fiberglass construction for optimal bend strength and corrosion resistance. Select models feature springs for 360° flexibility—a great feature in areas with a lot of children. These specially wound springs return markers to full upright position. Zinc and yellow dichromate spring coating protects against corrosion.

Choose from standard or American flag markers
Standard markers feature red and white reflective shaft bands. Add an optional red mini flag with white reflective tape for added visibility (sold separately; stock # 43657). Mini flags feature UV-protected exterior-grade PVC construction. Mount using the integral screw-tightened clamp. American flag markers add patriotic flare with their red, white and blue reflective shaft bands. Included flag topper features an American flag on one side, and white and blue stripes on the other.

Multiple mounting connection options
Flat bracket mounting connections attach directly to hydrant flange bolts. They feature MIL-SPEC steel construction with poly coating. Loop mounting connections install on hydrant nozzles behind the cap. They require less than 1/2" clearance between cap and hydrant body for a tight fit. Brackets feature a powder-coated enamel finish with poly coating.
Shipping: Additional handling fees apply.

Loop Mount with Spring 43658 — Loop Mount with Spring 43659 — Optional Mini Flag 43657

CONNECTION TYPE	STOCK #	EACH	QTY 10-49	QTY 50-99	QTY 100+
5' STANDARD MARKERS					
Flat Bracket w/ Spring	22518	$ 26.95	$ 24.26	$ 22.91	$ 21.56
Loop w/ Spring for 2¼"	43658	26.95	24.26	22.91	21.56
Loop w/o Spring for 2½"	43659	16.49	14.84	14.02	13.19
Loop w/ Spring for 4½"	43656	26.95	26.06	24.61	23.16
Mini Flag (Optional)	43657	7.39	6.65	6.28	5.91
7' STANDARD MARKERS					
Flat Bracket w/ Spring	22502	$ 28.95	$ 26.06	$ 24.61	$ 23.16
Loop w/ Spring for 2½"	22503	30.95	27.86	26.31	24.76
Loop w/o Spring for 2½"	22504	22.95	20.66	19.51	18.36
Loop w/ Spring for 4½"	22505	32.95	29.66	28.01	26.36
Mini Flag (Optional)	43657	7.39	6.65	6.28	5.91
5' AMERICAN FLAG MARKERS					
Flat Bracket w/ Spring	73485	$ 31.95	$ 30.35	$ 28.76	$ 27.16
Loop w/ Spring for 2½"	73486	31.95	30.35	28.76	27.16

22516

Keep your hydrants visible throughout the year!

Fire Hydrant Capacity Color Scheme
The AWWA recommends the following color scheme for painting hydrants. The tops and caps of hydrants should be painted the colors indicated below to indicate the hydrant capacity.

Class AA: blue — Hydrants that on individual test usually have a flow capacity of 1,500 gpm or greater.
Class A: green — Hydrants that on individual test usually have a flow capacity of 1,000 to 1,500 gpm.
Class B: orange — Hydrants that on individual test usually have a flow capacity of 500 to 1,000 gpm.
Class C: red — Hydrants that on individual test usually have a flow capacity of less than 500 gpm.

It is recommended that the hydrant barrel be painted yellow, unless the water system prefers another color. Private hydrants should be painted a color that will distinguish them from public hydrants.

operator notes

Steel H… • Maximum …

Fax 1-84…

EXHIBIT "K"
FIRE HYDRANT MARKERS

FIRE HYDRANT MARKER
NOT TO SCALE

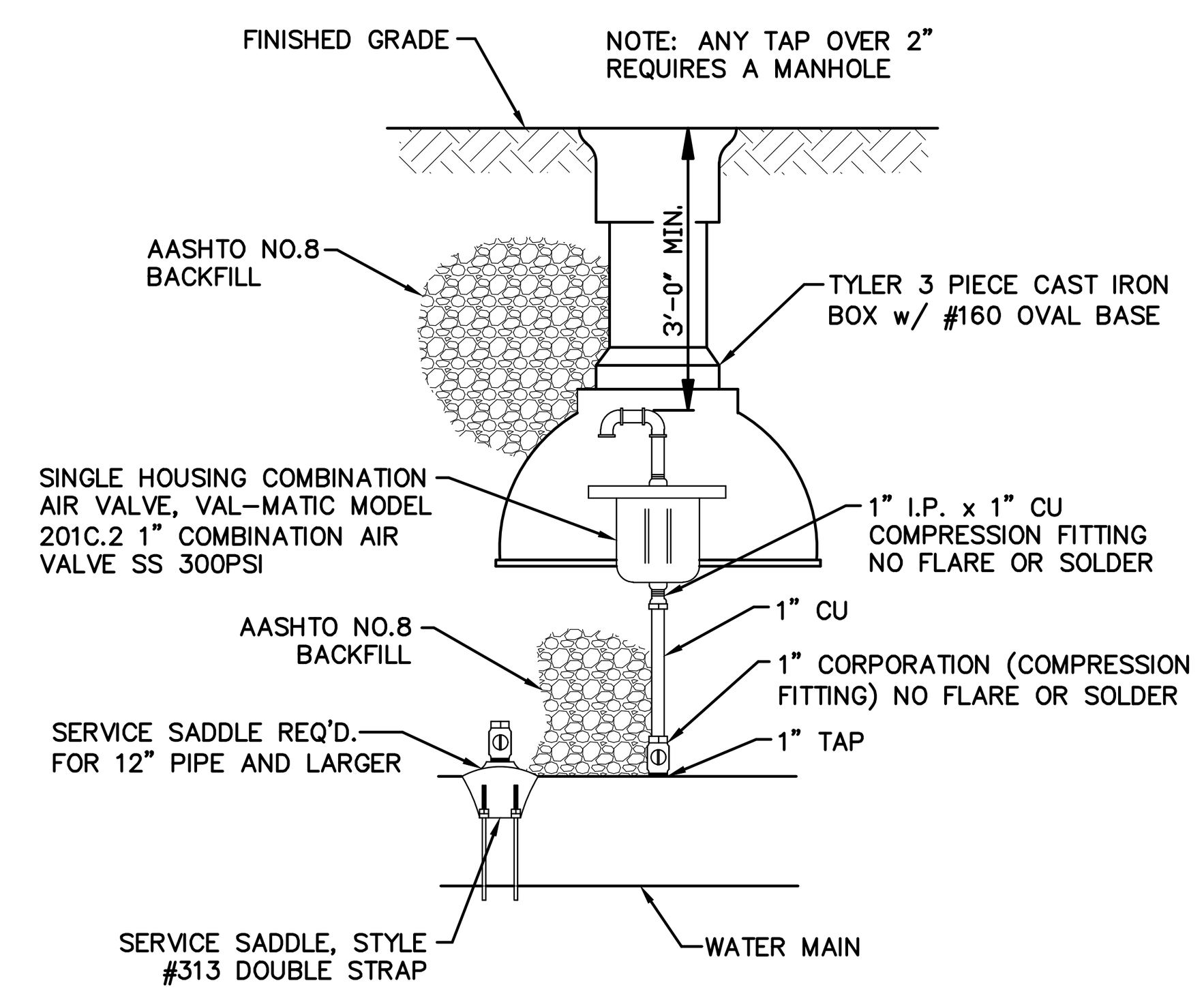

1" AIR VALVE DETAIL
NOT TO SCALE

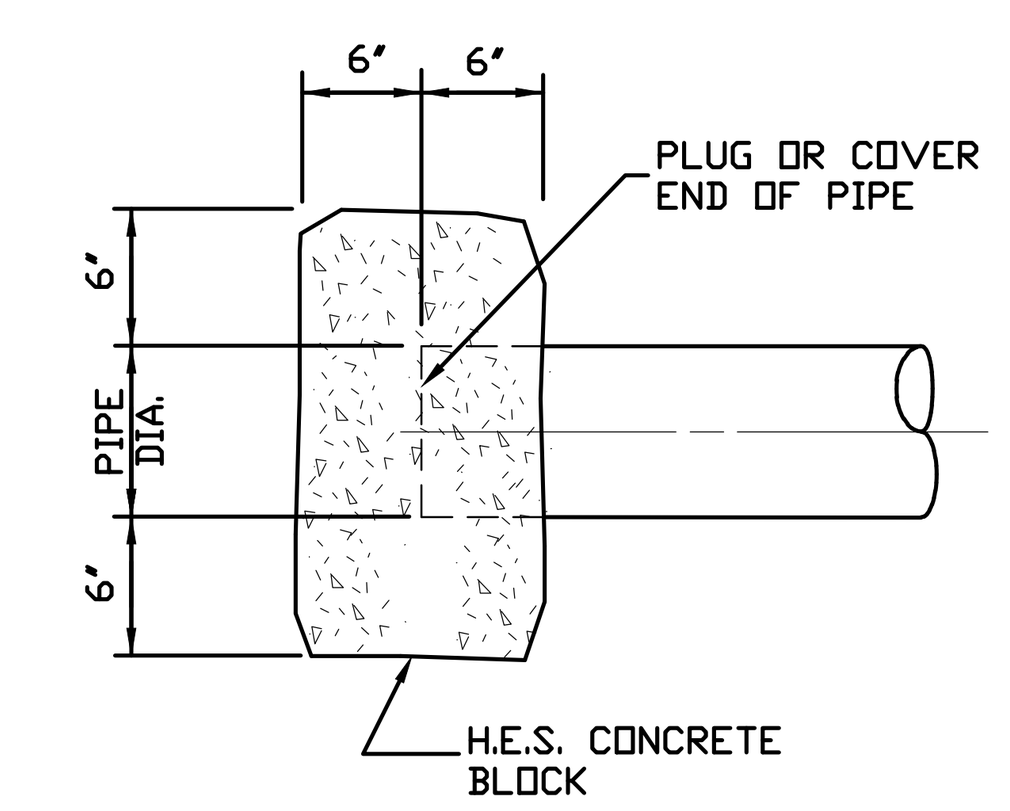

CUT AND PLUG
NOT TO SCALE

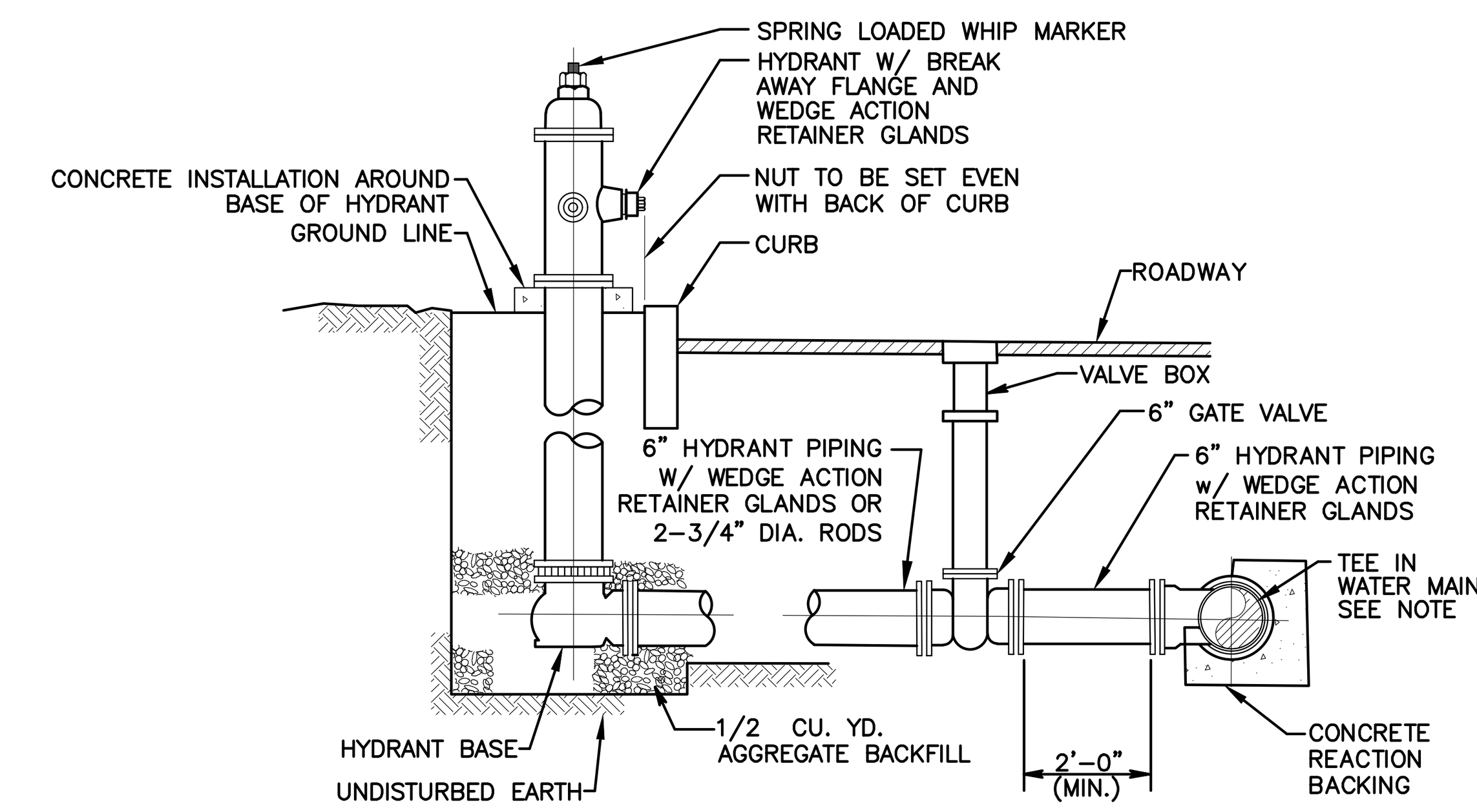

NOTES:
1. WRAP FITTING W/ POLYETHYLENE WRAP PRIOR TO CONCRETE WORK.
2. HYDRANT PAINT SCHEME IS TO BE A SILVER BODY WITH YELLOW DOME AND YELLOW CAPS (NO CHAINS).

HYDRANT DETAIL AT CURB
NOT TO SCALE

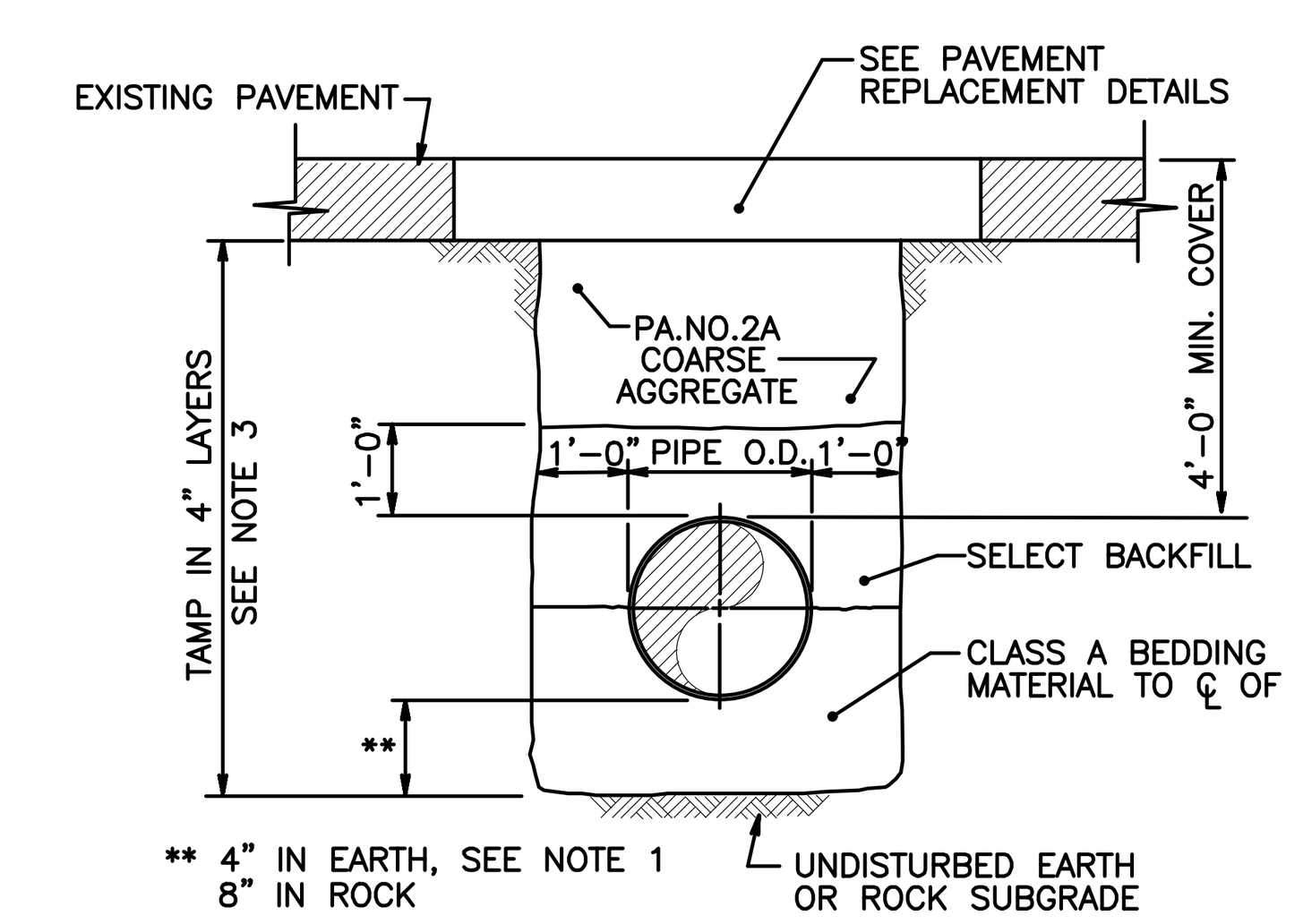

NOTES:
1. IF UNSUITABLE SUBSOIL IS ENCOUNTERED AT THE NORMAL TRENCH SUBGRADE, THE CONTRACTOR SHALL REMOVE IT TO THE DEPTH DIRECTED BY THE ENGINEER IN THE FIELD, AND BACKFILL w/ CLASS A BEDDING IN 4" LAYERS.
2. BOTTOM OF TRENCH SHALL BE FREE OF WATER PRIOR TO WATER MAIN INSTALLATION.
3. IF VIBRATORY COMPACTION EQUIPMENT IS USED BACKFILL MAY BE IN 8" LAYERS.
4. PROVIDE 4" OF TOPSOIL WHERE SEEDING IS REQUIRED. SEE NOTE 6 AT GRAVEL DRIVEWAYS.
5. CONTRACTOR SHALL SHORE THE TRENCH IN ACCORDANCE WITH SECTION 02151 OF THE SPECIFICATIONS.
6. GRAVEL AND PAVED DRIVEWAYS TO BE RESTORED IN KIND.
7. CONTRACTOR MAY SUBSTITUTE PA NO. 2A FOR CLASS A BEDDING AT NO INCREASED COST TO THE OWNER WITH WRITTEN PERMISSION FROM THE ENGINEER OR OWNER. FOR DESCRIPTION OF BACKFILL MATERIAL, SEE SPECIFICATION SECTION 02221.
8. ALL PAVING RESTORATION TO BE IN ACCORDANCE WITH PennDOT PUB. 408/2003 AND PUB. 72M.

TYPICAL TRENCH (PAVED AREAS)
NOT TO SCALE

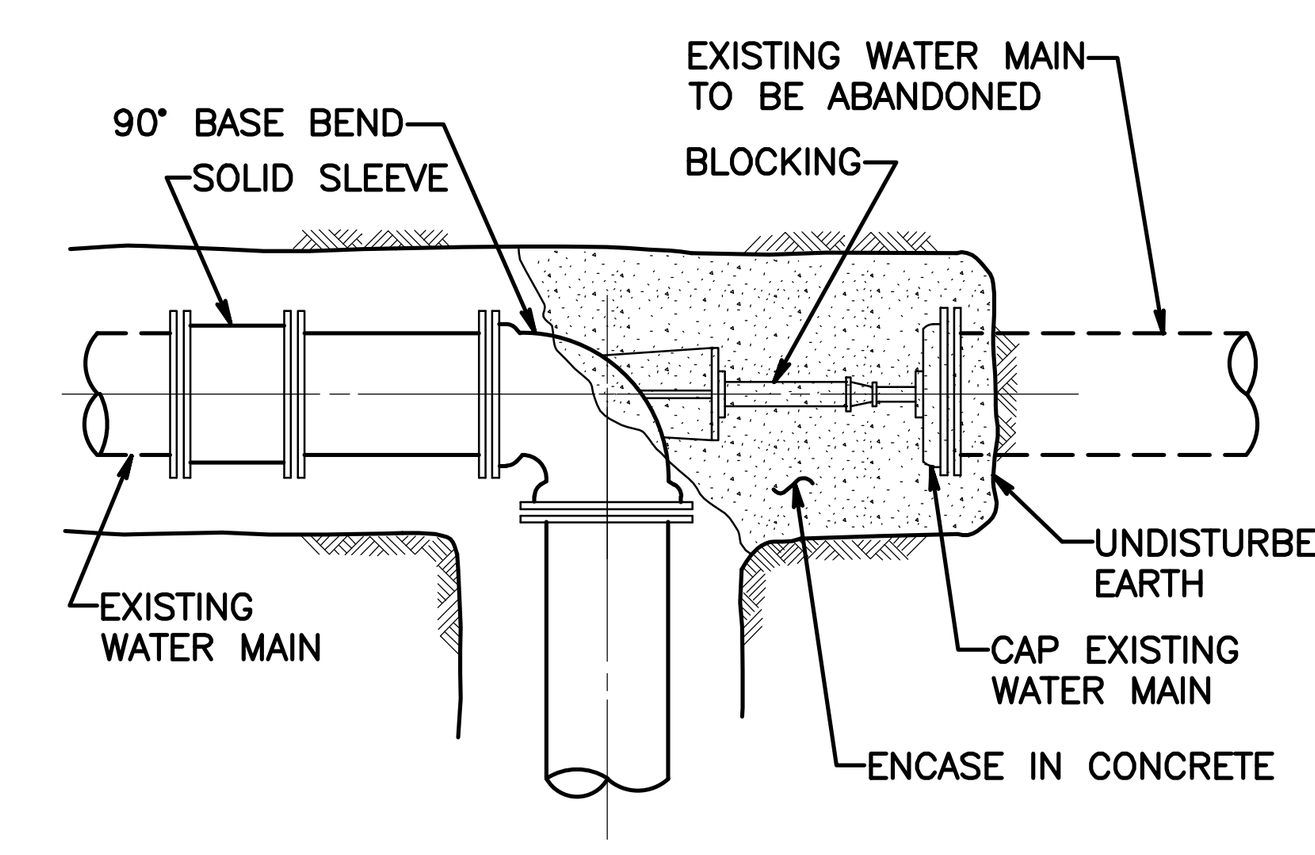

CUTTING–IN CONNECTION DETAIL
NOT TO SCALE

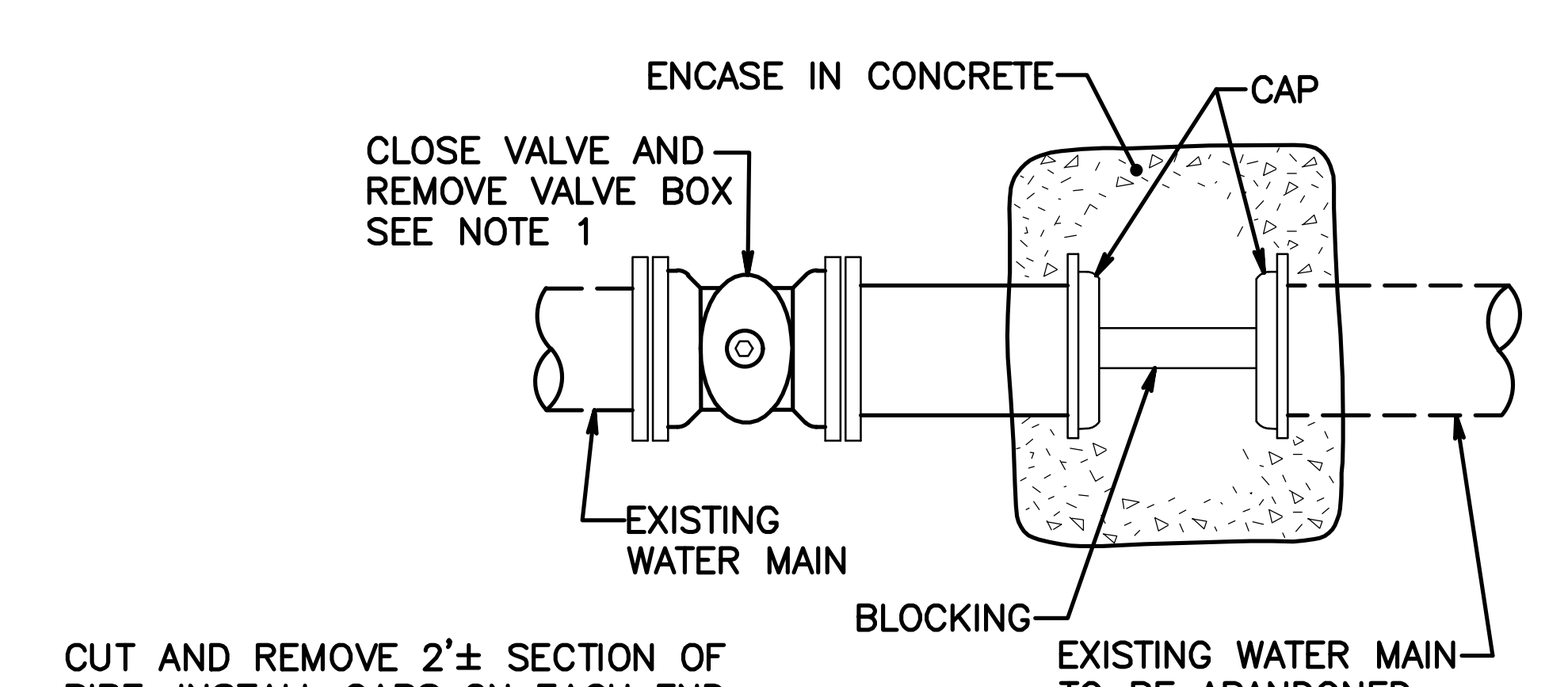

CUT AND REMOVE 2'± SECTION OF PIPE. INSTALL CAPS ON EACH END, BLOCK AND WEDGE BETWEEN AND ENCASE WITH CONCRETE.

DETAIL A

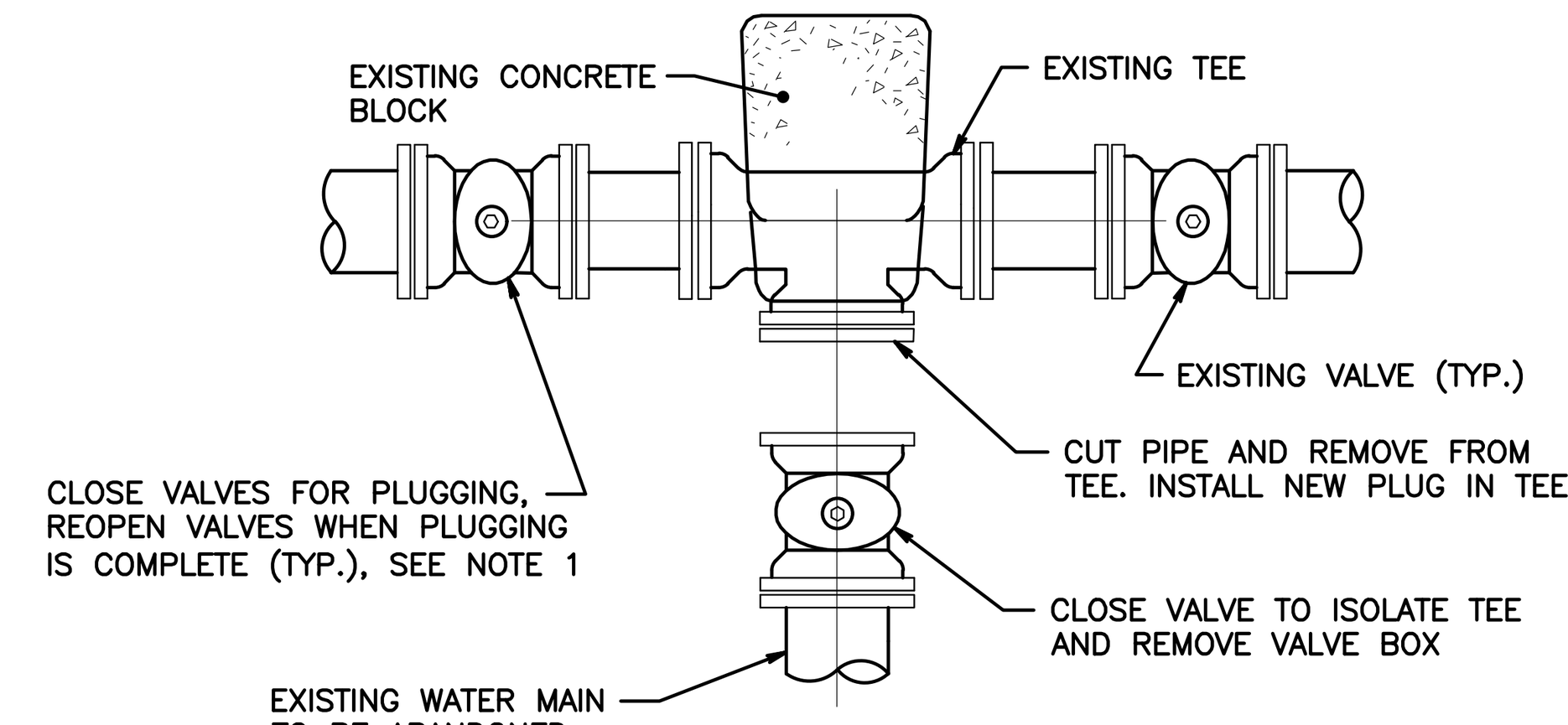

DETAIL B

NOTE: VALVES TO BE OPERATED BY AUTHORITY PERSONNEL ONLY.

CUTTING, CAPPING AND BLOCKING DETAILS
NOT TO SCALE

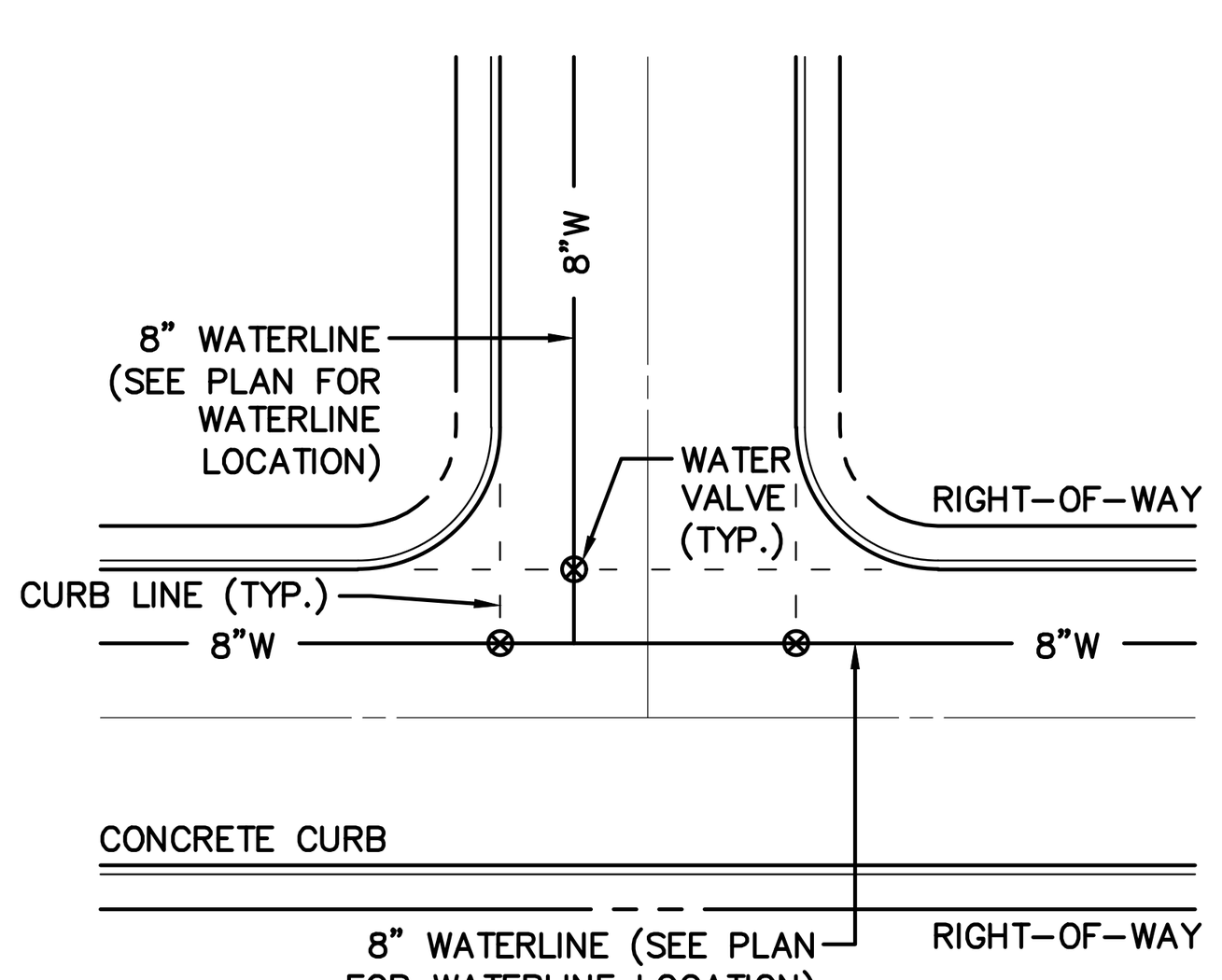

LOCATION OF WATER VALVES PER CITY OF LEBANON AUTHORITY CRITERIA
NOT TO SCALE

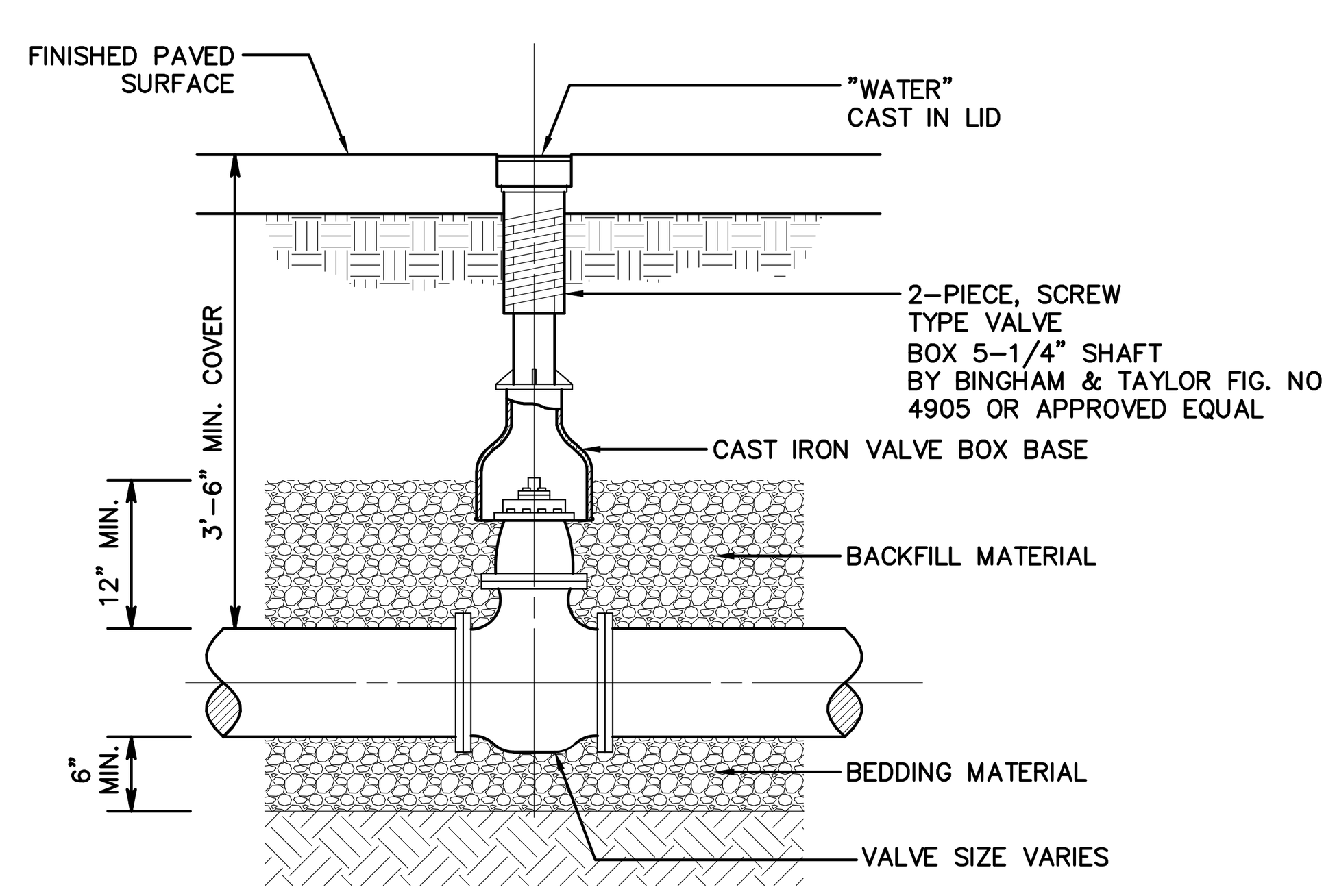

NOTE: VALVE BOX BASES TO BE:
NO. 4 DOME – VALVES 4" AND SMALLER
NO. 6 ROUND – 6" AND 8" VALVES
NO. 160 OVAL – 10" TO 16" VALVES

GATE VALVE INSTALLATION DETAIL
NOT TO SCALE

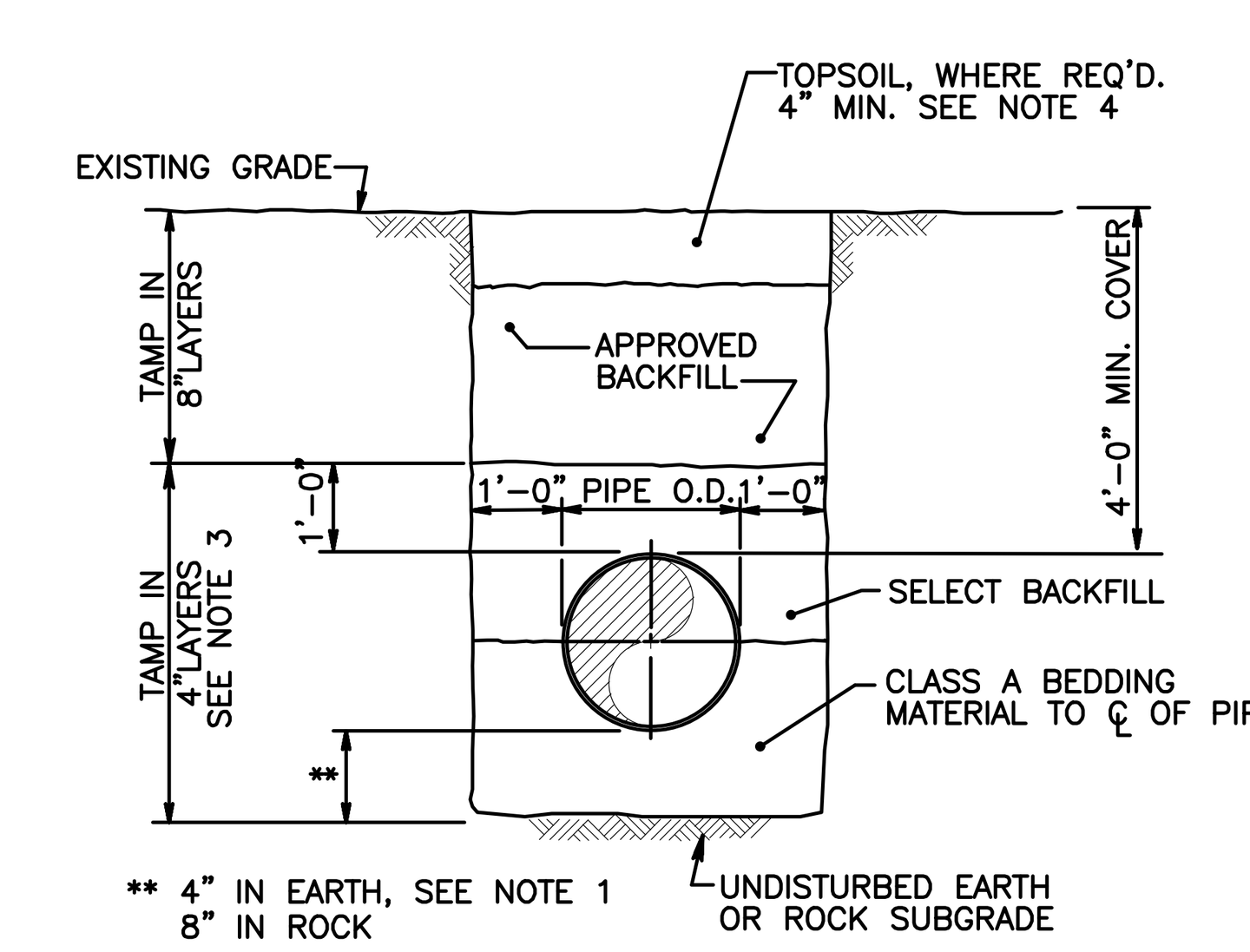

NOTES:
1. IF UNSUITABLE SUBSOIL IS ENCOUNTERED AT THE NORMAL TRENCH SUBGRADE, THE CONTRACTOR SHALL REMOVE IT TO THE DEPTH DIRECTED BY THE ENGINEER IN THE FIELD, AND BACKFILL w/ CLASS A BEDDING IN 4" LAYERS.
2. BOTTOM OF TRENCH SHALL BE FREE OF WATER PRIOR TO WATER MAIN INSTALLATION.
3. IF VIBRATORY COMPACTION EQUIPMENT IS USED BACKFILL MAY BE IN 8" LAYERS.
4. PROVIDE 4" OF TOPSOIL WHERE SEEDING IS REQUIRED. SEE NOTE 6 AT GRAVEL DRIVEWAYS.
5. CONTRACTOR SHALL SHORE THE TRENCH IN ACCORDANCE WITH SECTION 02151 OF THE SPECIFICATIONS.
6. GRAVEL AND PAVED DRIVEWAYS TO BE RESTORED IN KIND.
7. CONTRACTOR MAY SUBSTITUTE PA NO. 2A FOR CLASS A BEDDING AT NO INCREASED COST TO THE OWNER WITH WRITTEN PERMISSION FROM THE ENGINEER OR OWNER. FOR DESCRIPTION OF BACKFILL MATERIAL, SEE SPECIFICATION SECTION 02221.
8. ALL PAVING RESTORATION TO BE IN ACCORDANCE WITH PennDOT PUB. 408/2003 AND PUB. 72M.

TYPICAL TRENCH (UNPAVED AREAS)
NOT TO SCALE

NO.	DATE	REVISION
2	4–25–22	REVISED PER NLT, LEB. CO. ENGINEER & CITY OF LEB. AUTHORITY
1	2–1–22	REVISED PER NLT, LEB. CO. ENGINEER, LCPD, NLTMA, & CITY OF LEB. AUTHORITY

FOR PIONEER MANAGEMENT BY:

MANAGER: JAMES C. HENKE		SURV. CHIEF: RC	FIELDBOOK NO. VALUE
DESIGN BY: JDB/KWG	CHKD BY: JDB/JCH	DRAWN BY: RC	CHKD BY: RC

DRAWING REFERENCE: F:\12\12-0950-02\CAD\Final-Ph4\Details.dwg
XREFS: TB [F:\12\12-0950-02\CAD\Final-Ph4\X-refs\TB.dwg]

CLIENT
LANDMARK HOMES AT SWEETBRIAR
c/o MR. CLIFF WEAVER
1737 WEST MAIN STREET
EPHRATA, PA 17522
(717) 733–1536

SCALE
AS NOTED

PIONEER
Management, LLC
111 Millersville Road, Lancaster, PA 17603
Phone (717) 481–5500 · Fax (717) 481–4955
Email: jh@pioneermanagementllc.com
Website: www.pioneermanagementllc.com

WATERLINE DETAILS
FINAL PHASE 4 & REVISED FINAL PHASE 3 SUBDIVISION PLAN
FOR
THE CROSSINGS AT SWEET BRIAR
NORTH LEBANON TOWNSHIP LEBANON COUNTY, PA

DATE: JUNE 25, 2021
SHEET NO. 37 OF 43
DWG. NO. 12–0950–02–F

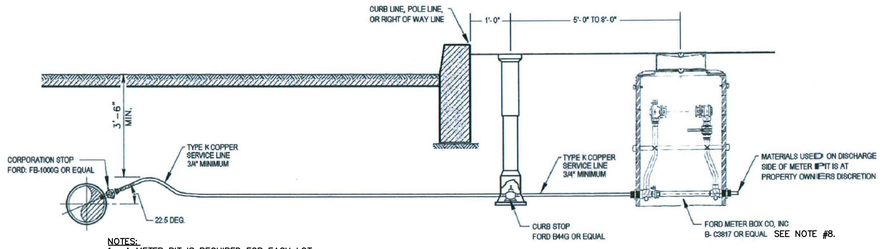

NOTES:
1. A METER PIT IS REQUIRED FOR EACH LOT.
2. ANY WATER SERVICE CONNECTIONS AT THE MAIN ARE REQUIRED TO BE OF COPPER 3/4" OR GREATER. IF SERVICE BEING REPLACED IS LARGER, REPLACE WITH SAME SIZE.
3. CURB STOP LOCATION: 3'-0" MINIMUM BEYOND ROAD EDGE OR NO MORE THAN 1'-0" BEHIND CURB LINE.
4. METER PIT LOCATION: 5'-0" TO 8'-0" BEHIND CURB STOP.
5. IT IS THE DISCRETION OF THE PROPERTY OWNER AS TO SERVICE LINE MATERIALS USED ON OWNER'S SIDE OF THE METER PIT.
6. ANY VALVE BOXES LOCATED IN ROADWAY OR TRAFFIC AREAS ARE REQUIRED TO BE "ROADWAY BOXES."
7. ANY METER PITS INSTALLED IN ROADWAY OR TRAFFIC AREAS ARE REQUIRED TO BE MADE OF CONCRETE.
8. THE METER PIT TYPE IS A MUELLER THERMAL COIL STYLE OR EQUIVALENT.

TYPICAL WATER SERVICE WITH METER PIT CONNECTION DETAIL

NOT TO SCALE

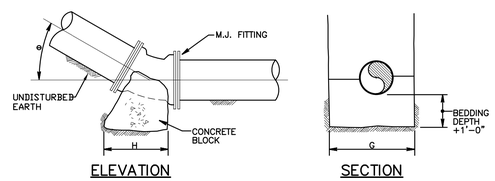

ELEVATION SECTION

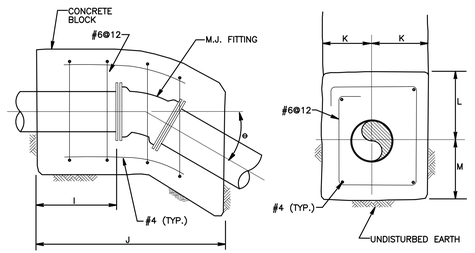

ELEVATION SECTION

TYPICAL VERTICAL REACTION BACKINGS

NOT TO SCALE

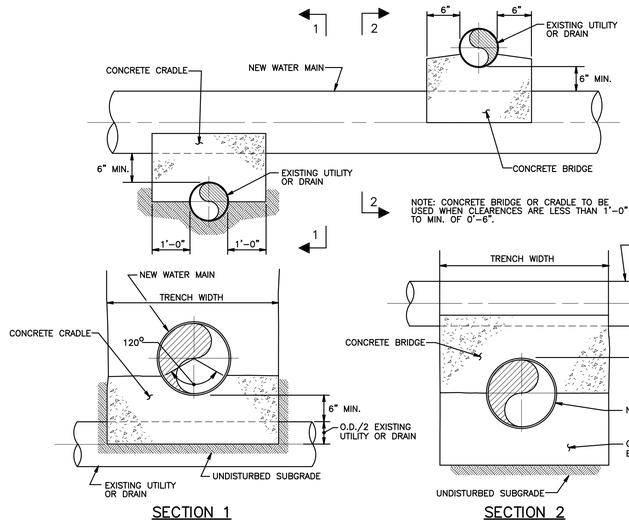

SECTION 1 SECTION 2

CONCRETE CRADLE AND CONCRETE BRIDGE DETAIL

NOT TO SCALE

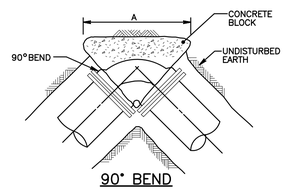

90° BEND

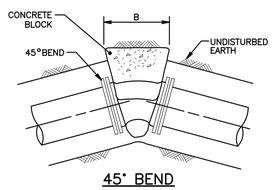

45° BEND

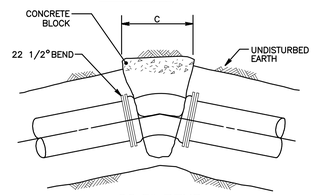

22.5° BEND

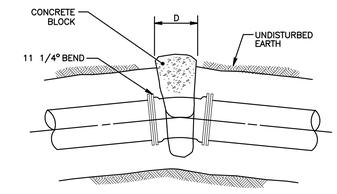

11.25° BEND

NOTES:
1. REACTION BACKING DIMENSIONS HAVE BEEN CALCULATED USING A SOIL BEARING CAPACITY OF 2000 POUNDS PER SQUARE FOOT AND TEST PRESSURES AS INDICATED.
2. ALL FITTINGS SHALL BE MECHANICAL JOINT AND SHALL HAVE WEDGE ACTION FOLLOWER GLANDS INSTALLED TO MANUFACTURERS SPECIFICATIONS, EXCEPT IN RESTRAINED JOINT AREAS.
3. ALL CONCRETE SHALL BE HIGH EARLY STRENGTH.

TYPICAL HORIZONTAL BENDS & REACTION BACKINGS

NOT TO SCALE

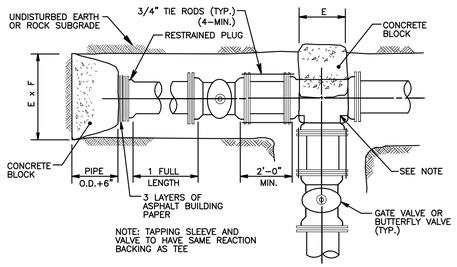

PLUG AND TEE OR TAPPING SLEEVE

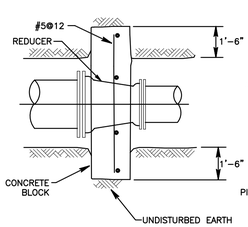

PLAN

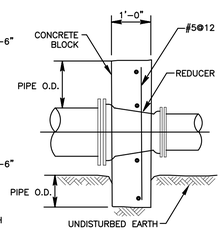

ELEVATION

REDUCER

TABLE OF REACTION BACKING DIMENSIONS																			
PIPE DIA.	TEST PRESSURE (PSI)	A	B	C	D	E	F	G	H			I			J			K	L	M
									45	22½	11¼	45	22½	11¼	45	22½	11¼			
24"	150	11'-0"	6'-0"	3'-0"	1'-8"	8'-0"	5'-0"	4'-0"	7'-6"	3'-9"	2'-0"	9'-0"	4'-0"	1'-6"	10'-0"	5'-0"	2'-0"	2'-0"	3'-0"	2'-0"
20"	150	8'-8"	4'-8"	2'-6"	1'-4"	6'-3"	4'-6"	3'-8"	5'-9"	3'-0"	1'-6"	8'-6"	3'-6"	1'-6"	9'-4"	4'-3"	1'-10"	2'-10"	1'-10"	
16"	150	6'-2"	3'-6"	2'-0"	1'-0"	4'-3"	4'-0"	3'-4"	4'-3"	2'-2"	1'-2"	5'-6"	2'-6"	1'-0"	6'-0"	3'-3"	1'-8"	2'-8"	1'-8"	
12"	150	5'-0"	2'-8"	1'-3"	1'-0"	3'-6"	3'-0"	3'-0"	2'-8"	1'-4"	1'-0"	3'-6"	1'-8"	0'-9"	8'-9"	4'-6"	2'-3"	1'-6"	2'-6"	1'-6"
10"	150	4'-3"	2'-6"	1'-6"	1'-0"	3'-0"	2'-6"	2'-10"	2'-2"	1'-2"	1'-0"	3'-9"	1'-0"	0'-3"	7'-0"	3'-6"	2'-0"	1'-5"	2'-5"	1'-5"
8"	150	3'-6"	2'-0"	1'-0"	1'-0"	2'-6"	2'-0"	2'-8"	1'-6"	1'-0"	1'-0"	1'-10"	0'-6"	0'-4"	5'-0"	2'-6"	2'-0"	1'-4"	2'-4"	1'-4"
6"	150	2'-8"	1'-6"	1'-0"	1'-0"	2'-0"	1'-6"	2'-6"	1'-0"	1'-0"	1'-0"	1'-0"	0'-6"	0'-4"	3'-0"	2'-0"	2'-0"	1'-3"	2'-3"	1'-3"
4"	150	2'-0"	1'-0"	1'-0"	1'-0"	1'-0"	1'-0"	2'-4"	1'-0"	1'-0"	1'-0"	1'-0"	0'-4"	0'-4"	2'-0"	2'-0"	2'-0"	1'-3"	2'-2"	1'-2"

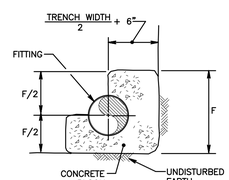

SECTION

REACTION BACKING DETAIL

NOT TO SCALE

NO.	DATE	REVISION
2	4-25-22	REVISED PER N.T. LEB. CO. ENGINEER & CITY OF LEB. AUTHORITY
1	2-1-22	REVISED PER N.T. LEB. CO. ENGINEER, LCPD, NLTMA, & CITY OF LEB. AUTHORITY

FOR PIONEER MANAGEMENT BY:

MANAGER: JAMES C. HENKE
DESIGN BY: JDB/KWG
SURV. CHIEF: RC
DRAWN BY: RC
FIELDBOOK NO. VALUE
CHKD BY: JDB/JCH
CHKD BY: RC
DRAWING REFERENCE: F:\12\12-0950-02\CAD\Xrefs-Plat\Details.dwg
XREFS: TB [F:\12\12-0950-02\CAD\Xrefs-Plat\LV-notch_TB.dwg]

CLIENT
LANDMARK HOMES AT SWEETBRIAR
c/o MR. CLIFF WEAVER
1737 WEST MAIN STREET
EPHRATA, PA 17522
(717) 733-1536

SCALE AS NOTED

PIONEER Management, LLC
111 Millersville Road, Lancaster, PA 17603
Phone: 717-481-4955 Fax: (717) 481-4955
Email: jdb@pioneermanagementllc.com
Website: www.pioneermanagementllc.com

WATERLINE DETAILS
FINAL PHASE 4 & REVISED FINAL PHASE 3 SUBDIVISION PLAN
FOR
THE CROSSINGS AT SWEET BRIAR
NORTH LEBANON TOWNSHIP LEBANON COUNTY, PA

DATE: JUNE 25, 2021
SHEET NO. 38 OF 43
DWG. NO. 12-0950-02-F

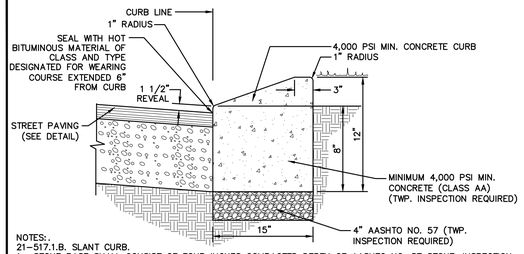

NOTES:.
21-517.1.B. SLANT CURB.

1. STONE BASE SHALL CONSIST OF FOUR INCHES COMPACTED DEPTH OF AASHTO NO. 57 STONE. INSPECTION AND APPROVAL OF THE STONE BASE IS REQUIRED FROM THE TOWNSHIP ROAD FOREMAN, PRIOR TO THE PLACING OF THE CONCRETE CURB.
2. WIDTH OF CURB TO BE 15 INCHES.
3. STREET SIDE HEIGHT OF CURB TO BE EIGHT INCHES, WITH A FINISHED REVEAL OF 1.5 INCHES.
4. HOUSE SIDE HEIGHT OF CURB TO BE 12 INCHES.
5. TYPE OF MATERIAL TO BE USED IS CLASS AA CEMENT CONCRETE – 4,000–PSI (TWENTY–EIGHT–DAY STRUCTURAL DESIGN COMPRESSIVE STRENGTH) CONCRETE.
6. CONTRACTION JOINTS (SAW CUTS) EVERY 10 FEET AND AT THE BEGINNING OF CURB TRANSITIONS FOR STRUCTURES. CONTRACTION JOINTS SHALL BE TWO INCHES DEEP BY 3/16 INCH WIDE AND BE SEALED AS PER THE LATEST VERSION OF THE COMMONWEALTH OF PENNSYLVANIA, DEPARTMENT OF TRANSPORTATION, SPECIFICATIONS, PUBLICATION 408, SECTION 501.3(N).
7. EXPANSION JOINTS EVERY 50 FEET, AT STRUCTURES AND AT THE END OF WORKDAY. EXPANSION JOINTS SHALL BE THE FULL CROSS–SECTION AREA OF THE CURB AND BE 3/4 INCH WIDE AND BE SEALED WITH 3/4 INCH PREMOLDED EXPANSION JOINT MATERIAL FOR THE FULL CROSS–SECTIONAL AREA OF THE CURB. PREMOLDED EXPANSION JOINT MATERIAL SHALL CONFORM TO THE LATEST VERSION OF THE COMMONWEALTH OF PENNSYLVANIA, DEPARTMENT OF TRANSPORTATION, SPECIFICATIONS, PUBLICATION 408, SECTION 705.1.
8. CURBING SHALL BE FREE OF ANY STRESS CRACKS OR ANY OTHER DEFORMITIES.
9. AFTER INSTALLATION OF THE CURBING, NO BORINGS OR CUTS CAN BE MADE BY THE DEVELOPER WITHOUT PERMISSION OF NORTH LEBANON TOWNSHIP. TO ALLOW VERIFICATION OF PROPER RESTORATION, THE ROAD FOREMAN, OR DESIGNATED AGENT, MUST BE PRESENT DURING ANY PERMITTED CUTS OR BORINGS. ANY CUTS OR BORINGS MADE WITHOUT TOWNSHIP AUTHORIZATION WILL BE REQUIRED TO BE RE–EXCAVATED, AT THE DEVELOPER'S EXPENSE, TO ALLOW VERIFICATION OF PROPER RESTORATION. THE STREET SYSTEM WILL NOT BE ACCEPTED UNLESS INSPECTIONS ARE MADE AND APPROVAL IS GRANTED BY NORTH LEBANON TOWNSHIP.
10. WHEN WEARING COURSE IS PLACED ADJACENT TO CURBS TO FORM A BITUMINOUS GUTTER, SEAL WITH HOT BITUMINOUS MATERIAL OF THE CLASS AND TYPE DESIGNATED FOR THE WEARING COURSE, EXTENDING SIX INCHES FROM THE CURB, APPLIED EVENLY. A SIMILAR SEAL SHALL BE PROVIDED ALONG THE WEARING COURSE CONTACT WITH STRUCTURES SUCH AS MANHOLES, INLETS, ETC. SEAL MATERIALS SHALL CONFORM TO THE LATEST VERSION OF THE COMMONWEALTH OF PENNSYLVANIA, DEPARTMENT OF TRANSPORTATION, SPECIFICATIONS, PUBLICATION 408, SECTION 401.3(G).

TYPICAL SLANT CURB DETAIL

NOT TO SCALE

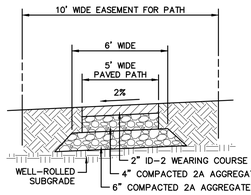

PAVED PATH OUTSIDE RIGHT–OF–WAY

NOT TO SCALE

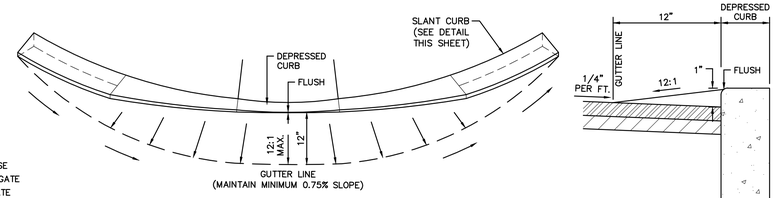

PLAN VIEW

SECTION VIEW

HANDICAP DEPRESSED CURB DETAIL

NOT TO SCALE

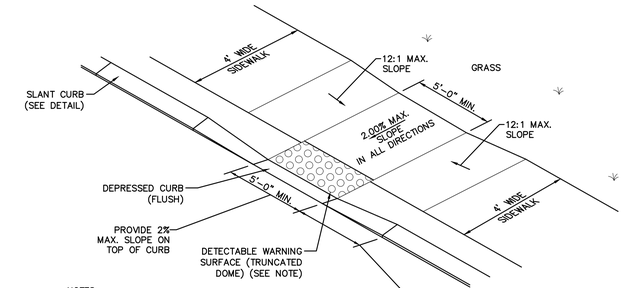

NOTES:

1. A TEXTURED PATTERN (SEE DETECTABLE WARNING DETAIL) ON ALL CURB/SIDEWALK RAMPS SHALL BE REQUIRED PER ADA REQUIREMENTS. RAMPS SHALL BE CONSTRUCTED IN ACCORDANCE WITH THE MOST RECENT ADA GUIDELINES.
2. SIDEWALK IS ONLY APPLICABLE ON ONE SIDE OF THE RAMP (SEE LAYOUT PLAS, SHEETS 6–8 FOR LOCATION).

HANDICAP RAMP (TYPE A)

NOT TO SCALE

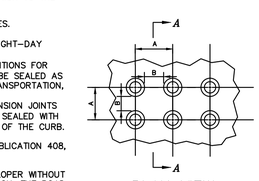

PLAN VIEW

TRUNCATED DOME DIMENSIONS		
DIM.	MIN.	MAX.
A	1.6"	2.4"
B	0.65"	1.5"
C	50% OF D	65% OF D
D	0.5"	1.4"

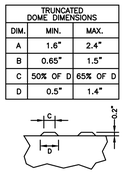

SECTION VIEW

DETECTABLE WARNING (TRUNCATED DOME)

NOT TO SCALE

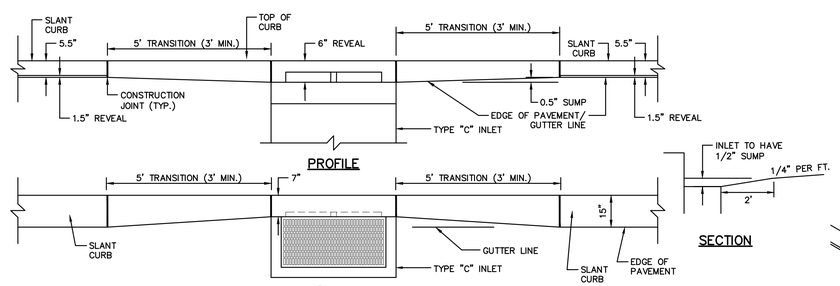

TRANSITION DETAIL – SLANT CURB TO TYPE–C INLET

NOT TO SCALE

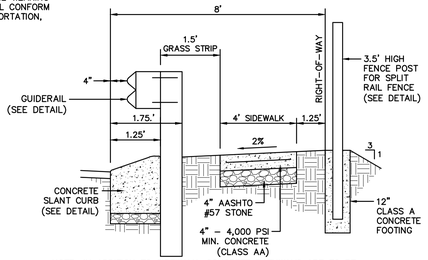

NOTE: IN ADDITION TO SIDEWALK, CONCRETE PATHWAYS ARE TO BE INSTALLED IN AREAS WITHIN THE STREET RIGHT–OF–WAY ON BRIAR ROSE AVENUE ONLY. ALL OTHER PATHWAYS WITHIN RIGHT–OF–WAYS ON MINOR ROADS AND AREAS OUTSIDE OF STREET RIGHT–OF–WAY, ASPHALT PAVING IS ACCEPTABLE. (SEE DETAIL)

SIDEWALK WITH FENCE AND GUIDERAIL WITHIN RIGHT–OF–WAY

NOT TO SCALE

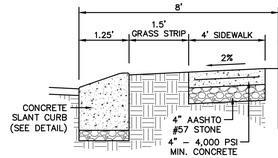

NOTES:

1. ONE–QUARTER (1/4) INCH EXPANSION JOINTS 20 FT. O.C. MAX.
2. PROVIDE TOOLED JOINTS EVERY 5 FT. O.C.
3. ALL SIDEWALKS TO HAVE A 2% CROSS SLOPE.
4. SIDEWALK TO BE LIGHT BROOM FINISHED IN DIRECTION OF SIDEWALK WIDTH.

SIDEWALK WITHIN RIGHT–OF–WAY

NOT TO SCALE

NOTES:
SECTION G – SIDEWALKS SHALL BE PROVIDED FOR ALL TOWNHOUSE DEVELOPMENTS, MULTI–FAMILY DEVELOPMENTS, AND RESIDENTIAL SUBDIVISIONS CONTAINING PUBLIC SEWER AND/OR LOTS OF 12,000 SQUARE FEET OR LESS. SIDEWALKS SHALL CONNECT TO NEARBY OR ADJACENT SIDEWALKS OR CREATE SUFFICIENT PEDESTRIAN CONNECTIVITY AS DEEMED APPROPRIATE BY THE TOWNSHIP.
OF TRANSPORTATION, CHAPTER 441, AND AS FOLLOWS:

1. SIDEWALKS WIDTH SHALL BE A MINIMUM OF FOUR FEET.
2. SIDEWALKS SHALL CONFORM TO THE GUIDELINES OF THE FEDERAL AMERICANS WITH DISABILITIES ACT (ADA) OF 1990, ENACTED JANUARY 26, 2002.
3. CROSS–SLOPE OF SIDEWALKS SHALL BE A 1/4 INCH PER FOOT, SLOPED TOWARDS THE CURB AND STREET.
4. SIDEWALKS SHALL BE CONSTRUCTED OF FOUR INCHES OF CLASS AA CEMENT CONCRETE – 4,000–PSI TWENTY–EIGHT–DAY STRENGTH PLAIN CEMENT CONCRETE, PLACED ON A BASE OF FOUR INCH DEEP SUBBASE OF AASHTO NO. 57 STONE. SIDEWALKS WITHIN THE WIDTH OF DRIVEWAYS SHALL BE CONSTRUCTED OF SIX INCHES OF CLASS AA CEMENT CONCRETE – 4,000–PSI TWENTY–EIGHT–DAY STRENGTH CEMENT CONCRETE REINFORCED WITH FIVE GAGE – SIX INCH BY SIX INCH WIRE MESH WITH A SIX INCH DEEP SUBBASE OF AASHTO NO. 57 STONE.
5. EXPANSION JOINTS SHALL BE PROVIDED AT A MINIMUM OF TWENTY–FOOT INTERVALS AND SHALL CONSIST OF 3/4 INCH PREMOLDED EXPANSION MATERIAL. CONTRACTION JOINTS SHALL BE PROVIDED AT A MINIMUM OF FOUR–FOOT INTERVALS.
6. A MINIMUM 1.5 FOOT GRASS STRIP SHALL BE PROVIDED BETWEEN THE BACK OF CURB AND THE EDGE OF THE SIDEWALK.
7. SIDEWALK CONCRETE SHALL BE COATED WITH A CURE AND SEAL COMPOUND IMMEDIATELY AFTER PLACEMENT AND FINISHING IS COMPLETED.

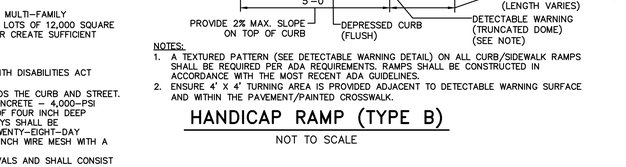

NOTES:

1. A TEXTURED PATTERN (SEE DETECTABLE WARNING DETAIL) ON ALL CURB/SIDEWALK RAMPS SHALL BE REQUIRED PER ADA REQUIREMENTS. RAMPS SHALL BE CONSTRUCTED IN ACCORDANCE WITH THE MOST RECENT ADA GUIDELINES.
2. ENSURE 4' X 4' TURNING AREA IS PROVIDED ADJACENT TO DETECTABLE WARNING SURFACE AND WITHIN THE PAVEMENT/PAINTED CROSSWALK.

HANDICAP RAMP (TYPE B)

NOT TO SCALE

NOTES:
SECTION I – DRIVEWAYS SHALL CONFORM TO THE DESIGN REQUIREMENTS OF THE LATEST VERSION OF THE COMMONWEALTH OF PENNSYLVANIA, PENNSYLVANIA CODE, TITLE 67 TRANSPORTATION, DEPARTMENT
OF TRANSPORTATION, CHAPTER 441, AND AS FOLLOWS:

1. DRIVEWAYS SHALL CONFORM TO THE STANDARDS SHOWN IN EXHIBIT "G" AND "H."
2. DRIVEWAYS MUST BE LOCATED TO PROVIDE ADEQUATE SITE DISTANCE TO ALLOW FOR SAFE MOVEMENT INTO AND OUT OF THE DRIVEWAY.
3. DRIVEWAYS SHALL NOT CREATE A HAZARD OR IMPAIR TRAFFIC MOVEMENT WITHIN THE STREET.
4. DRIVEWAYS SHALL BE POSITIONED AT RIGHT ANGLES TO THE ROADWAY CENTER LINE.
5. DRIVEWAYS SHALL PROVIDE FOR THE CONTINUED CONVEYANCE OF THE ROADWAY STORMWATER.
6. DRIVEWAYS SHALL NOT BE LOCATED AT ANY STORMWATER INLETS.
7. DRIVEWAYS SHALL BE PROVIDED WITH A CULVERT AS REQUIRED TO CONVEY OFF–STREET STORMWATER. ANY PIPE REQUIRED TO BE INSTALLED BY THE DEVELOPER OR HOMEOWNER MUST BE SIZED APPROPRIATELY AND CERTIFIED BY A PROFESSIONAL ENGINEER AND APPROVED BY THE COUNTY OR TOWNSHIP ENGINEER PRIOR TO INSTALLATION.
8. DRIVEWAYS SHALL BE PAVED A MINIMUM OF 15 FEET BEYOND THE EDGE OF THE ROADWAY.
9. CONTRACTORS INSTALLING DRIVEWAYS SHALL HAVE THE FOLLOWING INSURANCE COVERAGE.
   A. GENERAL LIABILITY INSURANCE:
      BODILY INJURY – $1,000,000
      PROPERTY DAMAGE – $500,000
   B. AUTOMOTIVE:
      BODILY INJURY – $1,000,000
      PROPERTY DAMAGE – $500,000
   C. WORKER'S COMPENSATION WHERE APPLICABLE
   D. WHEN BLASTING IS REQUIRED:
      BODILY INJURY – $1,000,000
      PROPERTY DAMAGE – $500,000
   E. THE TOWNSHIP MUST BE LISTED AS ADDITIONAL INSURED AND A "CERTIFICATE OF INSURANCE" MUST BE PROVIDED TO THE TOWNSHIP OFFICE BY THE INSURANCE AGENT FOR THE CONTRACTOR.
10. ADDITIONAL REQUIREMENTS AS OUTLINED BY THE ACCESS MANAGEMENT ORDINANCE [PART 6] ADOPTED BY THE BOARD OF SUPERVISORS.

ROAD COMPACTION NOTES

1. SUBGRADE: COMPACT SUBGRADE TO NOT LESS THAN 100% OF THE DETERMINED DRY–MASS (DRY–WEIGHT) DENSITY. THE DETERMINED DRY–MASS (DRY–WEIGHT) DENSITY SHOULD BE DETERMINED BY THE PENNSYLVANIA TEST METHOD (PTM) NO. 106 – METHOD B, PTM NO. 112, OR PTM NO. 402 FOR EACH 3,000 SQUARE YARDS OR LESS OF COMPLETED SUBGRADE. WHEN THE MATERIAL IS TOO COARSE (MORE THAN 20% RETAINED ON A 3/4–INCH SIEVE) TO UTILIZE THE PTM METHODS, COMPACTION SHOULD BE DETERMINED BASED ON THE NONMOVEMENT OF THE SUBGRADE MATERIAL UNDER THE COMPACTION EQUIPMENT. WHEN COMPACTING, THE SUBGRADE'S MOISTURE CONTENT SHOULD BE MAINTAINED TO NOT MORE THAN 2% ABOVE OPTIMUM MOISTURE FOR THE MATERIAL. WHEN THE SPECIFIED COMPACTION CANNOT BE OBTAINED, THE SUBGRADE MATERIAL SHALL BE EXCAVATED TO A DEPTH THAT WHEN REPLACED AND RECOMPACTED AT MOISTURE CONTENT NOT EXCEEDING OPTIMUM, THE SUBGRADE SHALL HAVE REQUIRED COMPACTION. IMMEDIATELY PRIOR TO THE PLACEMENT OF THE ROADWAYS STONE SUBBASE, THE SUBGRADE SHALL BE RECOMPACTED AND RESHAPED TO PROVIDE THE REQUIRED ROADWAY SUBGRADE COMPACTION AND ELEVATION. INSPECTION IS REQUIRED AT THE COMPLETION OF THE SUBGRADE COMPACTION BY THE TOWNSHIP ROAD FOREMAN OR HIS DELEGATE. ALL INSPECTIONS WILL REQUIRE A MINIMUM OF 24–HOUR NOTICE TO THE TOWNSHIP.
2. SUBBASE: SUBBASE MATERIAL SHALL CONSIST OF TYPE C OR BETTER, NO. 2A AND NO. 3 AGGREGATES AS SPECIFIED IN THE LATEST VERSION OF THE COMMONWEALTH OF PENNSYLVANIA, DEPARTMENT OF TRANSPORTATION, SPECIFICATIONS, PUBLICATION 408, SECTION 703.2. COMPACT THE UNIFORMLY SPREAD SUBBASE MATERIAL TO NOT LESS THAN 100% OF THE MAXIMUM DRY–MASS (DRY–WEIGHT) DENSITY. THE DETERMINED DRY–MASS (DRY–WEIGHT) DENSITY SHOULD BE DETERMINED BY THE PENNSYLVANIA TEST METHOD (PTM) NO. 106 – METHOD B, PTM NO. 112, OR PTM NO. 402 FOR EACH 3,000 SQUARE YARDS OR LESS OF COMPLETED SUBBASE. WHEN THE MATERIAL IS TOO COARSE (MORE THAN 20% RETAINED ON A 3/4–INCH SIEVE) TO UTILIZE THE PTM METHODS, COMPACTION SHOULD BE DETERMINED BASED ON THE NONMOVEMENT OF THE SUBBASE MATERIAL UNDER THE COMPACTION EQUIPMENT. COMPACTION OF THE SUBBASE SHALL BE INSTALLED IN MAXIMUM 4" LAYERS OF NO. 2A OR A MAXIMUM 5" LAYER OF NO. 3 (COMPACTED THICKNESS), UNTIL THE TOTAL REQUIRED SUBBASE THICKNESS IS ACHIEVED. COMPACTION SHALL PROCEED GRADUALLY FROM SIDES TO CENTER, WITH THE SUCCEEDING PASS UNIFORMLY OVERLAPPING THE PREVIOUS PASS, WHICH SHALL CONTINUE UNTIL THE SUBBASE IS PROPERLY COMPACTED AND SHAPED. IF THE SUBBASE MATERIAL DOES NOT CONTAIN SUFFICIENT MOISTURE AFTER PLACEMENT, ADD WATER TO OBTAIN THE PROPER COMPACTION. IMMEDIATELY PRIOR TO THE PLACEMENT OF THE ROADWAY PAVEMENT, THE SUBBASE SHALL BE RECOMPACTED AND RESHAPED TO PROVIDE THE REQUIRED ROADWAY SUBBASE COMPACTION AND ELEVATION. INSPECTION IS REQUIRED AT THE COMPLETION OF THE SUBBASE COMPACTION BY THE TOWNSHIP ROAD FOREMAN OR HIS DELEGATE. ALL INSPECTIONS WILL REQUIRE A MINIMUM OF 24–HOUR NOTICE TO THE TOWNSHIP.
3. PLANT MIXED BITUMINOUS CONCRETE COURSES – WEATHER LIMITATIONS: DO NOT PLACE BITUMINOUS PAVING MIXTURES BETWEEN OCTOBER 31 AND APRIL 1 FOR BASE COURSE PAVEMENT AND STANDARD WEARING COURSE PAVEMENT, UNLESS OTHERWISE PERMITTED IN WRITING BY AUTHORIZED TOWNSHIP PERSONNEL. DO NOT PLACE SUPER PAVE WEARING COURSES FROM OCTOBER 16 TO APRIL 1 UNLESS OTHERWISE PERMITTED IN WRITING BY AUTHORIZED TOWNSHIP PERSONNEL. DO NOT PLACE BITUMINOUS PAVING MIXTURES WHEN SURFACES ARE WET OR WHEN THE TEMPERATURE OF EITHER THE AIR OR THE SURFACE ON WHICH THE MIXTURE IS TO PLACE IS 40°F (4°C) OR LOWER. WHEN WORK IS HALTED BECAUSE OF WEATHER CONDITIONS, LIMITED QUANTITIES EN ROUTE TO THE PROJECT MAY BE PLACED, IF PERMITTED BY THE TOWNSHIP ROAD FOREMAN.
4. BASE COURSE PAVEMENT: BASE COURSE PAVING MATERIAL SHALL CONFORM TO LATEST VERSION OF THE COMMONWEALTH OF PENNSYLVANIA, DEPARTMENT OF TRANSPORTATION, SPECIFICATIONS, PUBLICATION 408, SECTION 409.2 AND SECTION 421.2. BASE COURSE PAVING SHALL CONFORM TO THE ABOVE MENTIONED WEATHER LIMITATIONS. THE BASE COURSE PAVEMENT SHALL BE INSTALLED IN A MAXIMUM OF 2" ROLLED LAYERS, UNTIL THE TOTAL REQUIRED BASE COURSE DEPTH IS ACHIEVED. NINETY PERCENT (90%) OF ALL THE LOTS MUST BE DEVELOPED AND A MINIMUM OF ONE (1) YEAR MUST ELAPSE FROM THE INSTALLATION OF THE BASE COURSE PAVING PRIOR TO THE INSTALLATION OF THE WEARING COURSE. INSPECTION IS REQUIRED BY THE TOWNSHIP ROAD FOREMAN OR HIS DELEGATE DURING THE BITUMINOUS PLACEMENTS. ALL INSPECTIONS WILL REQUIRE A MINIMUM OF 24–HOUR NOTICE TO THE TOWNSHIP.

   AFTER INSTALLATION OF BASE COURSE NO STREET CUTS CAN BE MADE BY THE DEVELOPER WITHOUT THE PERMISSION OF NORTH LEBANON TOWNSHIP ROAD FOREMAN OR SUPERVISORS. A STREET CUT PERMIT IS REQUIRED. THE ROAD FOREMAN, OR DESIGNATED AGENT, MUST BE PRESENT DURING ANY PERMITTED CUTS FOR PROPER RESTORATION. ANY CUTS MADE WITHOUT AUTHORIZATION BY THE TOWNSHIP WILL BE REQUIRED TO BE REDUG, AT THE DEVELOPER'S EXPENSE, SO VERIFICATION CAN BE MADE ON PROPER RESTORATION.
5. BITUMINOUS TACK COAT: PRIOR TO THE PLACEMENT OF THE WEARING COURSE, THE BASE COURSE SHALL BE CONDITIONED AND TREATED WITH THE APPLICATION OF A BITUMINOUS BONDING MATERIAL CONFORMING TO THE LATEST VERSION OF THE COMMONWEALTH OF PENNSYLVANIA, DEPARTMENT OF TRANSPORTATION, SPECIFICATIONS, PUBLICATION 408, SECTION 460. APPLY THE EMULSIFIED ASPHALT TACK COAT AT A RATE TO LEAVE A UNIFORM ASPHALT RESIDUE FROM 0.02 TO 0.07 GALLONS PER SQUARE YARD, OR AS APPROVED BY THE TOWNSHIP ROAD FOREMAN. APPLY THE TACK COAT ONLY WHEN THE AIR TEMPERATURE IS 4°C (40°F) AND RISING. DO NOT APPLY TO A WET SURFACE, OR DURING WET WEATHER. FOLLOWING APPLICATION AND PRIOR TO SUCCEEDING CONSTRUCTION, ALLOW THE TACK COAT TO CURE, WITHOUT BEING DISTURBED, UNTIL THE WATER HAS COMPLETELY SEPARATED AND EVAPORATED, AS DETERMINED BY THE TOWNSHIP ROAD FOREMAN. INSPECTION IS REQUIRED BY THE TOWNSHIP ROAD FOREMAN OR HIS DELEGATE DURING THE BITUMINOUS PLACEMENTS. ALL INSPECTIONS WILL REQUIRE A MINIMUM OF 24–HOUR NOTICE TO THE TOWNSHIP.
6. WEARING COURSE PAVEMENT: NINETY PERCENT (90%) OF ALL THE LOTS MUST BE DEVELOPED AND A MINIMUM OF ONE (1) YEAR MUST ELAPSE FROM THE INSTALLATION OF THE BASE COURSE PAVING PRIOR TO THE INSTALLATION OF THE WEARING COURSE. WEARING COURSE PAVING MATERIAL SHALL CONFORM TO THE LATEST VERSION OF THE COMMONWEALTH OF PENNSYLVANIA, DEPARTMENT OF TRANSPORTATION, SPECIFICATIONS, PUBLICATION 408, SECTION 409.2 AND SECTION 420.2. WEARING COURSE PAVING SHALL CONFORM TO THE ABOVE MENTIONED WEATHER LIMITATIONS. PRIOR TO THE PLACEMENT OF THE WEARING COURSE PAVING, ALL DEFICIENCIES IN THE BASE COURSE PAVING MUST BE REPAIRED. PRIOR TO THE PLACEMENT OF THE WEARING COURSE A BITUMINOUS TACK COAT SHALL BE APPLIED TO THE BASE COURSE PAVEMENT. WEARING COURSE PAVING SHALL NOT BE COMPLETED IF IT WILL BE SUBJECTED TO HIGH TEMPERATURES OR CHANNELIZED TRAFFIC FOR EXTENDED PERIODS OF TIME. INSPECTION IS REQUIRED BY THE TOWNSHIP ROAD FOREMAN OR HIS DELEGATE DURING THE BITUMINOUS PLACEMENTS. ALL INSPECTIONS WILL REQUIRE A MINIMUM OF 24–HOUR NOTICE TO THE TOWNSHIP.

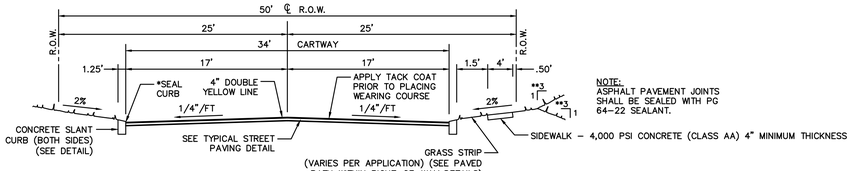

NOTE:
ASPHALT PAVEMENT JOINTS SHALL BE SEALED WITH PG 64–22 SEALANT.

*SEAL WITH HOT BITUMINOUS MATERIAL OF CLASS AA TYPE DESIGNATED FOR WEARING COURSE, EXTENDING 12" FROM CURB

**GRADING BEYOND THE STREET RIGHT–OF–WAYS DOES NOT PROVIDE THE MAXIMUM 3:1 SLOPE IN SOME LOCATIONS (SEE PLAN FOR LOCATIONS) THE PLACEMENT AND COMPACTION OF ALL FILL MATERIAL AND SUPPORTING STREET RIGHT–OF–WAYS WITH SLOPES STEEPER THAN 3 HORIZONTAL TO 1 VERTICAL SHALL HAVE WITNESSING AND APPROVAL REPORTS BY A PROFESSIONAL ENGINEER OR OTHER CERTIFIED PROFESSIONAL PREPARED AND PROVIDED TO NORTH LEBANON TOWNSHIP AND THE LCPD.

TYPICAL STREET CROSS–SECTION

NOT TO SCALE

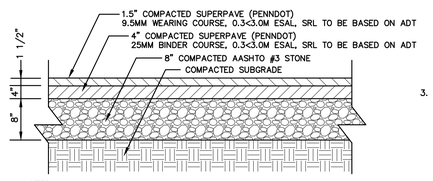

NOTES:

1. ALL SPECIFIED MATERIAL THICKNESS IS FULLY COMPACTED DEPTH.
2. NORTH LEBANON TOWNSHIP RESERVES THE RIGHT TO INCREASE SPECIFICATIONS BASED ON PROJECTED TRUCK TRAFFIC.
3. ALL STREETS AND STREET RELATED IMPROVEMENTS MUST MEET THE TOWNSHIP REGULATIONS. EACH COURSE REQUIRES A TOWNSHIP INSPECTION.

TYPICAL STREET PAVING DETAIL

NOT TO SCALE

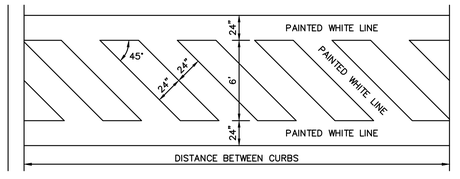

NOTES:
CROSSWALKS ARE REQUIRED AT ALL STREET INTERSECTIONS AND AT LOCATIONS INTENDED FOR PEDESTRIAN TRAFFIC TO CROSS STREETS. THE CROSSWALKS SHALL BE COORDINATED WITH SIDEWALKS AND OTHER PEDESTRIAN PATHS. CROSSWALK LINES SHALL BE SOLID WHITE LINES. ALL STREET MARKINGS SHALL CONFORM TO THE LATEST VERSION OF TITLE 67, CHAPTER 211, OFFICIAL TRAFFIC–CONTROL DEVICES – PUBLICATION 68.

1. WHITE OR YELLOW (TYPE I) CONVENTIONAL TRAFFIC PAINT AS PER THE LATEST VERSION OF THE COMMONWEALTH OF PENNSYLVANIA, DEPARTMENT OF TRANSPORTATION, SPECIFICATIONS, PUBLICATION 408, SECTION 962.2. TOWNSHIP INSPECTOR REQUIRED TO BE PRESENT DURING APPLICATION PROCESS.
   A. APPLY WITH PNEUMATICALLY OPERATED EQUIPMENT ACCEPTABLE TO PENNDOT. DO NOT APPLY WITH HAND ROLLERS OR BRUSHES.
   B. DISPENSE PAINT IN A WET–FILM THICKNESS OF 380 PM +/– 30 PM (15 MILS +/– 1 MIL).
   C. GLASS BEADS MUST BE APPLIED AT A RATE OF SIX POUNDS PER GALLON OF PAINT.
   D. PAINT SHALL BE APPROPRIATELY PROTECTED FROM VEHICULAR AND PEDESTRIAN TRAFFIC FOR A MINIMUM OF 30 MINUTES OR UNTIL PAINT IS DRY AND TRACK FREE.
   E. PAINT SHALL BE APPLIED TO A CLEAN DRY SURFACE. ALL DIRT AND DEBRIS MUST BE SWEPT OR BLOWN FROM THE ROADWAY SURFACE.
   F. PAINT SHALL NOT BE APPLIED WHEN THE AIR TEMPERATURE IS LESS THAN 5° C. (40° F.).
2. WHITE OR YELLOW COLD PLASTIC PAVEMENT MARKING AS PER THE LATEST VERSION OF THE COMMONWEALTH OF PENNSYLVANIA, DEPARTMENT OF TRANSPORTATION, SPECIFICATIONS, PUBLICATION 408, SECTION 1103.14. TOWNSHIP INSPECTOR REQUIRED TO BE PRESENT DURING APPLICATION PROCESS.
   A. REFLECTIVE MARKINGS CONSISTING OF A PIGMENTED PLASTIC, WHICH CONTAINS REFLECTIVE GLASS BEADS UNIFORMLY DISTRIBUTED THROUGHOUT THE ENTIRE CROSS–SECTIONAL AREA AND CAN BE APPLIED TO BITUMINOUS OR CONCRETE PAVEMENT BY MEANS OF A FACTORY APPLIED, PRESSURE SENSITIVE ADHESIVE.
   B. GLASS BEADS AS PER AASHTO M 247.
   C. APPLY ONLY WHEN SURFACE TEMPERATURE IS 16° C. (60° F.) OR ABOVE.
   D. SATISFACTORY CLEAN THE ROADWAY SURFACE BEFORE APPLICATION. ALL DIRT AND DEBRIS MUST BE SWEPT OR BLOWN FROM THE ROADWAY SURFACE.
   E. USE A COMPATIBLE "ADHESIVE ACTIVATOR" OR "PRIMER SEALER" AND APPLY AS PER THE MANUFACTURER'S RECOMMENDATIONS.
3. WHITE OR YELLOW HOT THERMOPLASTIC PAVEMENT MARKING MATERIAL AS PER THE LATEST VERSION OF THE COMMONWEALTH OF PENNSYLVANIA, DEPARTMENT OF TRANSPORTATION, SPECIFICATIONS, PUBLICATION 408, AND SPECIAL PROVISION 960, AND ALSO CONFORM TO THE LATEST VERSION OF THE COMMONWEALTH OF PENNSYLVANIA, DEPARTMENT OF TRANSPORTATION, TITLE 67, CHAPTER 211, OFFICIAL TRAFFIC CONTROL DEVICES.
   A. WHITE REFLECTIVE THERMOPLASTIC STRIPING MATERIAL, AASHTO M249, ALKYD BINDER MATERIAL.
   B. GLASS BEADS AS PER AASHTO M247.
   C. APPLY ONLY WHEN THE AIR TEMPERATURE IS BETWEEN 50° F. TO 90° F. AND WHEN THE WIND VELOCITY IS LESS THAN 20 MILES PER HOUR.
   D. APPLY USING A SCREED/EXTRUSION METHOD, HEAT THERMOPLASTIC TO A TEMPERATURE BETWEEN 400° F. AND 440° F. ON A DRY PAVEMENT TO A UNIFORM THICKNESS OF 90 MILS.
   E. FOR ADHESION, PROVIDE REQUIRED SATISFACTORY CLEANING OF THE ROAD SURFACE AND NECESSARY PRE–TREATMENT, WHICH INCLUDES A PRIMER SEALER RECOMMENDED BY THE THERMOPLASTIC MANUFACTURE ON ALL PORTLAND CEMENT CONCRETE SURFACES AND ON ALL BITUMINOUS SURFACES THAT ARE TWO OR MORE YEARS OLD.

PEDESTRIAN CROSSWALK

NOT TO SCALE

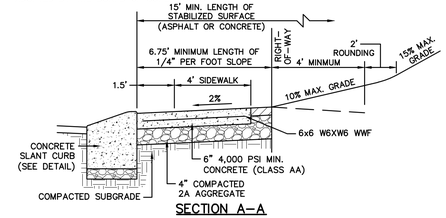

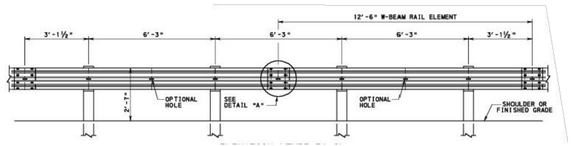

ELEVATION

PENNDOT RAIL ELEMENT DETAIL W/ POST SPACING

NOT TO SCALE

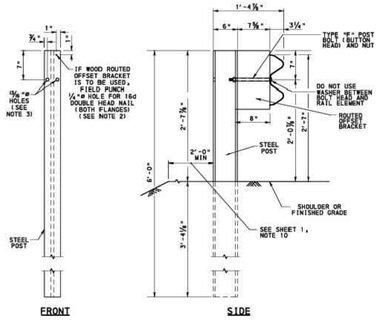

W6X9 OR W6X8.5 POST DETAILS

GUIDE RAIL SHALL BE WEATHERING STEEL (CORTEN) GUARDRAIL BY ELDERLEE, INC., OR APPROVED EQUAL.
PENNDOT PUB. 35, BULLETIN 15 LISTS ELDERLEE, INC. AS AN APPROVED MANUFACTURER OF GUIDE RAIL.
SHOP DRAWINGS WILL BE PROVIDED TO THE TOWNSHIP FOR APPROVAL PRIOR TO CONSTRUCTION.

NOTES:
1. PROVIDE MATERIALS AND CONSTRUCTION MEETING THE REQUIREMENTS OF PUBLICATION 408, SECTION 620.
2. PROVIDE STEEL I-BEAM W150X13.5 (W6X8.5), POSTS WITH ROUTED WOOD, PLASTIC OR COMPOSITE OFFSET, BRACKETS AS LISTED IN BULLETIN 15.
3. FOR INSTALLATION OF GUIDE RAIL OVER UNDERGROUND STRUCTURES, THE CONCRETE REINFORCEMENT BARS AND HARDWARE ARE INCIDENTAL TO THE GUIDE RAIL PAY ITEM.
4. PROVIDE RUBBING RAIL WHEN THE HEIGHT OF THE STRONG POST GUIDE RAIL IS OVER 28" IN TRANSITION AREAS TO EXISTING GUIDE RAIL.
5. ATTACH W-BEAM RAIL ELEMENTS TO EACH POST. SPLICE RAIL ELEMENTS ONLY AT POSTS AND LAP IN THE DIRECTION OF TRAFFIC.
6. ALL DIMENSIONS ARE IN MILLIMETERS UNLESS OTHERWISE NOTED. US CUSTOMARY UNITS IN PARENTHESIS.
7. INSTALL GUIDE RAIL DELINEATORS IN ACCORDANCE WITH TC-7604.=
8. PROVIDE END TREATMENTS AT EACH END OF GUIDE RAIL IN CONFORMANCE WITH RC-51M, SHEET 3 OF 16.
9. ALL PROPOSED GUIDE RAIL WITHIN THE PUBLIC RIGHT-OF-WAY SHALL CONFORM TO PENNDOT RC DRAWINGS AND STANDARDS (RC-50M, RC-51M AND RC-52M).

PENNDOT TYPE 2 STRONG POST GUIDE RAIL DETAIL

NOT TO SCALE

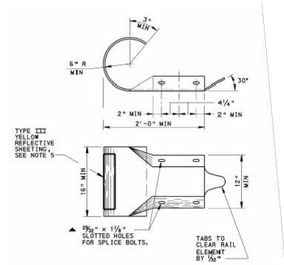

TERMINAL SECTION TO BE PLACED ON FACE OF RAIL ELEMENT

REFER TO RC-54M, SHEET 10 FOR APPLICATIONS

PENNDOT GUIDE RAIL END TREATMENT DETAIL

NOT TO SCALE

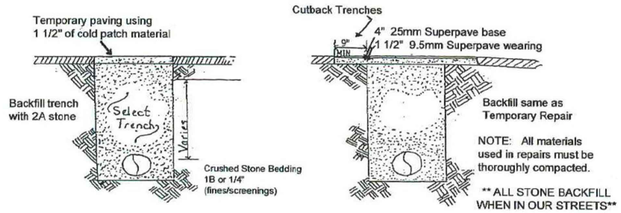

TEMPORARY REPAIR

PERMANENT REPAIR

NOTES:
1. WHEN WORKING WITHIN THE NORTH LEBANON TOWNSHIP RIGHT-OF-WAY, ALL OPENINGS AND OBSTRUCTIONS (ABOVE GROUND) REQUIRE A PERMIT AND MUST BE COMPLETED IN ACCORDANCE WITH TOWNSHIP SPECIFICATION, PERMIT, BONDING AND INSURANCE CERTIFICATES REQUIRED PER TOWNSHIP ORDINANCE. THIS SHALL APPLY TO ANY RIGHT-OF-WAY INTENDED TO BE DEDICATED TO THE TOWNSHIP REGARDLESS OF WHETHER IN BINDER COURSE ONLY OR BOTH BINDER AND WEARING COURSE. THE CONTRACTOR OR PARTY RESPONSIBLE FOR THE REPAIR HAS TWO OPTIONS:
   A. INSTALL PERMANENT REPAIRS INITIALLY; OR,
   B. INSTALL A TEMPORARY REPAIR, THEN RETURN TO INSTALL A PERMANENT REPAIR WITHIN 90 DAYS.
2. WITH EITHER OPTION THE CONTRACTOR, OR RESPONSIBLE PARTY, CAN BE REQUIRED TO RETURN AT ANY TIME DURING TWO YEARS MINIMUM, FOLLOWING THE INITIAL WORK TO CORRECT ANY DEFICIENCIES IN ACCORDANCE WITH THE TOWNSHIP SPECIFICATIONS AND THE RECOMMENDATIONS OF THE TOWNSHIP ROADMASTER OR BOARD OF SUPERVISORS. FAILURE TO CORRECT ANY DEFICIENCIES WITHIN FIVE DAYS OF NOTIFICATION, WILL RESULT IN TOWNSHIP PERFORMING THE CORRECTIONS AND BILLING THE RESPONSIBLE PARTY. SPECIAL AGREEMENTS MAY BE REQUIRED FOR UNIQUE CIRCUMSTANCES AT THE DISCRETION OF THE BOARD OF SUPERVISORS, WHICH WOULD OVERRIDE THESE MAINTENANCE REQUIREMENTS.
3. EXCAVATION – TEMPORARY/PERMANENT. IN ADDITION TO THE TRENCH, EXCAVATIONS SHOULD INCLUDE THE REMOVAL OF THE EXISTING PAVED SURFACES NINE INCHES BACK FROM THE SIDES OF THE TRENCH EXPOSING UNDISTURBED SUBGRADE. THE PRESENT ROAD SHALL BE CUT OR SAWED IN A NEAT STRAIGHT LINE TO THE BOTTOM OF THE EXISTING BASE COURSE. THE DETACHED MATERIAL SHALL BE REMOVED. NOTE: THE NINE INCH CUTBACK IS MANDATORY FOR ALL TRENCHES.
4. BACKFILL-TEMPORARY/PERMANENT. THE TRENCH MUST BE BACKFILLED WITH 2A OR FINE MATERIAL (TYPE A OR BETTER STONE MEETING THE REQUIREMENTS FOR NO. 1 AGGREGATE) AROUND THE PIPE TO SIX INCHES ABOVE THE PIPE OR AS REQUIRED BY OTHER SPECIFICATIONS (WATER, SEWER, OR GAS) AND APPROVED BY THE TOWNSHIP.
5. COMPACTION-TEMPORARY/PERMANENT. MATERIALS USED FOR BACKFILL MUST BE 2A MODIFIED AND MECHANICALLY TAMPED IN LAYERS OF 10 INCHES OR LESS.
6. WEARING AND BINDER-PERMANENT. THE PERMANENT BINDER AND SURFACE COURSE SHALL BE PLACED IN ACCORDANCE WITH THE DEPTHS OF EXISTING BITUMINOUS SURFACE. HOWEVER, IN NO CASE, SHALL THE BINDER COURSE BE LESS THAN FOUR INCHES 25 MM SUPERPAVE 0.3 < 3 ESALS (AFTER COMPACTION) AND THE WEARING COURSE BE LESS THAN 1 1/2 INCHES 9.5MM SUPERPAVE 0.3 < 3 EASLS (AFTER COMPACTION); SRL TO BE BASED ON ADT. BINDER COURSE MAY NOT BE INSTALLED IN MORE THAN TWO INCH INCREMENTS. PAVING SEAMS MUST BE SEALED. FOR NON-RESIDENTIAL STREETS THE TOWNSHIP SHALL DETERMINE EASLS ACCORDING TO TRAFFIC LEVEL. BINDER AND WEARING COURSE MUST MATCH EXISTING MATERIAL DEPTH OF KIMMERLINGS ROAD.
7. IDENTIFICATION-TEMPORARY/PERMANENT. AFTER THE REPAIR HAS BEEN INSTALLED, THE STREET CUT SHOULD BE IDENTIFIED BY THE USE OF A ONE FOOT PAINTED SQUARE; WITH DURABLE WEAR-RESISTANT PAINT. STREET CUTS SHOULD BE CODED ACCORDING TO USE; BLUE FOR WATER, YELLOW FOR GAS OR PETROLEUM, RED FOR ELECTRIC, ORANGE FOR COMMUNICATIONS, AND GREEN FOR SEWERS. TRENCH SHOULD BE SPRAYED WITH MONTH, DAY, AND YEAR WHEN THE PERMANENT REPAIR WAS COMPLETED.
8. ALL MATERIALS AND EQUIPMENT SHALL BE IN CONFORMANCE WITH THE LATEST REVISION OF PADOT FORM 408.

ANY EXCAVATION IN NORTH LEBANON TOWNSHIP RIGHT-OF-WAY MUST BE SCHEDULED WITH THE ROAD FOREMAN (273-7132) PRIOR TO COMMENCEMENT OF WORK. ANY WORK DONE WITHOUT THE PRIOR APPROVAL FROM NORTH LEBANON TOWNSHIP WILL BE SUBJECT TO THE ROAD FOREMAN'S DISCRETION FOR ACCEPTANCE. THE ROAD FOREMAN, OR DESIGNEE, MUST BE NOTIFIED OF START DATE AND MUST BE ON SITE DURING ALL STONE FILL OPERATIONS, PAVING OF BINDER AND WEARING COURSE, IN ORDER TO SIGN OFF ON STREET CUT PERMIT.

STREET CUT SPECIFICATION DETAIL

NOT TO SCALE

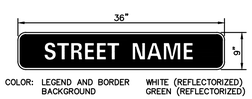

COLOR: LEGEND AND BORDER BACKGROUND — WHITE (REFLECTORIZED) GREEN (REFLECTORIZED)

NOTES:
1. SIGN CODES REFERENCED IN THESE PLANS ARE PER SIGN STANDARDS OF THE "MANUAL ON UNIFORM TRAFFIC CONTROL DEVICES".
2. ACTUAL SIZE & STYLE MAY VARY BASED ON NORTH LEBANON TOWNSHIP'S PREFERENCE.
3. SIGN SHALL BE 0.080" ALUMINUM WITH HIGH RETRO-REFLECTIVE TYPE 3 SHEETING.

STREET NAME SIGN – D3-1

NOT TO SCALE

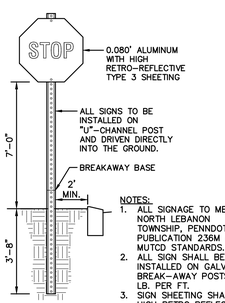

NOTES:
1. ALL SIGNAGE TO MEET NORTH LEBANON TOWNSHIP, PENNDOT PUBLICATION 236M AND MUTCD STANDARDS.
2. ALL SIGN SHALL BE INSTALLED ON GALVANIZED BREAK-AWAY POSTS AT 2 LB. PER FT.
3. SIGN SHEETING SHALL BE HIGH RETRO REFLECTIVE.

SIGN POST DETAIL

NOT TO SCALE

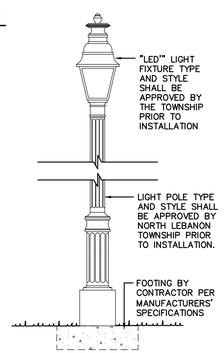

"LED" STREET LIGHT DETAIL

NOT TO SCALE



COLOR: LEGEND AND BORDER BACKGROUND — BLACK WHITE (REFLECTORIZED)

NOTES:
1. SIGN CODES REFERENCED IN THESE PLANS ARE PER SIGN STANDARDS OF THE "MANUAL ON UNIFORM TRAFFIC CONTROL DEVICES".
2. ACTUAL SIZE & STYLE MAY VARY BASED ON NORTH LEBANON TOWNSHIP'S PREFERENCE.
3. SIGN SHALL BE 0.080" ALUMINUM WITH HIGH RETRO-REFLECTIVE TYPE 3 SHEETING.

SPEED LIMIT SIGN – R2-1

NOT TO SCALE



COLOR: LEGEND AND BORDER BACKGROUND — WHITE (REFLECTORIZED) RED (REFLECTORIZED)

NOTES:
1. SIGN CODES REFERENCED IN THESE PLANS ARE PER SIGN STANDARDS OF THE "MANUAL ON UNIFORM TRAFFIC CONTROL DEVICES".
2. SIGN SHALL BE 0.080" ALUMINUM WITH HIGH RETRO-REFLECTIVE TYPE 3 SHEETING.

STOP SIGN – R1-1

NOT TO SCALE

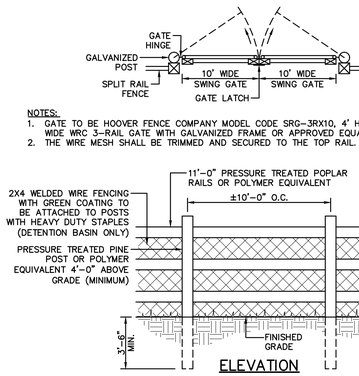

NOTES:
1. GATE TO BE HOOVER FENCE COMPANY MODEL CODE SRG-3RX10, 4' HIGH X 10' WIDE WRC 3-RAIL GATE WITH GALVANIZED FRAME OR APPROVED EQUAL
2. THE WIRE MESH SHALL BE TRIMMED AND SECURED TO THE TOP RAIL.

SPLIT RAIL FENCE DETAIL

NOT TO SCALE

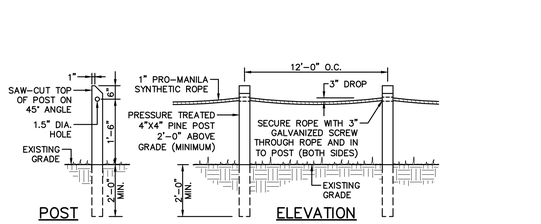

RIPARIAN BARRIER DETAIL

NOT TO SCALE

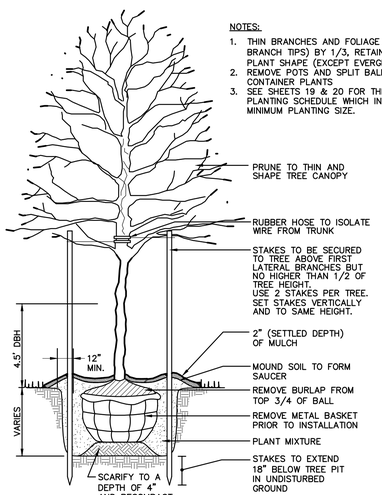

NOTES:
1. THIN BRANCHES AND FOLIAGE (NOT ALL BRANCH TIPS) BY 1/3, RETAINING NORMAL PLANT SHAPE (EXCEPT EVERGREEN).
2. REMOVE POTS AND SPLIT BALLS WITHIN CONTAINER PLANTS
3. SEE SHEETS 19 & 20 FOR THE STREET TREE PLANTING SCHEDULE WHICH INCLUDES THE MINIMUM PLANTING SIZE.

DECIDUOUS TREE PLANTING

NOT TO SCALE

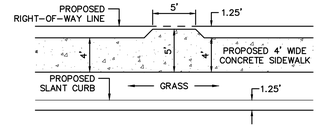

ADA PASS-BY AREA (PB-1)

NOT TO SCALE

NO.	DATE	REVISION
2	4-25-22	REVISED PER N.T. LEB. CO. ENGINEER & CITY OF LEB. AUTHORITY
1	2-1-22	REVISED PER N.T. LEB. CO. ENGINEER, LCPD, NLTMA, & CITY OF LEB. AUTHORITY

FOR PIONEER MANAGEMENT BY:

MANAGER: JAMES C. HENKE
SURV. CHIEF: RC
FIELDBOOK NO. VALUE
DESIGN BY: JDB/KWG
CHKD BY: JDB/JCH
DRAWN BY: RC
CHKD BY: RC
DRAWING REFERENCE: F:\12\12-0950-02\CAD\Final-Ph4\Details.dwg
XREFS: TB [F:\12\12-0950-02\CAD\Final-Ph4\V-xref\TB.dwg]

CLIENT
LANDMARK HOMES AT SWEETBRIAR
c/o MR. CLIFF WEAVER
1737 WEST MAIN STREET
EPHRATA, PA 17522
(717) 733-1536

SCALE: AS NOTED

PIONEER Management, LLC
111 Millersville Road, Lancaster, PA 17603
Phone: (717) 435-8300 Fax: (717) 481-4955
Email: jb@pioneermanagementllc.com
Website: www.pioneermanagementllc.com

SITE CONSTRUCTION DETAILS
FINAL PHASE 4 & REVISED FINAL PHASE 3 SUBDIVISION PLAN
FOR
THE CROSSINGS AT SWEET BRIAR
NORTH LEBANON TOWNSHIP LEBANON COUNTY, PA.

DATE: JUNE 25, 2021
SHEET NO. 40 OF 43
DWG. NO. 12-0950-02-F

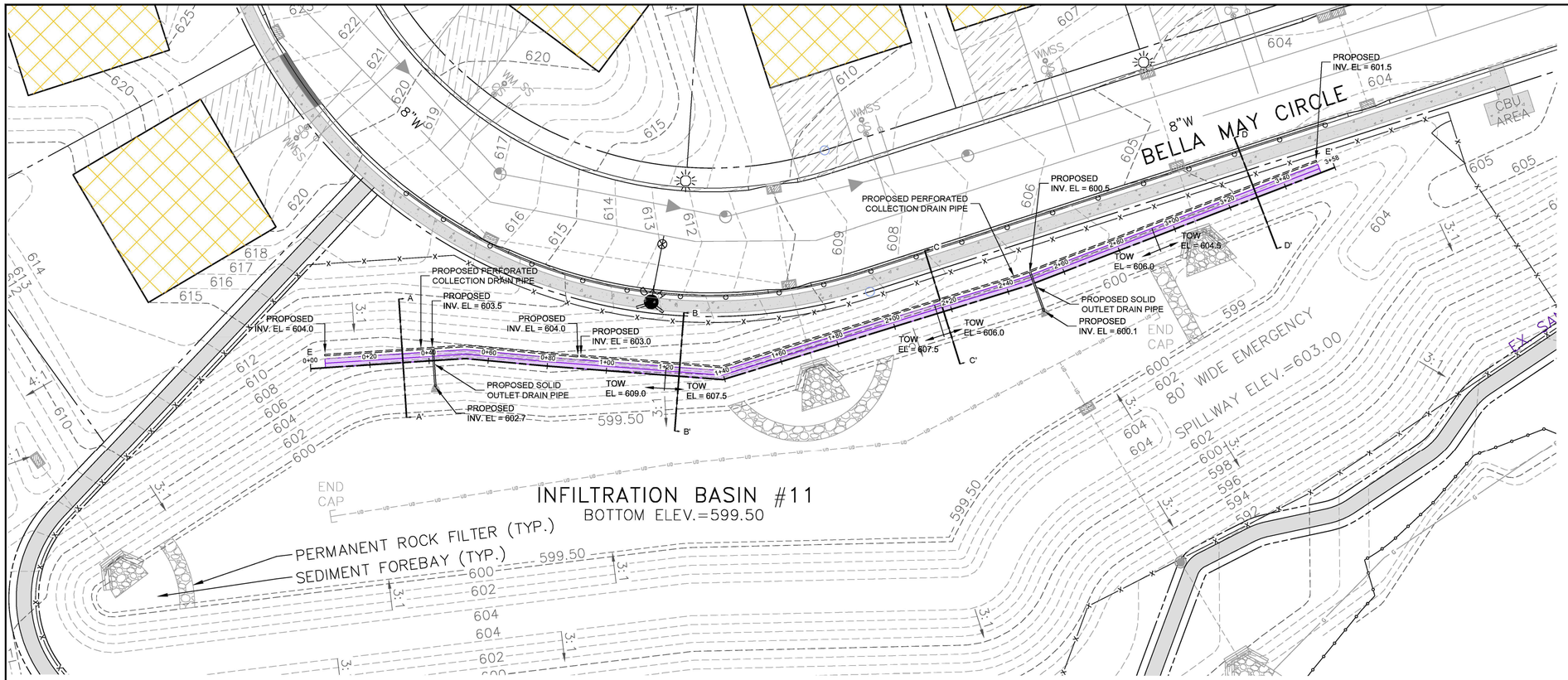

PLAN VIEW

HORIZONTAL SCALE IN FEET: 0, 20, 40, 60

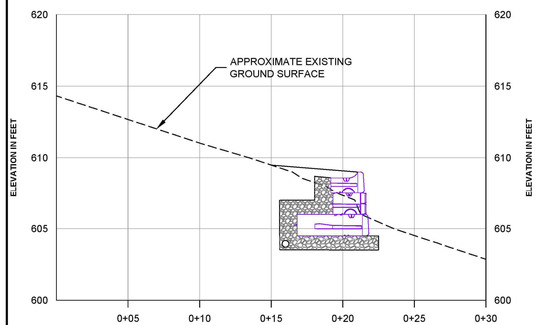

SECTION A-A'

HORIZONTAL SCALE IN FEET: 0, 5, 10, 15
VERTICAL SCALE IN FEET: 0, 5, 10, 15

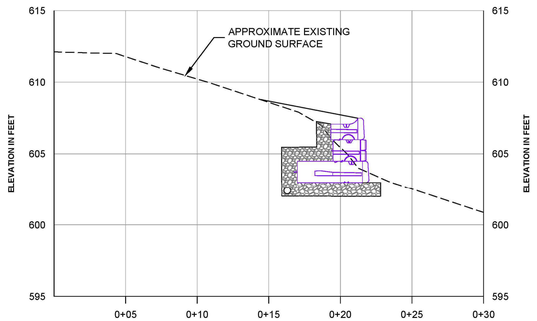

SECTION B-B'

HORIZONTAL SCALE IN FEET: 0, 5, 10, 15
VERTICAL SCALE IN FEET: 0, 5, 10, 15

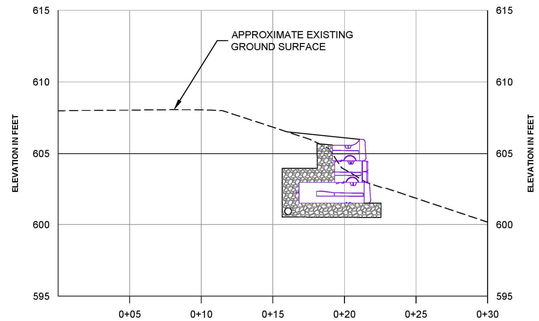

SECTION C-C'

HORIZONTAL SCALE IN FEET: 0, 5, 10, 15
VERTICAL SCALE IN FEET: 0, 5, 10, 15

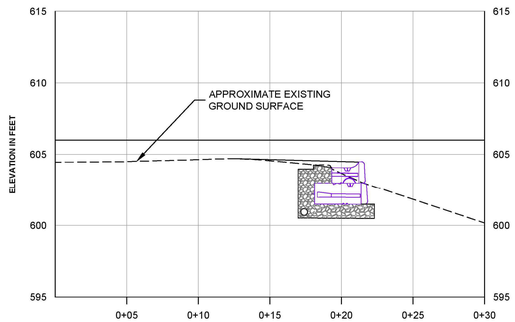

SECTION D-D'

HORIZONTAL SCALE IN FEET: 0, 5, 10, 15
VERTICAL SCALE IN FEET: 0, 5, 10, 15

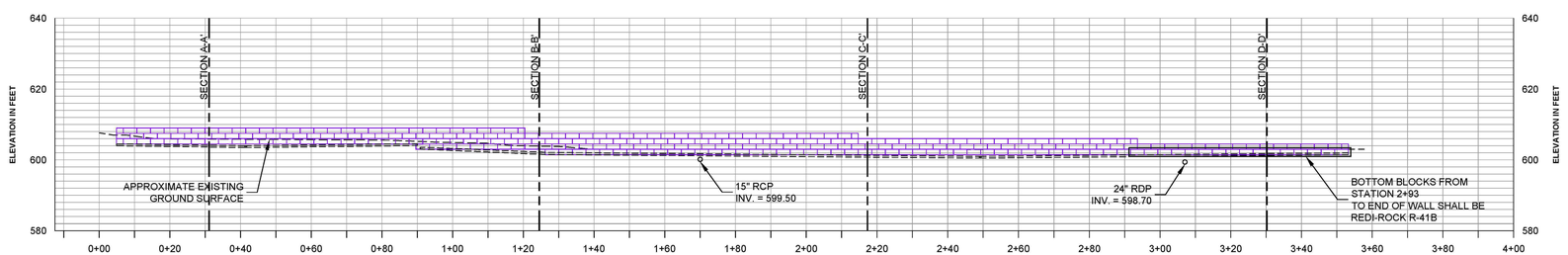

SECTION E-E'

HORIZONTAL SCALE IN FEET: 0, 20, 40, 60
VERTICAL SCALE IN FEET: 0, 20, 40, 60

REGISTERED PROFESSIONAL
WADE TIMOTHY ANUNDSON
ENGINEER
No. 061374
COMMONWEALTH OF PENNSYLVANIA

This drawing, its contents, and each component of this drawing are the property of and proprietary to ARM Group LLC and shall not be reproduced or used in any manner except for the purpose identified on the Title Block, and only by or on behalf of this client for the identified project unless otherwise authorized by the express, written consent of ARM Group LLC.

ARM Group LLC
Engineers and Scientists
www.armgroup.net

NO.	DATE	REVISION
2	4-25-22	REVISED PER N.T. LEB. CO. ENGINEER & CITY OF LEB. AUTHORITY
1	2-1-22	REVISED PER N.T. LEB. CO. ENGINEER, LCPD, NLTMA, & CITY OF LEB. AUTHORITY

FOR PIONEER MANAGEMENT BY:

FIELDBOOK NO.: VALUE
SURV. CHIEF: RC
DRAWN BY: RC
CHKD BY: RC
MANAGER: JAMES C. HENKE
DESIGN BY: JDB/KWG
CHKD BY: JDB/JCH
DRAWING REFERENCE: F:\12\12-0950-02\CAD\Final-PHASE\Details.dwg
XREFS: TB: [F:\12\12-0950-02\CAD\Final-PHASE\Title.dwg]

CLIENT
LANDMARK HOMES AT SWEETBRIAR
c/o MR. CLIFF WEAVER
1737 WEST MAIN STREET
EPHRATA, PA 17522
(717) 733-1536

SCALE: AS NOTED

PIONEER Management, LLC
111 Millersville Road, Lancaster, PA 17603
Phone: 717-435-8304 Fax: 717-481-4955
Email: JW@pioneermanagementllc.com
Website: www.pioneermanagementllc.com

RETAINING WALL DESIGNS
FINAL PHASE 4 & REVISED FINAL PHASE 3 SUBDIVISION PLAN
FOR
THE CROSSINGS AT SWEET BRIAR
NORTH LEBANON TOWNSHIP LEBANON COUNTY, PA

DATE: JUNE 25, 2021
SHEET NO. 40A OF 43
DWG. NO. 12-0950-02-F

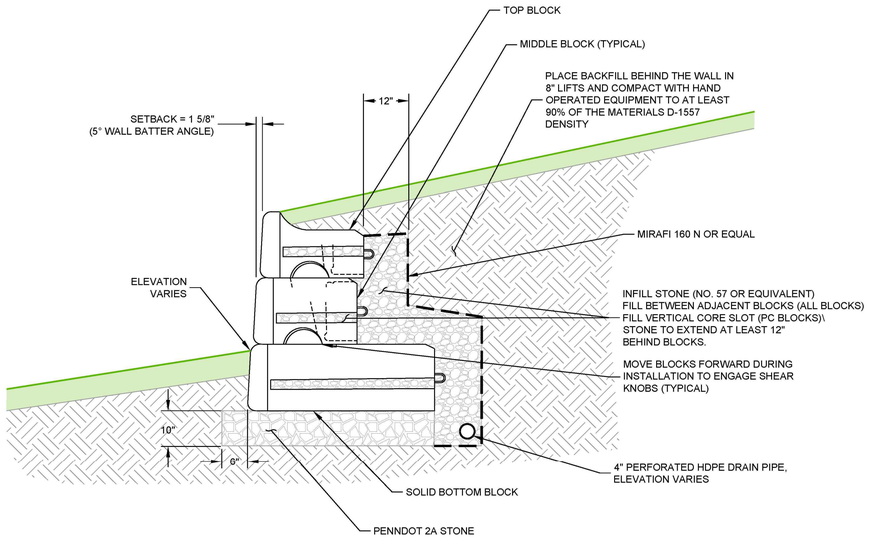

1 / - DETAIL
TYPICAL THREE BLOCK SECTION
NOT TO SCALE

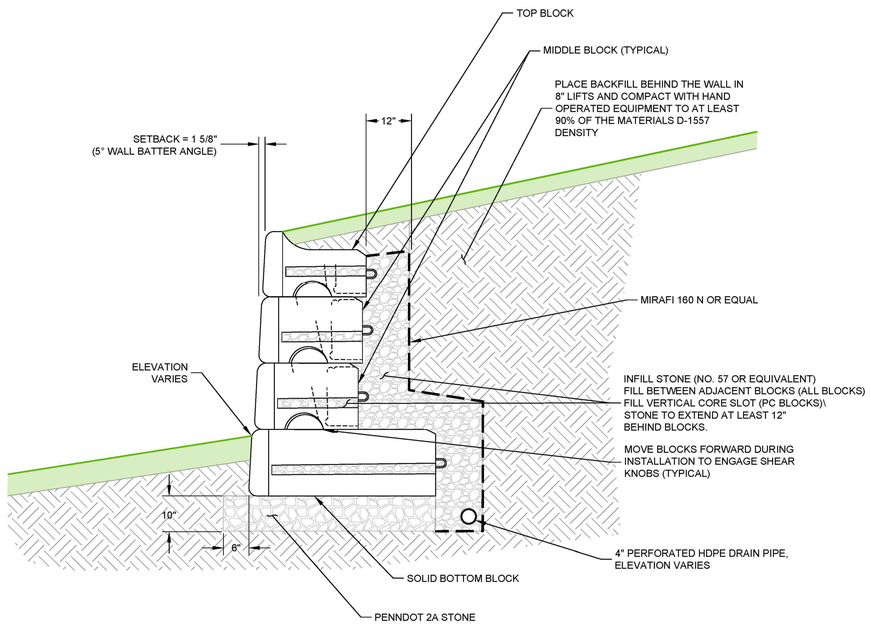

2 / - DETAIL
TYPICAL FOUR BLOCK SECTION
NOT TO SCALE

NOTES:

1. INSTALLATION SHALL BE IN ACCORDANCE WITH THE REDI-ROCK INSTALLATION GUIDE (WWW.REDI-ROCK.COM) EXCEPT AS MODIFIED HEREIN.
2. SUBGRADE SOILS BELOW THE LEVELING PAD SHALL BE FIRM AND SHALL BE COMPACTED TO A MINIMUM DENSITY OF 92% OF THE SOIL'S MAXIMUM DENSITY PER ASTM D1557, AT +/- 3% OF OPTIMUM MOISTURE.
3. LEVELING PAD SHALL BE COMPACTED TO A MINIMUM DENSITY OF 92% OF THE SOIL'S MAXIMUM DENSITY PER ASTM D1557, AT +/- 3% OF OPTIMUM MOISTURE.
4. BLOCKS SHALL CONFORM TO THE REDI-ROCK SPECIFICATIONS. TOP BLOCKS SHALL BE REDI-ROCK R-28T. MIDDLE BLOCKS SHALL BE REDI-ROCK R-28M. BOTTOM BLOCKS SHALL BE REDI-ROCK R-60B, EXCEPT AS NOTED ON THE PROFILE OF THE WALL (SECTION E-E', SHEET 1).
5. SUBMITTALS: SUBMIT PROPOSED DRAIN PIPE AND AGGREGATE MATERIALS TO ENGINEER FOR REVIEW ONE WEEK PRIOR TO CONSTRUCTION.
6. THESE RETAINING WALL DETAILS AND NOTES RELY ON COMPETENT PROFESSIONAL ENGINEERING OVERSIGHT, TESTING AND OBSERVATION DURING CONSTRUCTION, AND VERIFICATION OF ACCEPTABLE SUBSURFACE CONDITION, MATERIAL TYPES AND CONSTRUCTION METHODS. IF SOIL OR OTHER PROPERTIES VARY FROM THOSE USED FOR DESIGN, DESIGN REVISIONS SHOULD BE MADE AS NECESSARY PER THE ENGINEER. DESIGN ASSUMPTIONS INCLUDE A MOIST UNIT WEIGHT OF 120 PCF FOR THE IN-PLACE SOILS AND AN IN-PLACE FRICTION ANGLE OF 30°.
7. INSPECTION SERVICES ARE REQUIRED FOR THE FOLLOWING:
   - 7.a. VERIFICATION OF WALL, SOIL, AND AGGREGATE MATERIALS
   - 7.b. VERIFICATION OF SUBGRADE AND LEVELING PAD COMPACTION
   - 7.c. PERIODIC INSPECTION OF THE WALL CONSTRUCTION
8. INSPECTION SERVICE REPORTS TO BE PROVIDED TO NORTH LEBANON TOWNSHIP AND THE LCPD.

COMMONWEALTH OF PENNSYLVANIA
REGISTERED PROFESSIONAL
WADE TIMOTHY ANUNDSON
ENGINEER
No. 061374

Wade Anundson

This drawing, its contents, and each component of this drawing are the property of and proprietary to ARM Group LLC and shall not be reproduced or used in any manner except for the purpose identified on the Title Block, and only by or on behalf of this client for the identified project unless otherwise authorized by the express, written consent of ARM Group LLC.

ARM Group LLC
Engineers and Scientists
www.armgroup.net

NO.	DATE	REVISION
2	4-25-22	REVISED PER N.T. LEB. CO. ENGINEER & CITY OF LEB. AUTHORITY
1	2-1-22	REVISED PER N.T. LEB. CO. ENGINEER, LCPD, NLTMA, & CITY OF LEB. AUTHORITY

MANAGER: JAMES C. HENKE
DESIGN BY: JDB/KWG
CHKD BY: JDB/JCH
SURV. CHIEF: RC
DRAWN BY: RC
CHKD BY: RC
FIELDBOOK NO. VALUE
FOR PIONEER MANAGEMENT BY:
DRAWING REFERENCE: F:\12\12-0950-02\CAD\Xtras-PA\Details.dwg
XREFS: TB [F:\12\12-0950-02\CAD\Xtras-PA\XA-work\TB.dwg]

CLIENT
LANDMARK HOMES AT SWEETBRIAR
c/o MR. CLIFF WEAVER
1737 WEST MAIN STREET
EPHRATA, PA 17522
(717) 733-1536

SCALE AS NOTED

PIONEER Management, LLC
111 Millersville Road, Lancaster, PA 17603
Phone: (717) 481-1555 Fax: (717) 481-4955
Email: jdb@pioneermanagementllc.com
Website: www.pioneermanagementllc.com

RETAINING WALL DESIGNS
FINAL PHASE 4 & REVISED FINAL PHASE 3 SUBDIVISION PLAN
FOR
THE CROSSINGS AT SWEET BRIAR
NORTH LEBANON TOWNSHIP LEBANON COUNTY, PA

DATE: JUNE 25, 2021
SHEET NO. 40B OF 43
DWG. NO. 12-0950-02-F

F:\12\12-0950-02\CAD\Final-Ph4\Details.dwg, 41 STORMWATER DETAILS, 6/7/2022 2:27:50 PM, 1:1

PIPE DIAMETER	A	B	C
30" AND LESS	4'	5"	6"

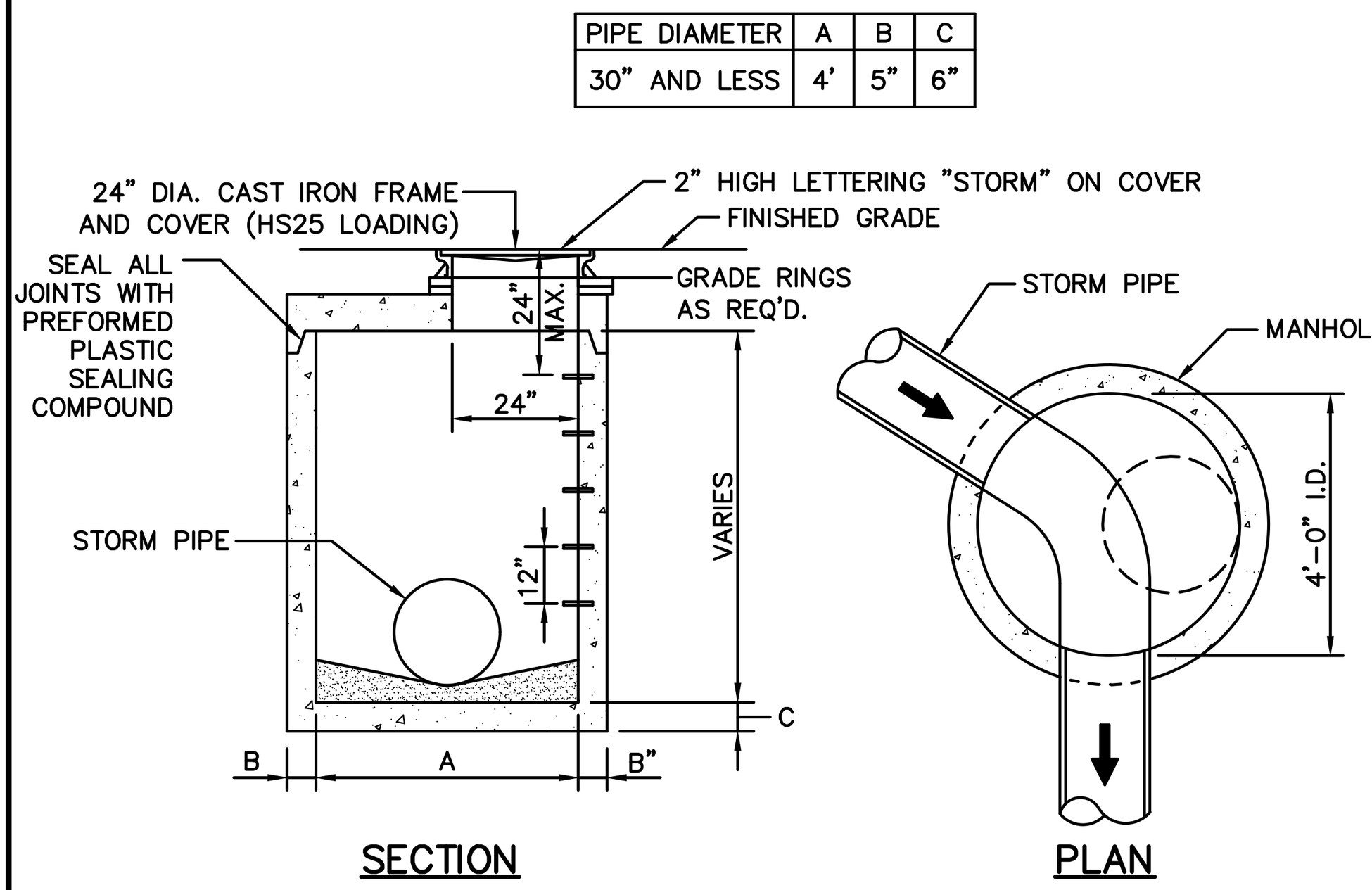

NOTE:
SEE STORM SEWER STRUCTURE NOTES ON THIS SHEET.

STORM MANHOLE (RC-39)

NOT TO SCALE

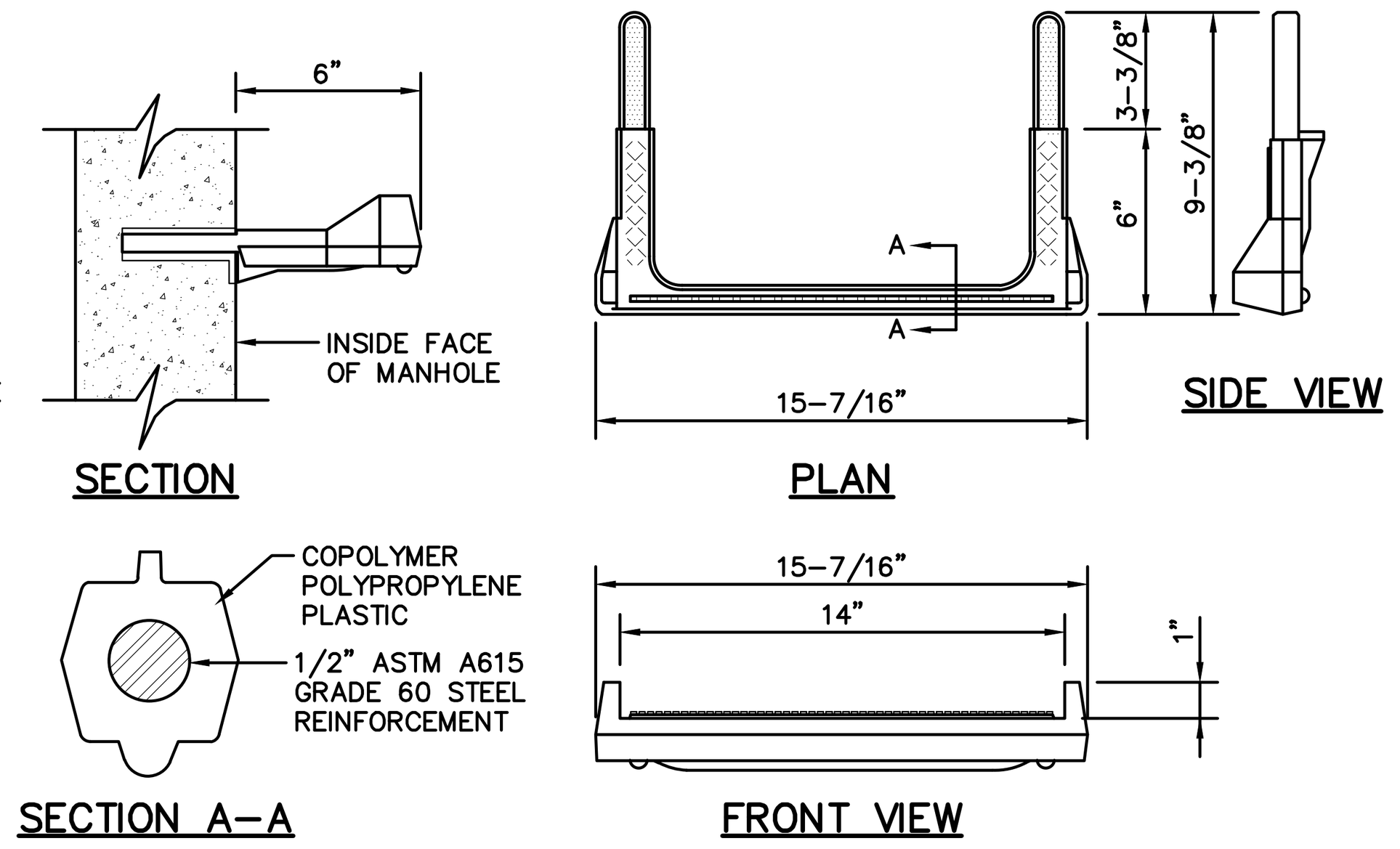

NOTES:
1. ATTACH INSERTS USING MANUFACTURER'S INSTRUCTIONS AND SPECIFICATIONS.
2. DRIVE STEP INTO INSERTS UNTIL BOTH LEGS ARE COMPLETELY SEATED.
3. STEP MEETS OR EXCEEDS ASTM C-478 AND OSHA STANDARDS WHEN PROPERLY INSTALLED.
4. ALL INLETS AND STORM MANHOLES OVER 4' IN DEPTH SHALL BE PROVIDED WITH STEPS FOR ACCESSIBILITY.

POLYPROPYLENE STEP DETAIL

NOT TO SCALE

SOIL AMENDMENT CONSTRUCTION SPECIFICATIONS (BMP)

1. USE COMPOST CERTIFIED BY THE US COMPOSTING COUNCIL'S SEAL OF TESTING PROGRAM. CONSIDER USING COMPOST BY LAUREL VALLEY ORGANICS (1-866-587-6457, WWW.LAURELVALLEYSOILS.COM).
2. ALL AREAS SHOWN ON THIS PLAN SHALL HAVE COMPOST APPLIED TO AMEND THE TOPSOIL. ALL ROUGH GRADING SHALL BE COMPLETED BEFORE AMENDING THE TOPSOIL.
3. BEFORE PLACING THE TOPSOIL, THE SUBSOIL SHALL BE IN A LOOSE, FRIABLE CONDITION TO A DEPTH OF 6 TO 12 INCHES BELOW SUBGRADE. THIS CAN BE ACHIEVED BY SCARIFYING OR RIPPING ALONG THE CONTOUR. DO NOT PERFORM THESE OPERATIONS WITHIN THE DRIPLINE OF ANY EXISTING TREES, WITHIN PREVIOUSLY STABILIZED SWALES, WHERE COMPACTION IS BY DESIGN, OR ON INACCESSIBLE SLOPES.
4. AMEND TOPSOIL BY MIXING COMPOST INTO STOCKPILED TOPSOIL. MIX AT A RATIO OF 20-30% COMPOST TO 70-80% TOPSOIL AND THEN SPREAD ONTO LOT AT A MINIMUM DEPTH OF 6 INCHES (OR AS SPECIFIED WITHIN BASIN DETAIL). IMMEDIATELY STABILIZE WITH SEED AND MULCH.

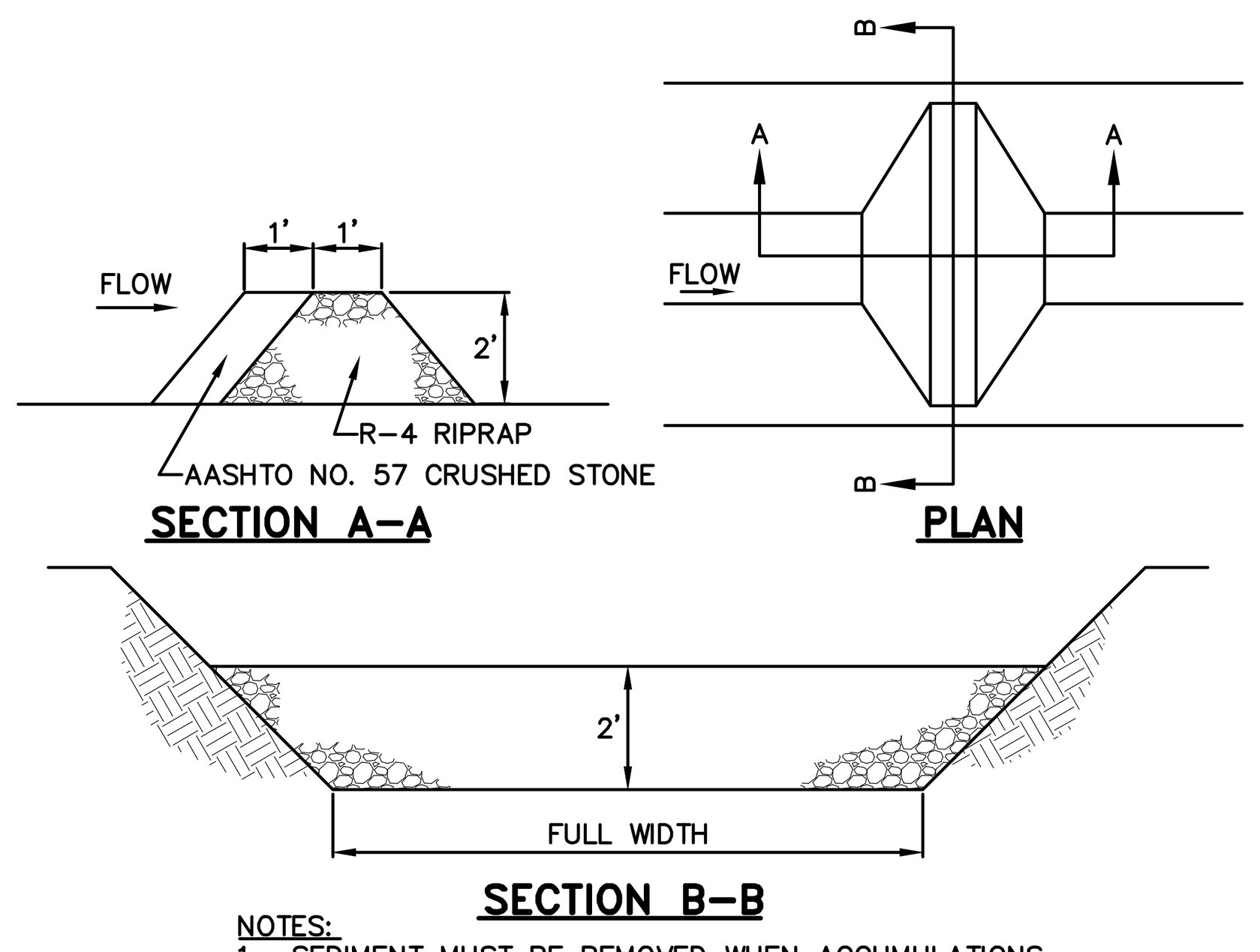

NOTES:
1. SEDIMENT MUST BE REMOVED WHEN ACCUMULATIONS REACH 6" BEHIND THE FILTER.

PERMANENT ROCK FILTER

NOT TO SCALE

OUTLET NO.	PIPE DIA (IN) Pd	RIPRAP SIZE	RIPRAP THICK. Rt (IN)	APRON LENGTH Al (FT)	APRON TERMINAL WIDTH Atw (FT)
EW-88	15	R-5	27	13	16.75
EW-98	24	R-6	36	21	27
EW-106	15	R-4	18	10	13.75
EW-110	24	R-4	18	12	18
EW-120	24	R-4	18	15	21
EW-121	24	R-5	27	17	23

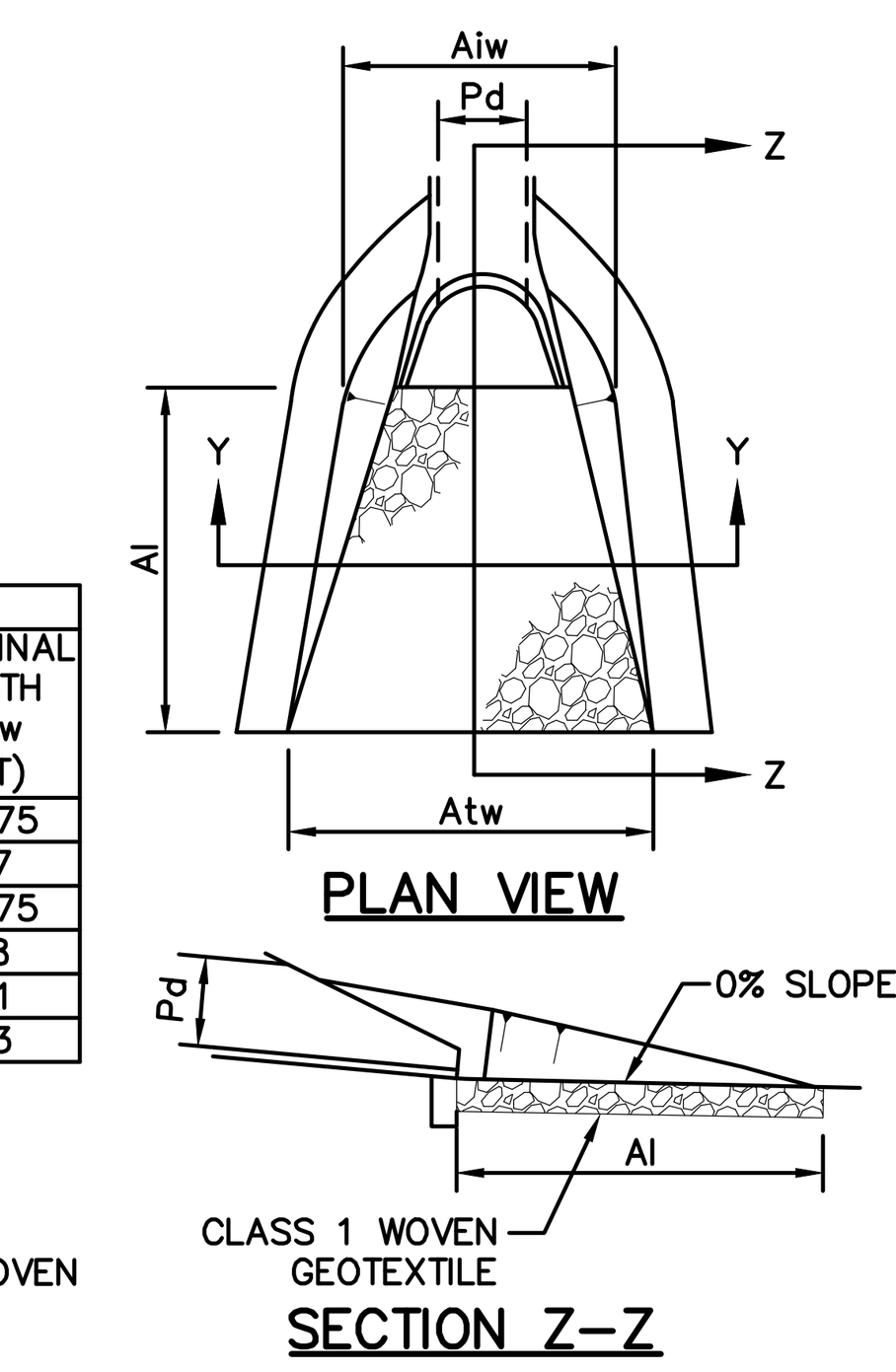

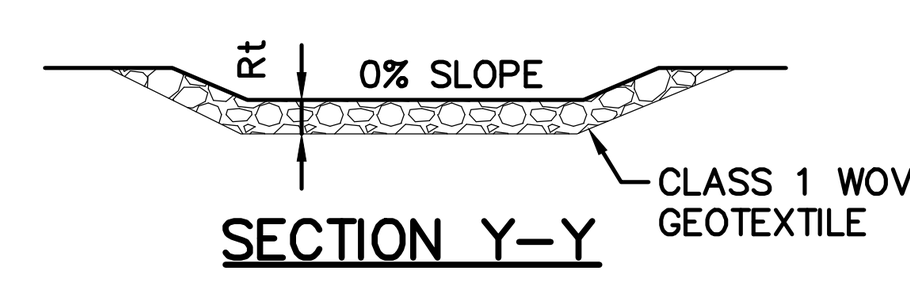

NOTES:
1. ALL APRONS SHALL BE CONSTRUCTED TO THE DIMENSIONS SHOWN. TERMINAL WIDTHS SHALL BE ADJUSTED AS NECESSARY TO MATCH RECEIVING CHANNELS.
2. ALL APRONS SHALL BE INSPECTED AT LEAST WEEKLY AND AFTER EACH RUNOFF EVENT. DISPLACED RIPRAP WITHIN THE APRON SHALL BE REPLACED IMMEDIATELY.

RIP-RAP AT PIPE OUTLET WITH ENDWALL

NOT TO SCALE

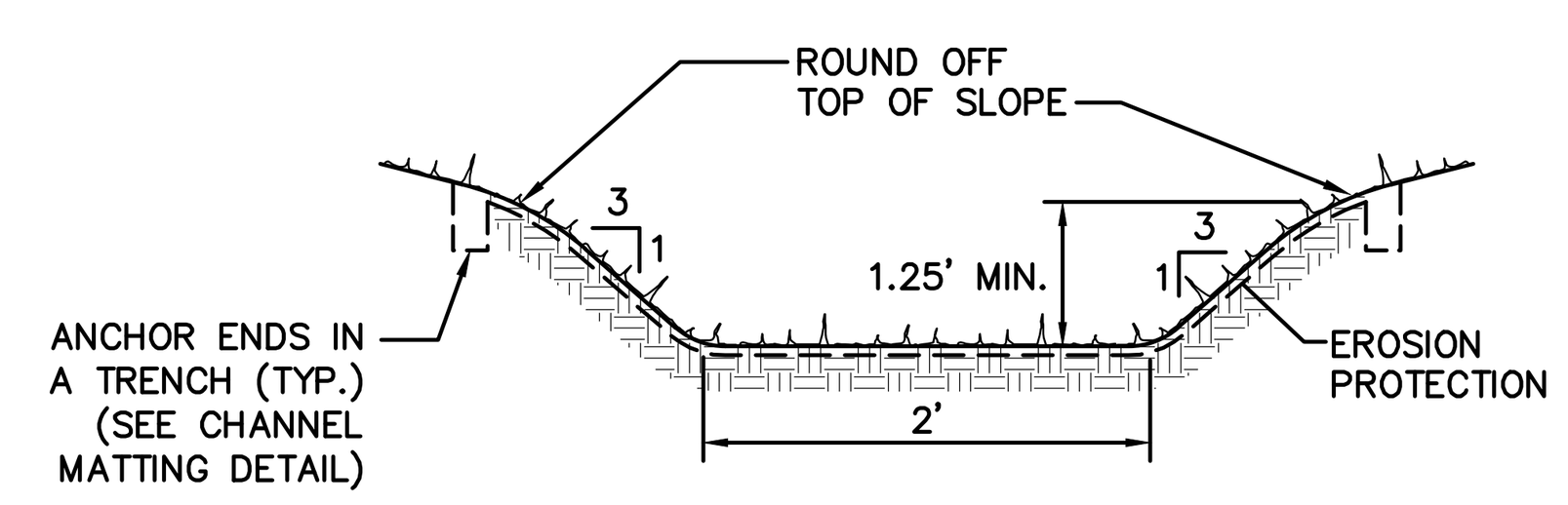

SWALE SIZING SCHEDULE			
SWALE	MIN. SLOPE	MAX. SLOPE	EROSION PROTECTION
7	2.7%	3.5%	NAG S75, 8' WIDE, STAPLE "D"

TRAPEZOIDAL SWALE (BMP)

NOT TO SCALE

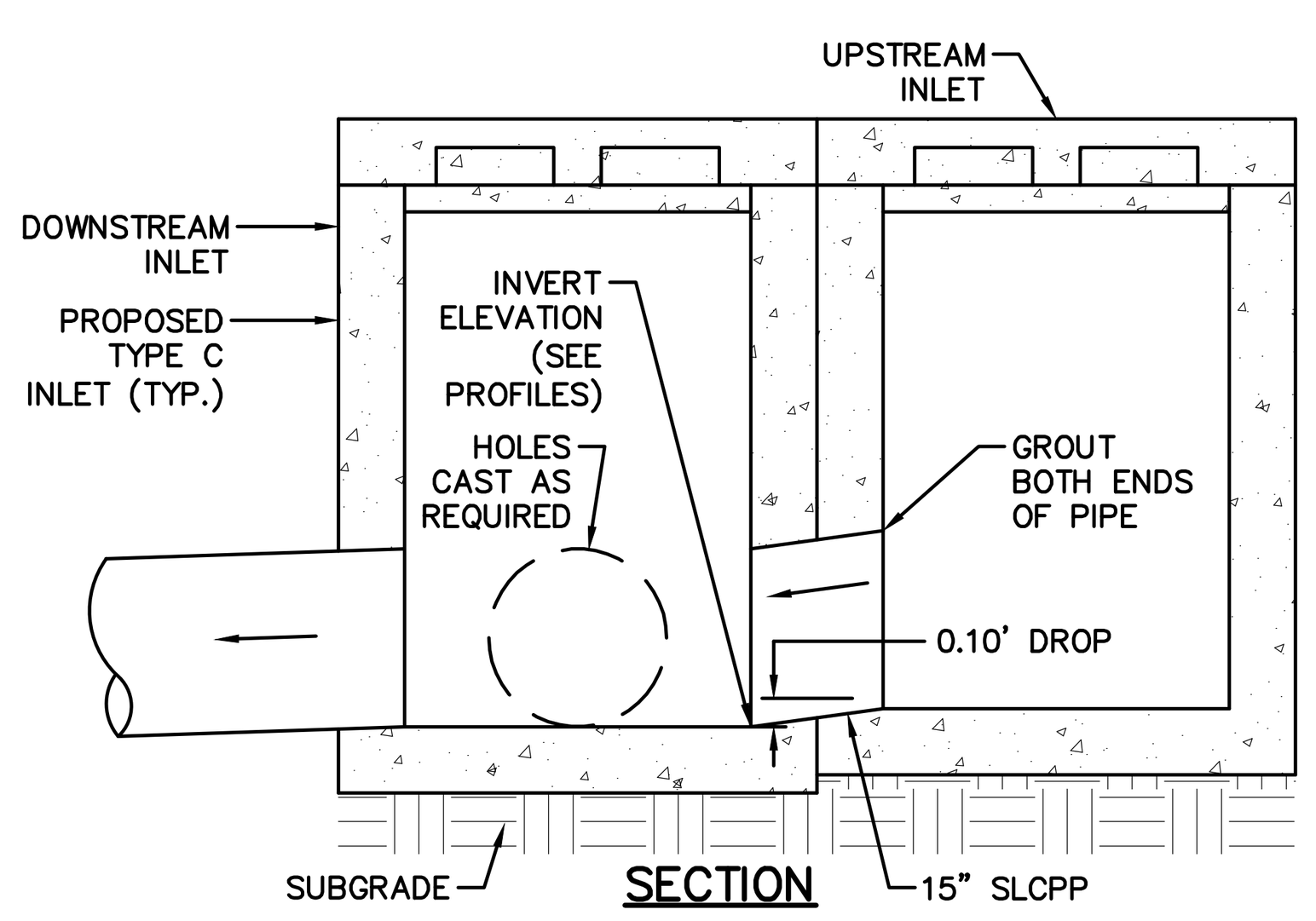

NOTE:
SEE STORM SEWER STRUCTURE NOTES ON THIS SHEET.

DOUBLE INLET DETAIL

NOT TO SCALE



NOTES:
1. SUGGESTED MANUFACTURER: "BERNTSEN" (www.berntsen.com/1-800-518-0934) OR APPROVED EQUAL.
2. MARKER SHALL BE ATTACHED TO THE FOLLOWING STRUCTURES (ATTACH WITH EPOXY IN ACCORDANCE WITH MANUFACTURER'S DIRECTIONS):
   - TYPE C INLETS (AFFIXED TO TOP OF CURB, FACING STREET)
   - TYPE M INLETS (AFFIXED TO TOP OF STRUCTURE ON ANY SIDE)
   - HEADWALLS (AFFIXED TO TOP OF STRUCTURE, CENTERED OVER OPENING)
3. SEE NOTES ON RIGHT-OF-WAY IMPROVEMENTS AND OTHER RELATED SPECIFICATIONS (FROM NLT RESOLUTION NO. 10-2017) - SECTION 115 ON SHEET 2.

INLET/HEADWALL MARKER

NOT TO SCALE

* SUITABLE MATERIAL = MATERIAL CONTAINING NO DEBRIS, ORGANIC MATTER, FROZEN MATERIAL OR LARGE STONES WITH A DIAMETER GREATER THAN ONE-HALF THE THICKNESS OF THE COMPACTED LAYERS BEING PLACED.

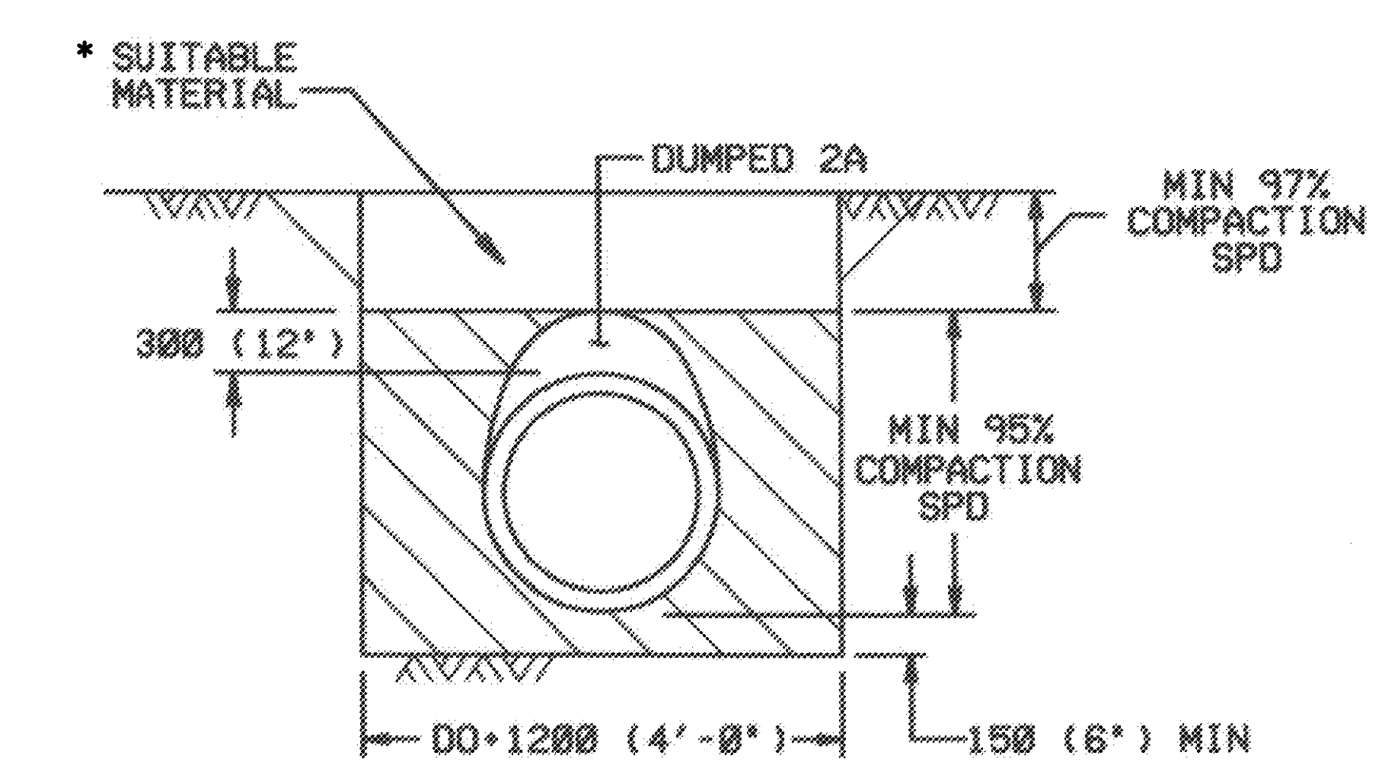

THERMOPLASTIC PIPE (RC-30M)

PLACE 2A COARSE AGGREGATE MATERIAL, IN LIFTS 100 (4") THICK, ADJACENT TO THE LOWER HAUNCHES TO A HEIGHT OF 300 (12") ABOVE TOP OF PIPE. COMPACT TO 95% SPD. TEST THE BACKFILL MATERIAL AND CONTINUE EMBANKMENT IN ACCORDANCE WITH PUBLICATION 408, SECTION 601.

PIPE DIA.	L	W	A
15" & 18"	4.0'	4.0'	12"
24"	4.6'	4.25'	12"
36"	5.8'	4.6'	12"
42"	6.3'	5.8'	12"
48"	6.9'	6.9'	12"
54"	7.5'	8.0'	12"
60"	8.1'	9.2'	15"
72"	9.2'	11.5'	15"

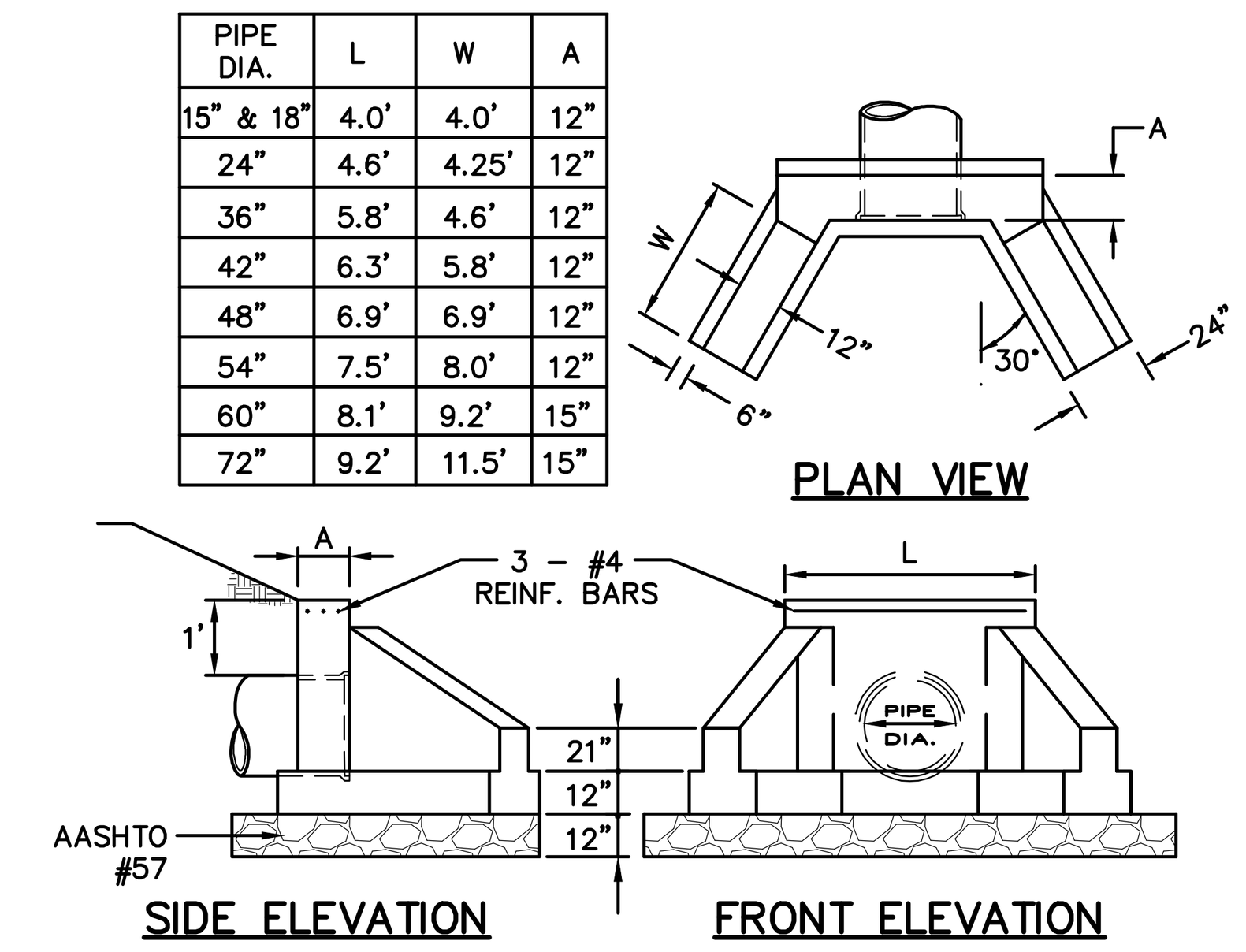

NOTE:
SEE STORM SEWER STRUCTURE NOTES ON THIS SHEET.

TYPE D-W HEADWALL/ENDWALL (RC-31)

NOT TO SCALE

PRE-CAST CONCRETE STORMWATER INLET NOTES

SECTION 105-PRE-CAST CONCRETE WATER INLETS
1. STORMWATER INLETS SHALL BE MANUFACTURED AS PER THE LATEST VERSION OF THE PENNDOT, SPECIFICATIONS, PUBLICATION 408, SECTION 714 & THE LATEST VERSION PENNDOT BUREAU OF HIGHWAY DESIGN, STANDARDS FOR ROADWAY CONSTRUCTION, RC-34.
2. GRADE ALL ADJUSTMENT RINGS SHALL BE CAST IN PLACE OR CONFORM TO CURRENT SPECIFICATIONS AS DETAILED IN PENNDOT PUBLICATION 72, RC-34M. THE ALTERNATE USE OF CAST IN PLACE ADJUSTMENT RINGS SHALL BE APPROVED BY THE TOWNSHIP ROAD FOREMAN.
3. BLENDCRETE NON-SHRINKING GROUT, OR EQUAL SHALL BE USED TO GROUT ALL PIPES PROTRUDING FROM STRUCTURE, GROUT TO BE PLACED INSIDE & OUTSIDE OF STRUCTURE.

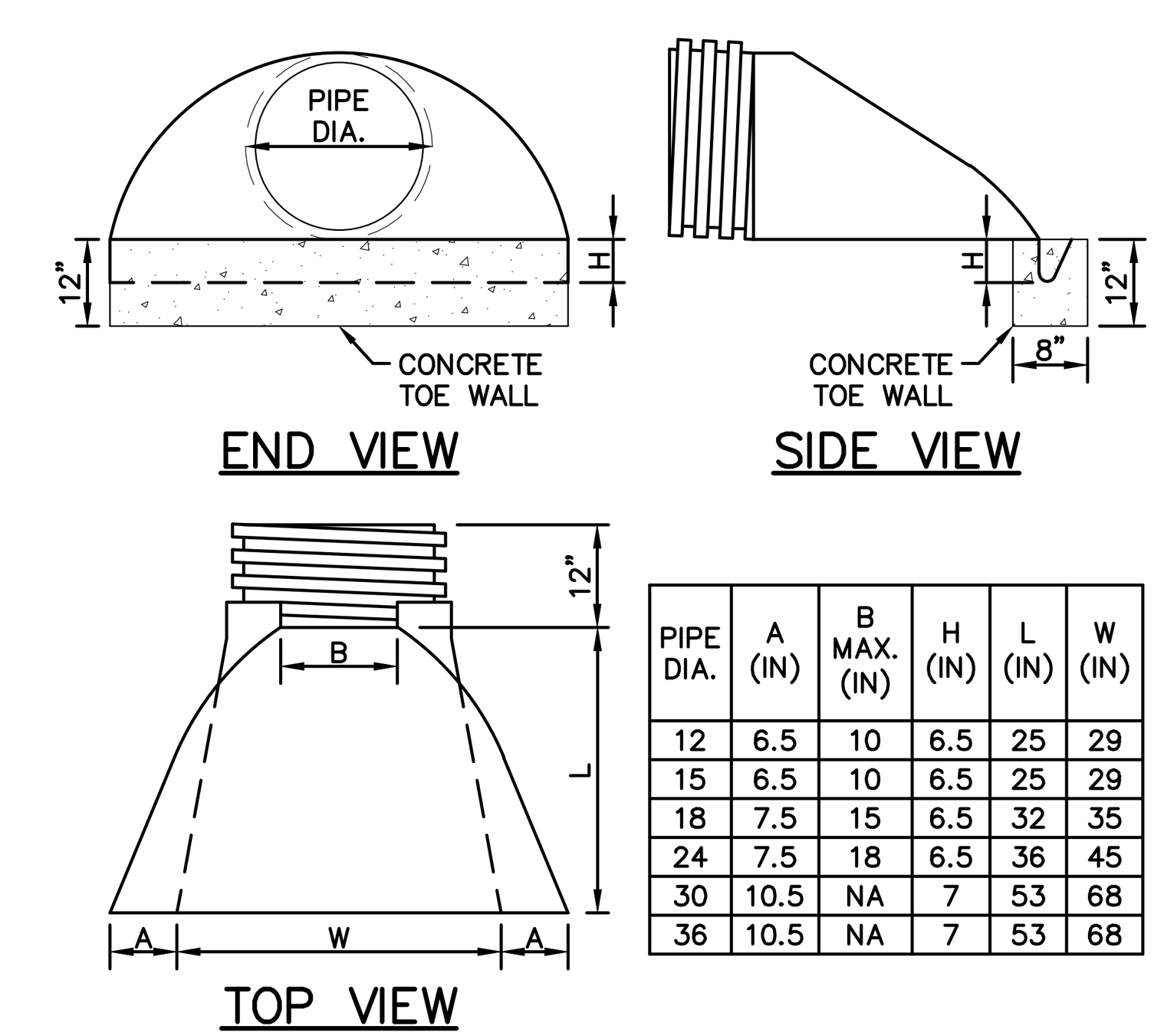

PIPE DIA.	A (IN)	B MAX. (IN)	H (IN)	L (IN)	W (IN)
12	6.5	10	6.5	25	29
15	6.5	10	6.5	25	29
18	7.5	15	6.5	32	35
24	7.5	18	6.5	36	45
30	10.5	NA	7	53	68
36	10.5	NA	7	53	68

PLASTIC FLARED END SECTION

NOT TO SCALE

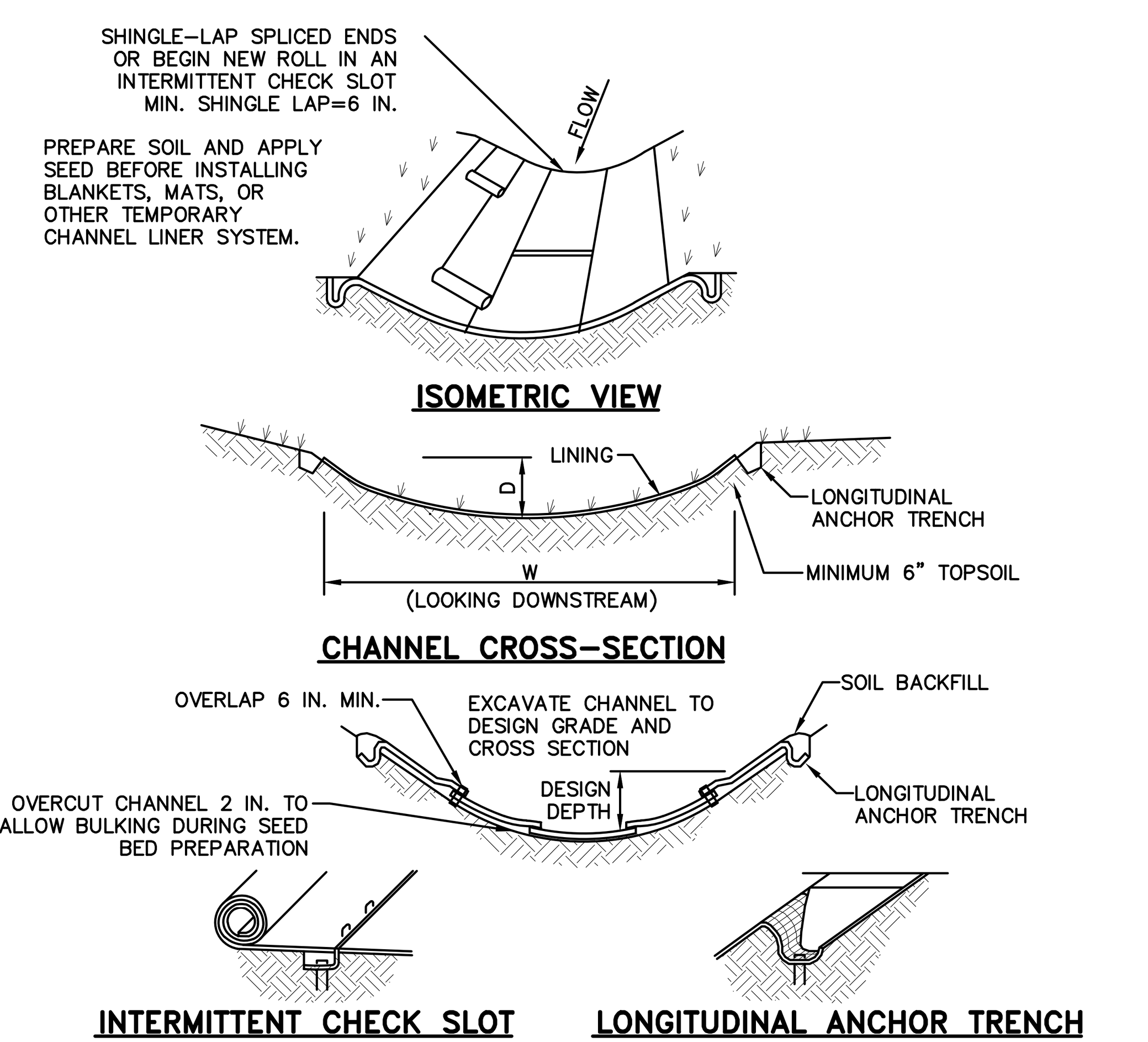

SEE MANUFACTURER'S LINING INSTALLATION DETAIL FOR STAPLE PATTERNS, VEGETATIVE STABILIZATION FOR SOIL AMENDMENTS, SEED MIXTURES AND MULCHING INFORMATION

CHANNEL NO.	DEPTH D (FT)	WIDTH W (FT)	MIN. SLOPE	MAX. SLOPE	LINING	STAPLE PATTERN
8	1.25	12	4.00	12.50	NAG P300, 8' WIDE	D
14A	1.25	12	2.00	2.30	NAG S75, 8' WIDE	D
14B	1.50	15	1.50	7.70	NAG S75, 12' WIDE	D
21	1.33	14	1.50	6.67	NAG S75, 8' WIDE	D
92A	1.25	14	1.50	2.00	NAG S75, 8' WIDE	D
92B	1.25	12	1.50	5.00	NAG S75, 8' WIDE	D
99	1.25	14	1.50	2.75	NAG S75, 8' WIDE	D

NOTES:
1. ANCHOR TRENCHES SHALL BE INSTALLED AT BEGINNING AND END OF CHANNEL IN THE SAME MANNER AS LONGITUDINAL ANCHOR TRENCHES.
2. CHANNEL DIMENSIONS SHALL BE CONSTANTLY MAINTAINED. CHANNEL SHALL BE CLEANED WHENEVER TOTAL CHANNEL DEPTH IS REDUCED BY 25% AT ANY LOCATION.
3. SEDIMENT DEPOSITS SHALL BE REMOVED WITHIN 24 HOURS OF DISCOVERY OR AS SOON AS SOIL CONDITIONS PERMIT ACCESS TO CHANNEL WITHOUT FURTHER DAMAGE. DAMAGED LINING SHALL BE REPAIRED OR REPLACED WITHIN 48 HOURS OF DISCOVERY.
4. NO MORE THAN ONE THIRD OF THE SHOOT (GRASS LEAF) SHALL BE REMOVED IN ANY MOWING. GRASS HEIGHT SHALL BE MAINTAINED BETWEEN 2 AND 3 INCHES UNLESS OTHERWISE SPECIFIED. EXCESS VEGETATION SHALL BE REMOVED FROM PERMANENT CHANNELS TO ENSURE SUFFICIENT CHANNEL CAPACITY.

PARABOLIC VEGETATED CHANNEL (BMP)

NOT TO SCALE

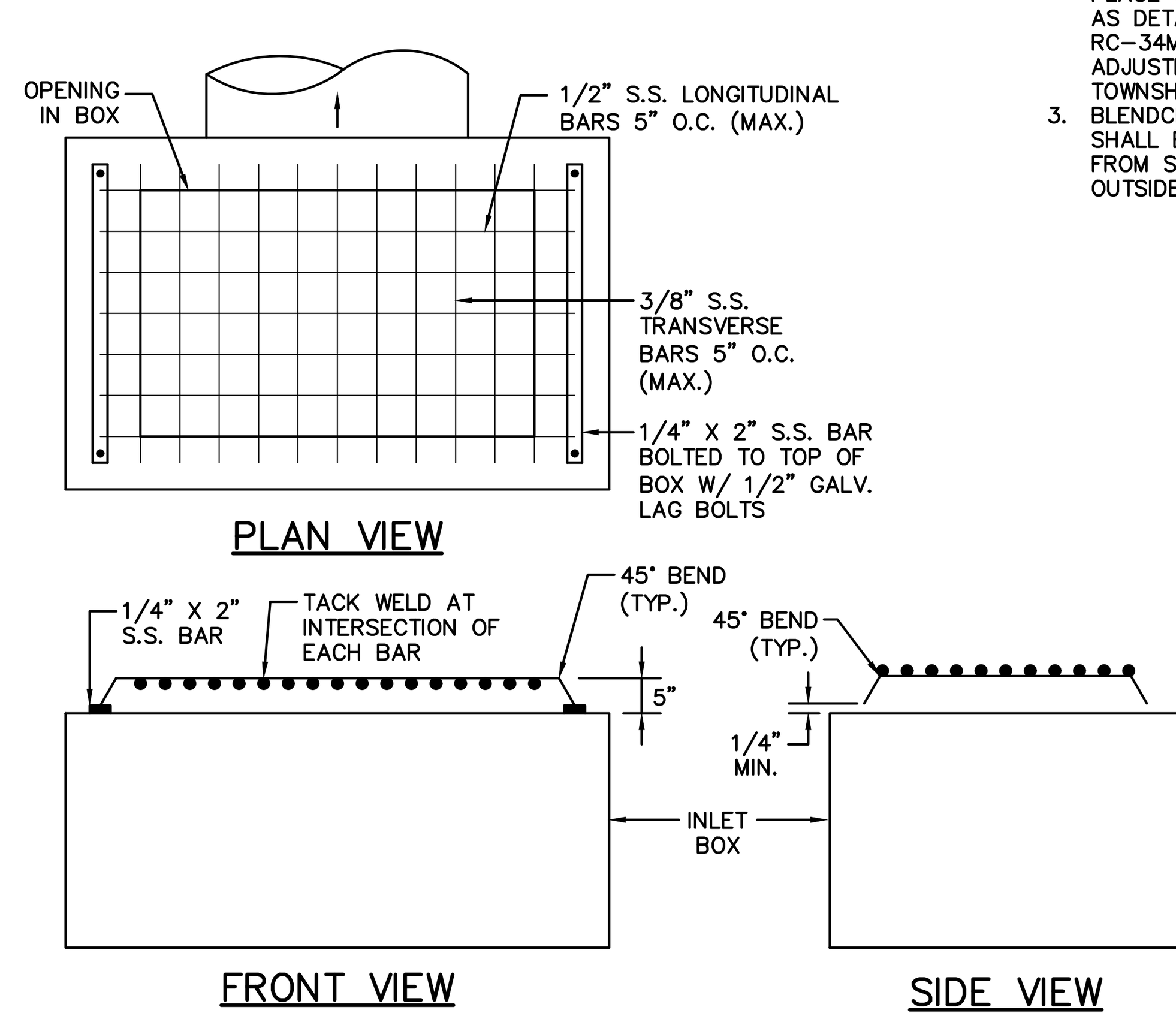

TRASH SCREEN (I-107)

NOT TO SCALE



NOTES:
1. SUGGESTED MANUFACTURER: "BERNTSEN" (www.berntsen.com/1-800-518-0934) OR APPROVED EQUAL.
2. MARKER SHALL BE ATTACHED TO THE FOLLOWING STRUCTURES (ATTACH WITH EPOXY IN ACCORDANCE WITH MANUFACTURER'S DIRECTIONS):
   - TYPE C INLETS (AFFIXED TO TOP OF CURB, FACING STREET)
   - TYPE M INLETS (AFFIXED TO TOP OF STRUCTURE ON ANY SIDE)
   - HEADWALLS (AFFIXED TO TOP OF STRUCTURE, CENTERED OVER OPENING)

INLET/HEADWALL MARKER

NOT TO SCALE

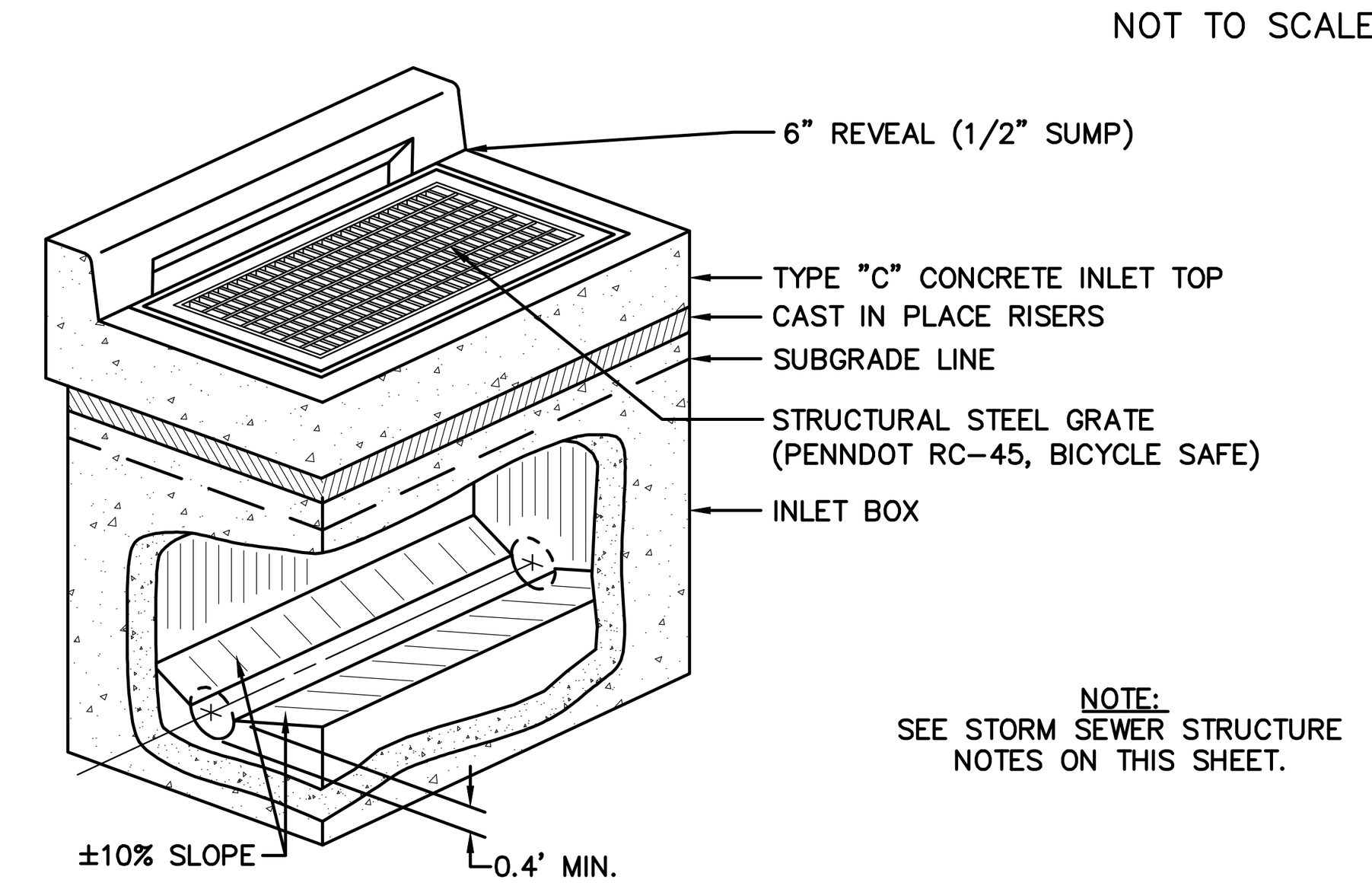

NOTE:
SEE STORM SEWER STRUCTURE NOTES ON THIS SHEET.

PENNDOT TYPE C INLET

NOT TO SCALE

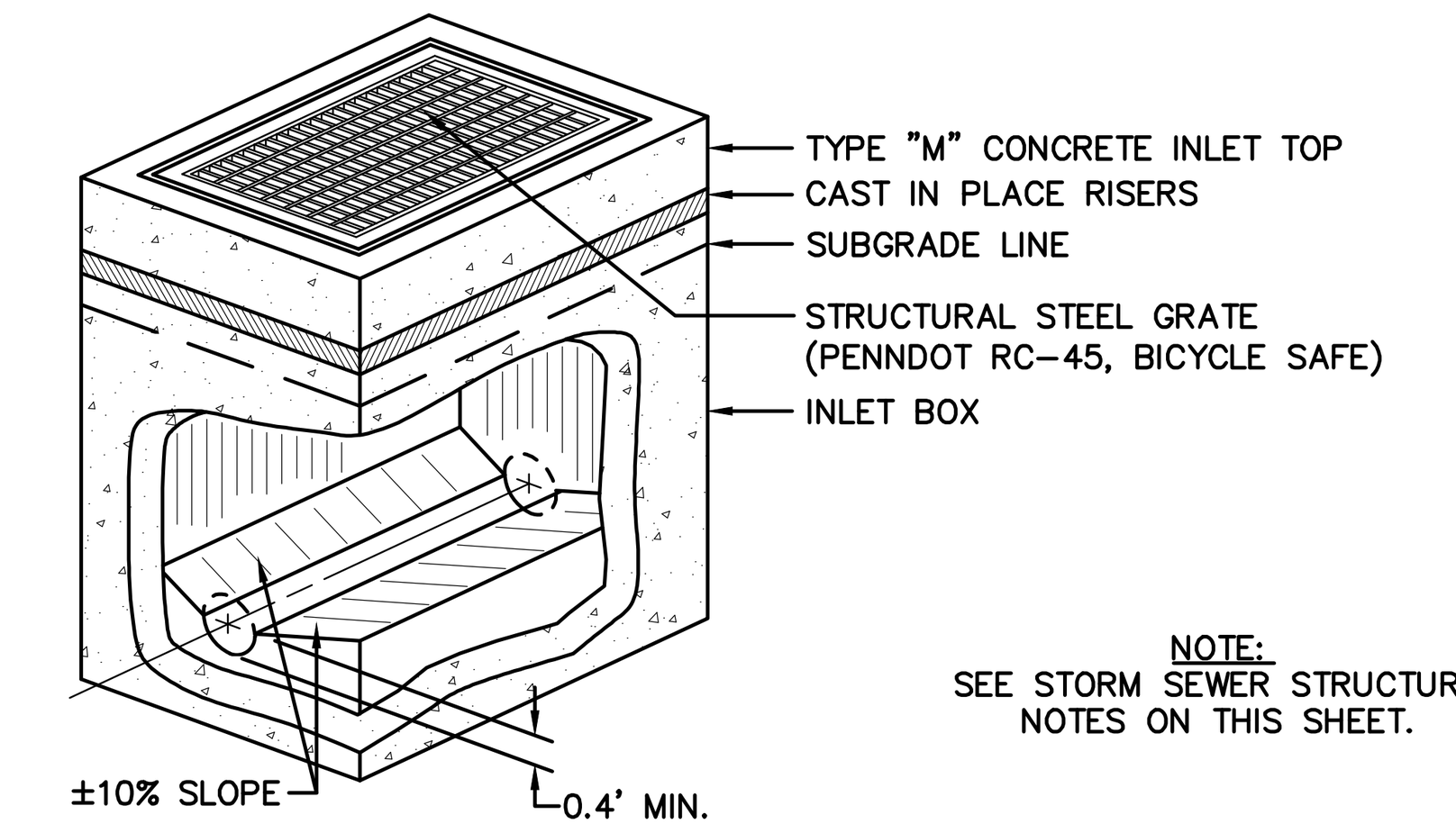

NOTE:
SEE STORM SEWER STRUCTURE NOTES ON THIS SHEET.

PENNDOT TYPE M INLET

NOT TO SCALE

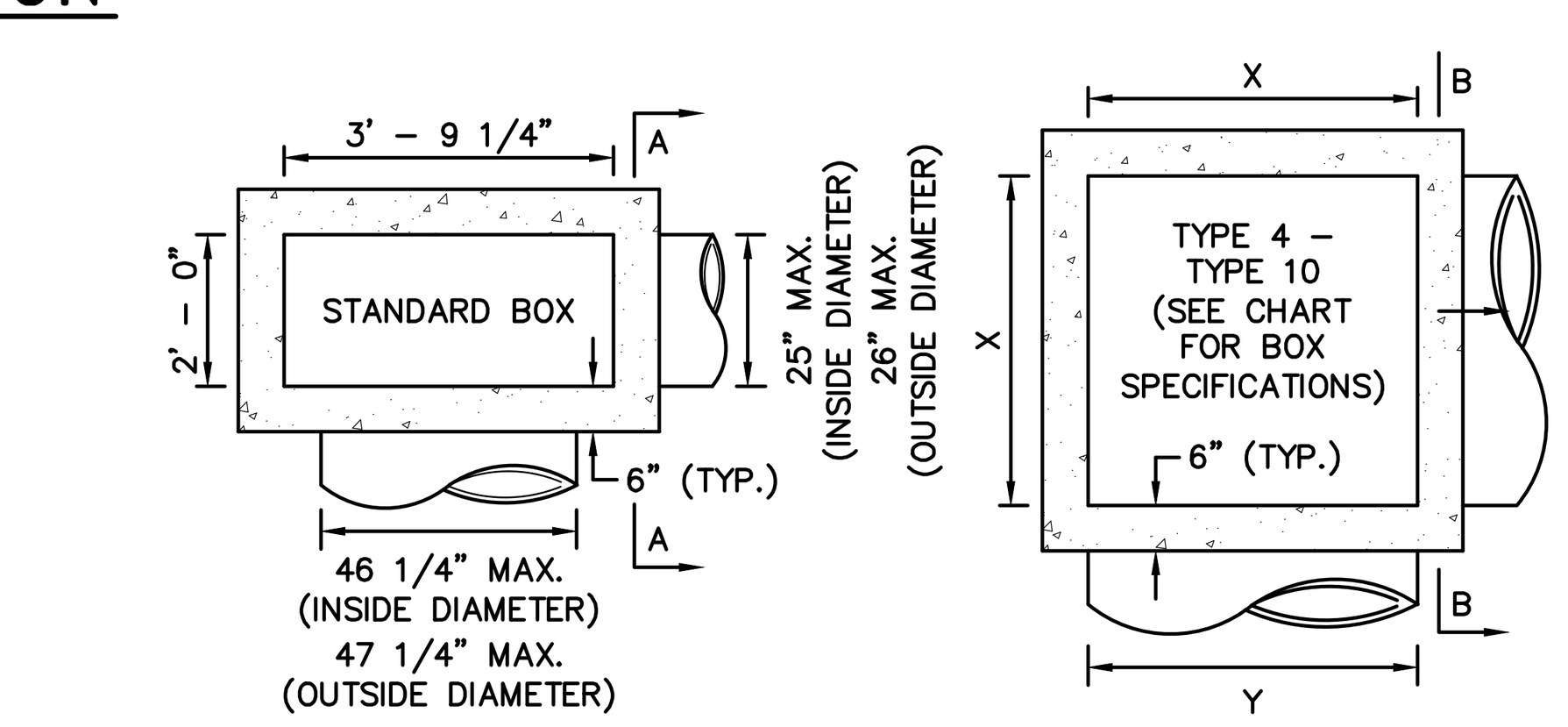

BOX TYPE	X	Y*
TYPE 4	4'	48"
TYPE 5	5'	60"
TYPE 6	6'	72"
TYPE 7	7'	84"
TYPE 8	8'	96"
TYPE 9	9'	108"
TYPE 10	10'	120"

*OUTSIDE PIPE DIAMETER

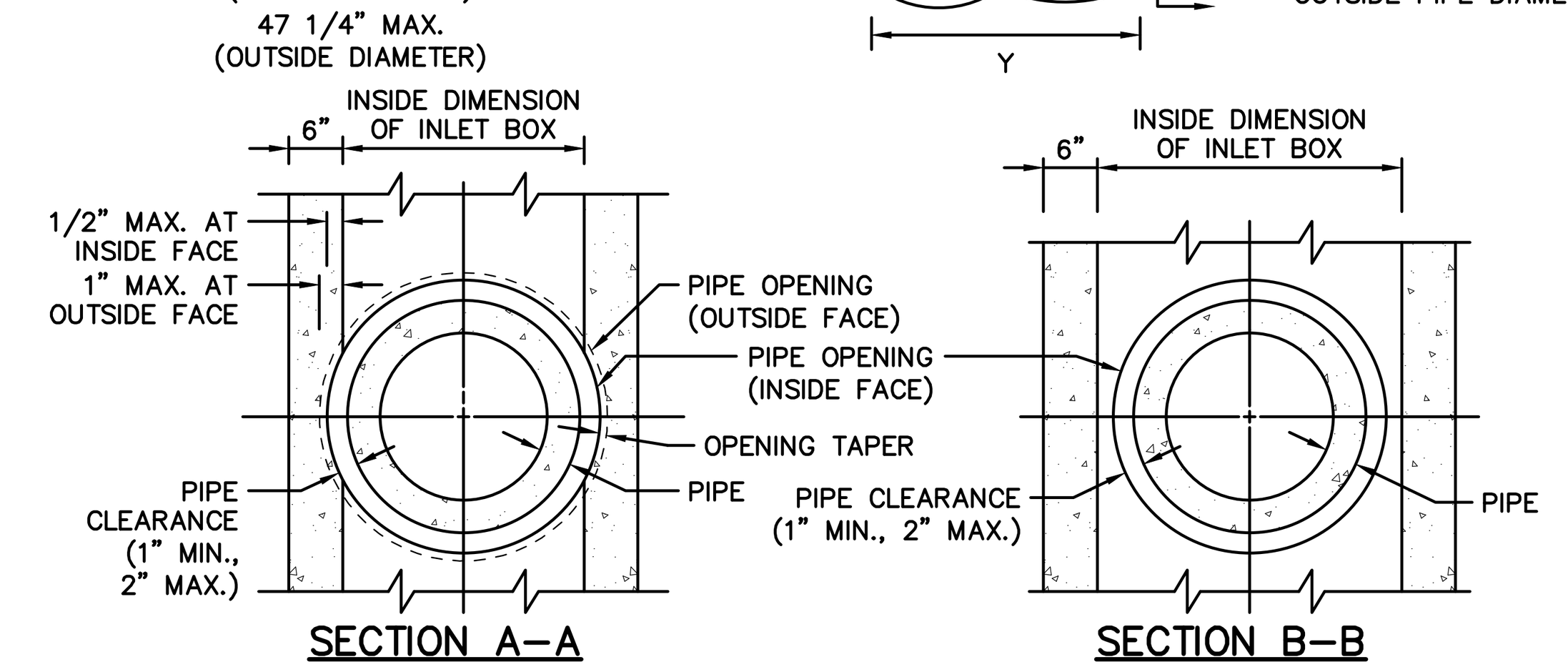

SECTION A-A (STANDARD INLET BOX ONLY)

SECTION B-B (TYP. ALL TYPES EXCEPT STANDARD)

NOTES:
1. INLETS LOCATED WITHIN PUBLIC RIGHT-OF-WAYS SHALL BE CONSTRUCTED IN CONFORMANCE WITH CURRENT PENNDOT RC-46 STANDARDS AND PUB. 408 SPECIFICATIONS (UNLESS WAIVED BY LEB. CO.).
2. CONSTRUCT OR PLACE INLET BOXES LEVEL, UNLESS OTHERWISE INDICATED OR DIRECTED.
3. CONSTRUCT OR PLACE INLET BOXES ON A SUBBASE CONSTRUCTED OF COMPACTED #2A COARSE AGGREGATE. PLACE AND COMPACT IN 4" LAYERS TO PROVIDE A 1' MINIMUM DEPTH.
4. LOCATE PIPE OR PIPES AS INDICATED OR DIRECTED.
5. CONNECT PIPES TO INLET BOXES WITH MORTAR OR WATERTIGHT RUBBER FLEXIBLE CONNECTORS.
6. FORM BOTTOM OF INLET, USING CLASS A CEMENT CONCRETE, TO CHANNEL THE FLOW TOWARD THE OUTLET PIPE. PROVIDE #4 REINFORCEMENT BARS SPACED AT 12" CENTER TO CENTER MAXIMUM WHEN THE THICKNESS EXCEEDS 3".
7. BACKFILL EXCAVATED SPACES AROUND THE STRUCTURE WITH ACCEPTABLE EMBANKMENT MATERIAL.

PRECAST INLET BOX DETAIL (RC-46)

NOT TO SCALE

NO.	DATE	REVISION
2	4-25-22	REVISED PER NLT, LEB. CO. ENGINEER & CITY OF LEB. AUTHORITY
1	2-1-22	REVISED PER NLT, LEB. CO. ENGINEER, LCPD, NLTMA, & CITY OF LEB. AUTHORITY

FOR PIONEER MANAGEMENT BY:
FIELDBOOK NO.: VALUE
SURV. CHIEF: RC
MANAGER: JAMES C. HENKE
CHKD BY: RC
DRAWN BY: RC
CHKD BY: JDB/JCH
DESIGN BY: JDB/KWG
DRAWING REFERENCE: F:\12\12-0950-02\CAD\Final-Ph4\Details.dwg
XREFS: TB [F:\12\12-0950-02\CAD\Final-Ph4\X-refs\TB.dwg]

CLIENT
LANDMARK HOMES AT SWEETBRIAR
c/o MR. CLIFF WEAVER
1737 WEST MAIN STREET
EPHRATA, PA 17522
(717) 733-1536

SCALE: AS NOTED

PIONEER Management, LLC
111 Millersville Road, Lancaster, PA 17603
Phone (717) 481-5500 · Fax (717) 481-4955
Email: jh@pioneermanagementllc.com
Website: www.pioneermanagementllc.com

STORMWATER DETAILS
FINAL PHASE 4 & REVISED FINAL PHASE 3 SUBDIVISION PLAN
FOR
THE CROSSINGS AT SWEET BRIAR
NORTH LEBANON TOWNSHIP LEBANON COUNTY, PA

DATE: JUNE 25, 2021
SHEET NO. 41 OF 43
DWG. NO. 12-0950-02-F

WETLAND BASIN #5

1. REMOVE TRASH AND DEBRIS FROM THE WETLAND AS NECESSARY.
2. DURING THE FIRST GROWING SEASON, VEGETATION IN THE WETLAND SHOULD BE INSPECTED EVERY 2 TO 3 WEEKS. DURING THE FIRST 2 YEARS, WETLANDS SHOULD BE INSPECTED AT LEAST 4 TIMES PER YEAR AND AFTER MAJOR STORMS (GREATER THAN 2 INCHES OF RAIN IN 24 HOURS). ONCE ESTABLISHED, PROPERLY DESIGNED AND INSTALLED WETLANDS SHOULD BE INSPECTED AT LEAST SEMIANNUALLY, AFTER MAJOR STORMS (GREATER THAN 2 INCHES OF RAIN IN 24 HOURS), AND AFTER PERIODS OF WARMING THAT GENERATE RAPID ICE BREAKUPS.
3. INSPECTIONS SHALL ASSESS THE VEGETATION, EROSION, FLOW CHANNELIZATION, BANK STABILITY, INLET/OUTLET CONDITIONS, AND SEDIMENT/DEBRIS ACCUMULATION IN THE WETLAND. STRUCTURAL ISSUES WITH THE WETLAND SUCH AS EROSION, BANK INSTABILITY, CROSS SECTION CHANGES, AND DAMAGE TO INLET OR OUTLET PIPES AND STRUCTURES SHALL BE ADDRESSED AS SOON AS POSSIBLE.
4. WETLAND AND BUFFER VEGETATION MAINTENANCE INCLUDING WATERING, WEEDING, MULCHING, REPLANTING, ETC. SHALL BE COMPLETED IN ORDER TO MAINTAIN AT LEAST AN 85 PERCENT COVER OF THE EMERGENT VEGETATION ZONE. UNDESIRABLE AND INVASIVE SPECIES SHOULD BE REMOVED, AND DESIRABLE REPLACEMENTS PLANTED IF NECESSARY. DAMAGED VEGETATION SHALL BE REPLACED WITHOUT DISTURBING REMAINING VEGETATION.
5. SEDIMENT SHOULD BE REMOVED FROM THE FOREBAY BEFORE IT OCCUPIES 50 PERCENT OF THE FOREBAY, TYPICALLY EVERY 5 TO 10 YEARS.
6. ACCESS SHALL BE GRANTED TO ALL AUTHORIZED LOCAL, STATE, AND FEDERAL AGENCIES FOR BMP INSPECTIONS AT REASONABLE TIMES AND WITH REASONABLE FREQUENCY.
7. WRITTEN REPORTS DOCUMENTING ALL INSPECTIONS, REPAIRS, AND MAINTENANCE ACTIVITIES SHALL BE MAINTAINED ON SITE BY THE PROPERTY OWNER AT ALL TIMES.

INFILTRATION BASIN #11

1. REGULARLY CLEAN OUT ROOF GUTTER SYSTEMS WHICH ARE CONNECTED TO INFILTRATION FACILITY.
2. CLEAN AND/OR REPLACE FILTER SCREENS THAT INTERCEPT ROOF RUNOFF AS NECESSARY.
3. CATCH BASINS, INLETS, AND CLEANOUTS UPGRADIENT OF THE INFILTRATION FACILITIES SHOULD BE INSPECTED AND CLEANED AS NECESSARY OR AT LEAST TWO TIMES PER YEAR AND AFTER RUNOFF EVENTS OF GREATER THAN ONE (1) INCH OF RAIN.
4. VEGETATION ALONG THE SURFACE OF THE INFILTRATION FACILITY SHALL BE MAINTAINED IN GOOD CONDITION. MOW TO ENSURE SAFETY, AESTHETICS, PROPER FACILITY OPERATION, AND TO SUPPRESS WEEDS AND INVASIVE VEGETATION. DISPOSE OF CUTTINGS IN A LOCAL COMPOSTING FACILITY. MOW ONLY WHEN THE AREA IS DRY TO AVOID RUTTING.
5. CARE SHALL BE TAKEN TO AVOID COMPACTION BY MOWERS. VEHICULAR ACCESS ON THE SURFACE ABOVE THE INFILTRATION AREA SHALL BE PROHIBITED.
6. RESEED BARE AREAS USING NATIVE GRASS SPECIES. INSTALL APPROPRIATE EROSION CONTROL MEASURES WHEN NATIVE SOIL IS EXPOSED, OR EROSION CHANNELS ARE FORMING.
7. IT MAY BE NECESSARY TO WATER THE VEGETATION ABOVE THE INFILTRATION FACILITY DURING DRY PERIODS TO MAINTAIN VEGETATIVE HEALTH.
8. INSPECTIONS OF THE INFILTRATION FACILITIES SHALL BE CONDUCTED WITHIN 48 HOURS AFTER EVERY STORM EVENT OF GREATER THAN ONE (1) INCH OF RAIN, OR FOUR TIMES PER YEAR AT A MINIMUM.
   A. INSPECT AND CORRECT EROSION PROBLEMS, SUBSIDENCE, SINKHOLES, DAMAGE TO VEGETATION, AND THE GROWTH OF UNWANTED OR INVASIVE VEGETATION.
   B. VERIFY THAT ALL WATER IN THE FACILITY HAS DRAINED DOWN WITHIN 72 HOURS AFTER THE RAINFALL EVENT. IF DRAW-DOWN TIMES ARE EXCEEDING 72 HOURS, DRAIN THE FACILITY VIA PUMPING AND CLEAN OUT ANY PERFORATED PIPING OR OTHER STORAGE STRUCTURES. IF SLOW DRAINAGE PERSISTS, THE FACILITY MAY REQUIRE REPLACEMENT.
   C. ALL STRUCTURES EXPECTED TO RECEIVE AND/OR TRAP DEBRIS AND SEDIMENT, INCLUDING CATCH BASINS, INLETS, CLEANOUTS, PIPES AND OTHER STORAGE STRUCTURES SHOULD BE INSPECTED FOR CLOGGING AND EXCESSIVE DEBRIS AND SEDIMENT ACCUMULATION. SEDIMENT ACCUMULATION SHALL BE ADDRESSED WHEN SEDIMENT IS GREATER THAN 3 INCHES DEEP. DISPOSE OF SEDIMENT AND DEBRIS IN COMPLIANCE WITH LOCAL, STATE AND FEDERAL REGULATIONS.
   D. INSPECT ALL PIPES, CATCH BASINS, INLETS, CLEANOUTS AND OUTLET STRUCTURES FOR DEFICIENCIES AND REPAIR OR REPLACE IF REQUIRED. COMMON DEFICIENCIES INCLUDE BROKEN CONCRETE, CRUSHED OR RUSTED PIPES, MISSING GROUT, OR BLOCKAGES CAUSED BY LITTER OR FOREIGN MATERIALS.
   E. NOTIFY MUNICIPAL OFFICIALS IF THERE IS EVIDENCE OF WATER CONTAMINATION OR HAZARDOUS MATERIAL SPILLS.
9. ACCESS SHALL BE GRANTED TO ALL AUTHORIZED LOCAL, STATE, AND FEDERAL AGENCIES FOR BMP INSPECTIONS AT REASONABLE TIMES AND WITH REASONABLE FREQUENCY.
10. WRITTEN REPORTS DOCUMENTING ALL INSPECTIONS, REPAIRS, AND MAINTENANCE ACTIVITIES SHALL BE MAINTAINED ON SITE BY THE PROPERTY OWNER AT ALL TIMES.
11. INSPECT AND MAINTAIN RETAINING WALL IN DESIGN CONDITION. KEEP DRAINAGE PIPES AND ANY WEEP HOLES OPEN. FILL IN AND STABILIZE ANY ERODED AREAS. ANY SIGNS OF WALL MOVEMENT OR SLOPE SLIPPAGE SUCH AS WALL CRACKING, BULGING, LEANING, OR SETTLING, SHALL BE INSPECTED BY A LICENSED PROFESSIONAL AND REPORTED TO NORTHERN LEBANON TOWNSHIP. CORRECTIONS SHALL BE MADE AS NECESSARY. REMOVE ANY TREE GROWTH WITHIN 20' OF WALL.

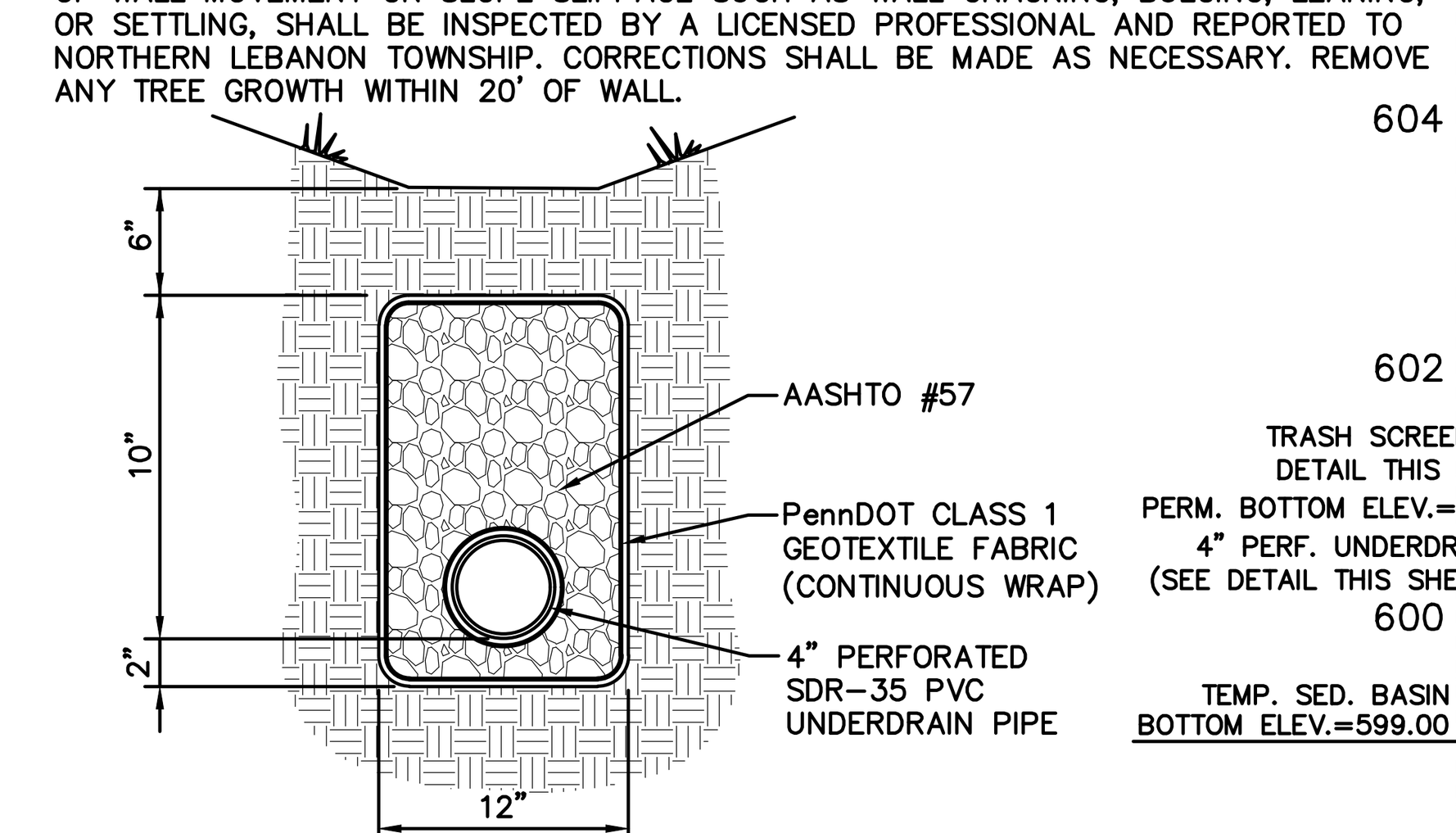

UNDERDRAIN

NOT TO SCALE

NOTES:
1. TRASH SCREENS SHALL BE REMOVABLE.
2. TRASH SCREENS SHALL BE CENTERED OVER ORIFICE.

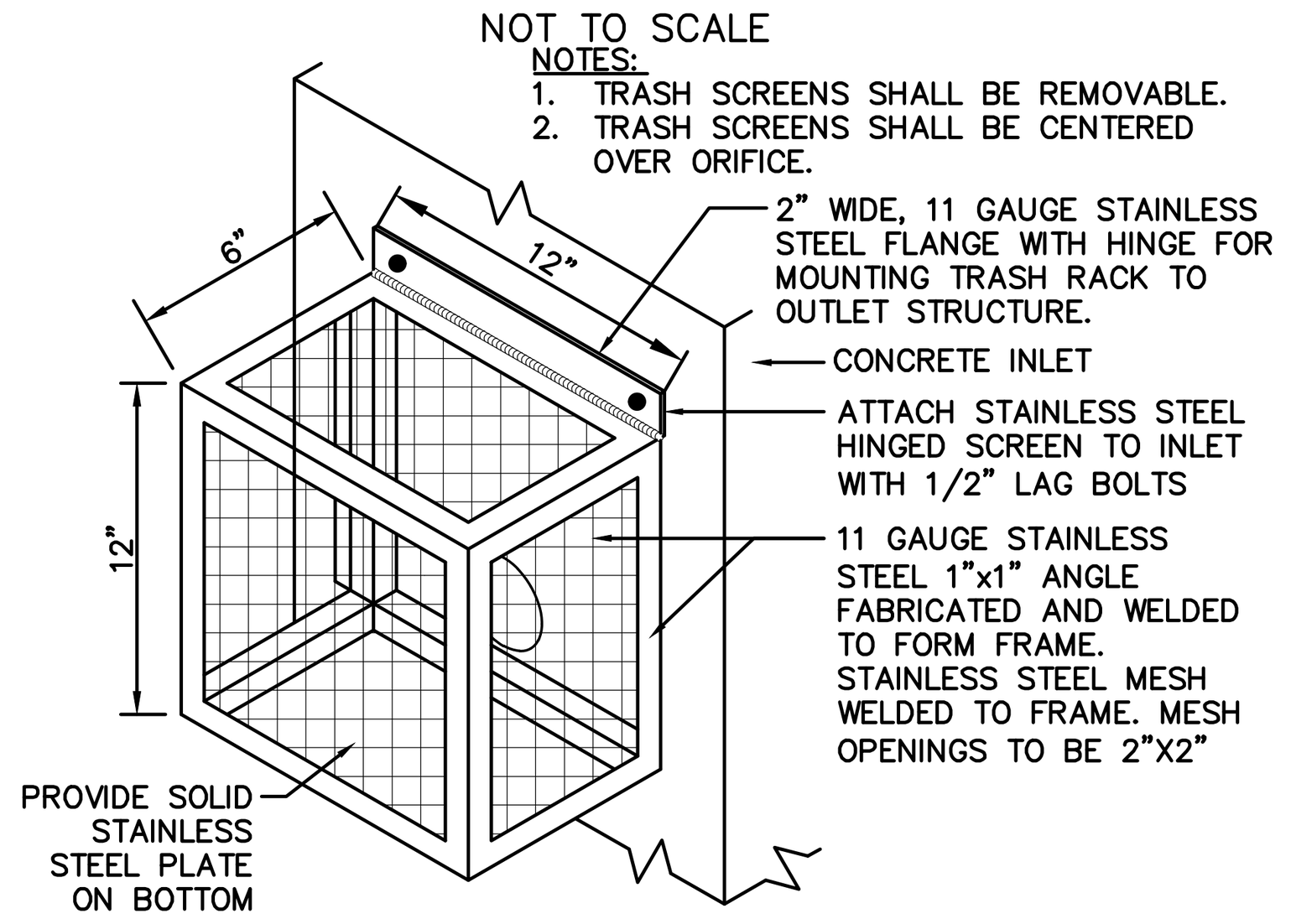

TRASH SCREEN

NOT TO SCALE

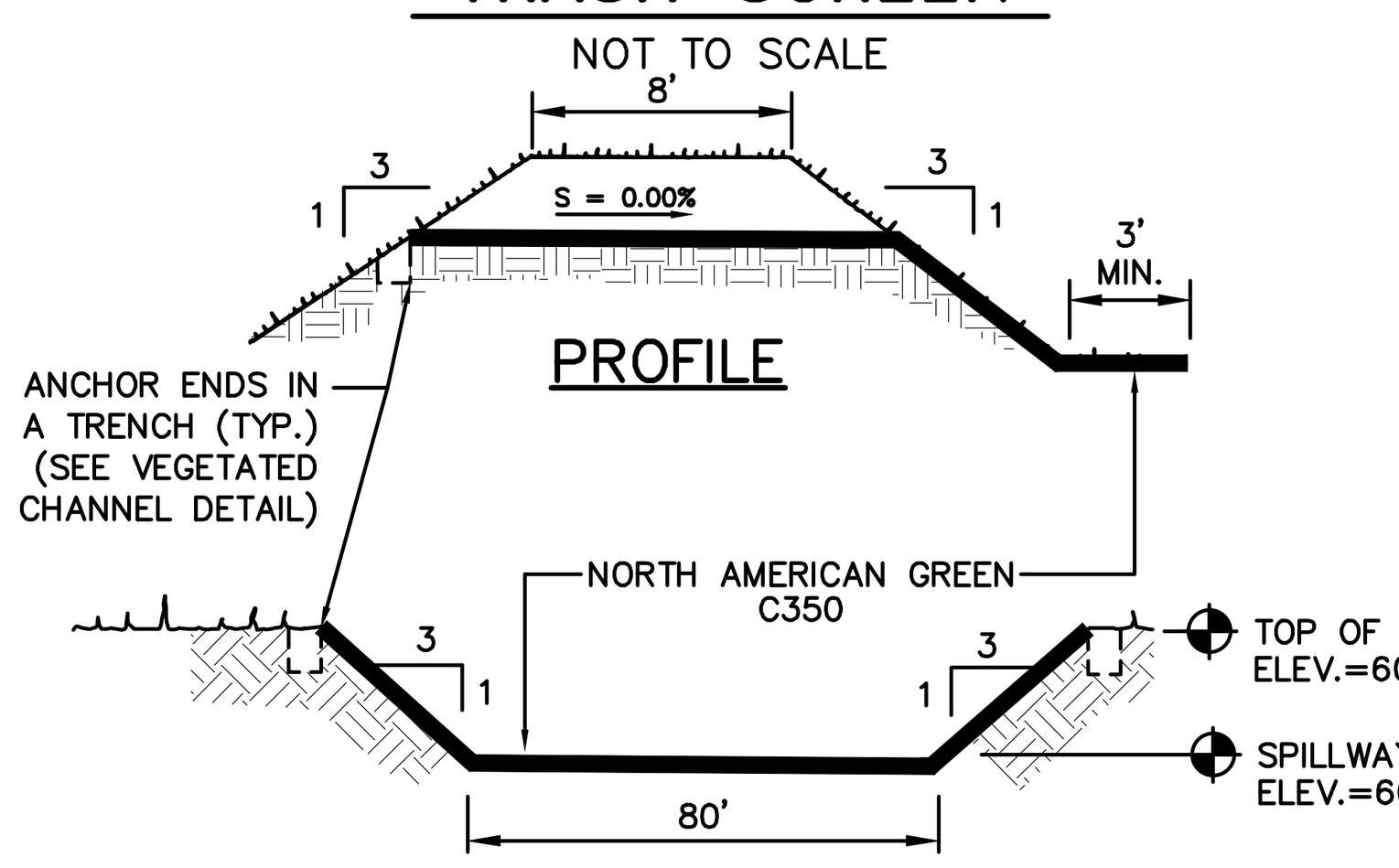

BASIN 11 EMERGENCY SPILLWAY

NOT TO SCALE

VEGETATED OPEN CHANNEL

1. MOW AND TRIM VEGETATION A MINIMUM OF TWICE PER YEAR TO ENSURE SAFETY, AESTHETICS, PROPER SWALE OPERATION, AND TO SUPPRESS WEEDS AND INVASIVE VEGETATION. DISPOSE OF CUTTINGS IN A LOCAL COMPOSTING FACILITY. MOW ONLY WHEN SWALE IS DRY TO AVOID RUTTING.
2. RESEED BARE AREAS USING NATIVE, SALT-TOLERANT GRASS SPECIES. INSTALL APPROPRIATE EROSION CONTROL MEASURES WHEN NATIVE SOIL IS EXPOSED, OR EROSION CHANNELS ARE FORMING. VEGETATIVE COVER SHOULD BE MAINTAINED AT A MINIMUM OF 95%.
3. PLANT ALTERNATIVE GRASS SPECIES IN THE EVENT OF UNSUCCESSFUL VEGETATION ESTABLISHMENT.
4. REPLACE DAMAGED VEGETATION WITHOUT DISTURBING REMAINING VEGETATION.
5. IT MAY BE NECESSARY TO WATER THE SWALE DURING DRY PERIODS TO MAINTAIN VEGETATIVE HEALTH.
6. ROTOTILL AND REPLANT SWALE IF DRAW DOWN TIME IS MORE THAN 48 HOURS. THIS SOIL RESTORATION PROCESS MAY NEED TO BE REPEATED OVER TIME DUE TO NATURAL SOIL COMPACTION AND SETTLING.
7. ANY CHECK DAMS SHALL BE REPAIRED OR REPLACED WHEN SIGNS OF ALTERED WATER FLOW (CHANNELIZATION, OBSTRUCTIONS, EROSION, ETC.) ARE IDENTIFIED
8. INSPECTIONS OF THE SWALE SHALL BE CONDUCTED WITHIN 48 HOURS AFTER EVERY STORM EVENT OF GREATER THAN ONE (1) INCH OF RAIN, OR ANNUALLY AT A MINIMUM.
   A. INSPECT AND CORRECT EROSION PROBLEMS, DAMAGE TO VEGETATION, AND SEDIMENT AND DEBRIS ACCUMULATION (ADDRESS WHEN > 3 INCHES AT ANY SPOT OR COVERING VEGETATION).
   B. INSPECT VEGETATION ON SIDE SLOPES FOR EROSION AND FORMATION OF RILLS OR GULLIES, CORRECT AS NEEDED.
   C. INSPECT FOR POOLS OF STANDING WATER; DEWATER AND DISCHARGE TO AN APPROVED LOCATION AND RESTORE TO DESIGN GRADE.
   D. INSPECT FOR LITTER; REMOVE PRIOR TO MOWING.
   E. INSPECT FOR UNIFORMITY IN CROSS-SECTION AND LONGITUDINAL SLOPE, CORRECT AS NEEDED.
   F. INSPECT SWALE INLET (CURB CUTS, PIPES, ETC.) AND OUTLET FOR SIGNS OF EROSION OR BLOCKAGE, CORRECT AS NEEDED.
   G. INSPECT ANY PIPES, CATCH BASINS, OR OUTLET STRUCTURES FOR DEFICIENCIES AND REPAIR OR REPLACE IF REQUIRED. COMMON DEFICIENCIES INCLUDE BROKEN CONCRETE, CRUSHED OR RUSTED PIPES, OR MISSING GROUT.
9. ACCESS SHALL BE GRANTED TO ALL AUTHORIZED LOCAL, STATE, AND FEDERAL AGENCIES FOR BMP INSPECTIONS AT REASONABLE TIMES AND WITH REASONABLE FREQUENCY.
10. WRITTEN REPORTS DOCUMENTING ALL INSPECTIONS, REPAIRS, AND MAINTENANCE ACTIVITIES SHALL BE MAINTAINED ON SITE BY THE PROPERTY OWNER AT ALL TIMES.

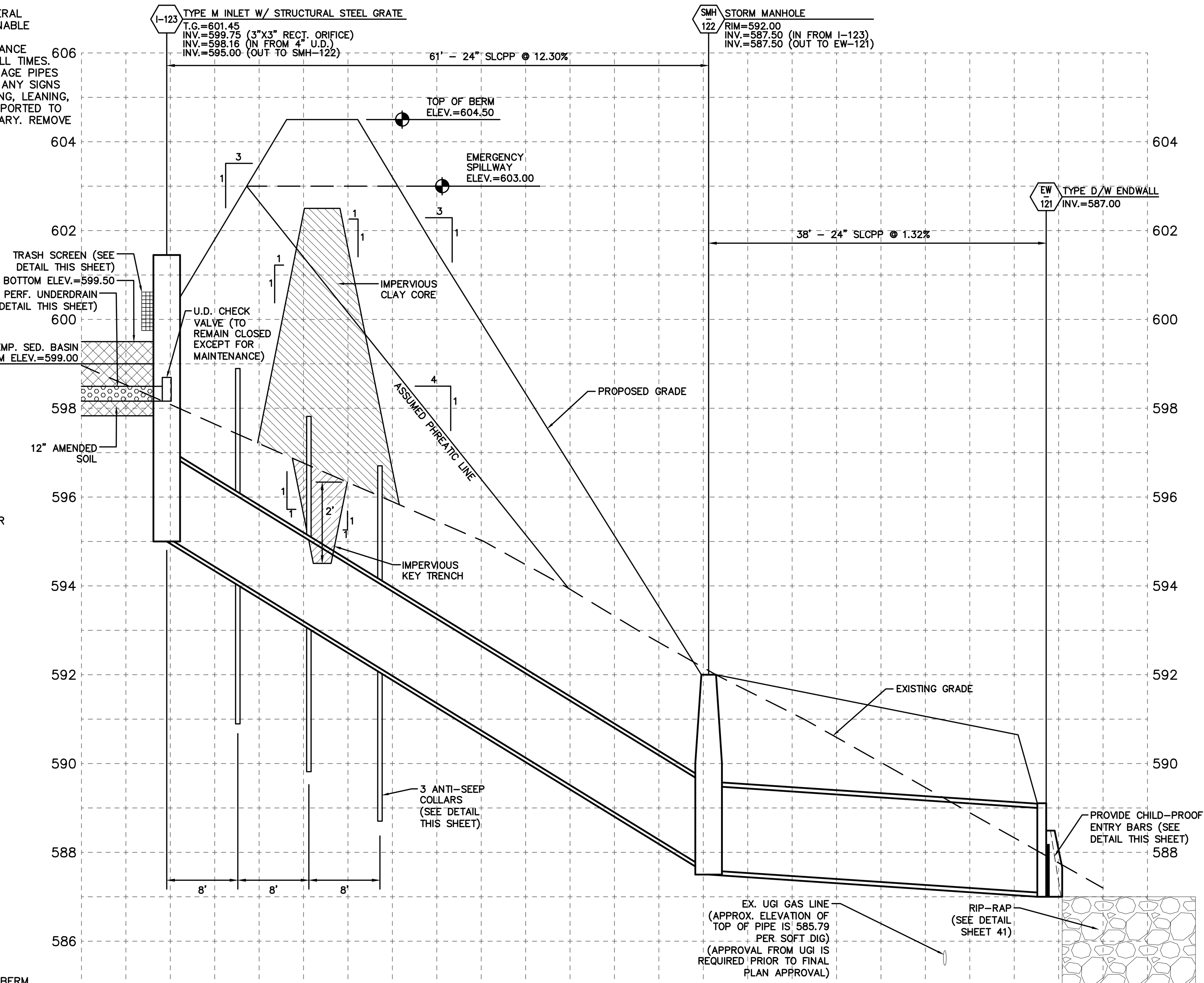

NOTES:
1. BASIN EMBANKMENT & BACKFILL AROUND ANTI-SEEP COLLARS SHALL BE COMPACTED TO 95% PROCTOR DENSITY.
2. CLAY CORE AND KEY TRENCH SHALL EXTEND ENTIRE LENGTH OF BASIN BERM.
3. ENSURE PROPER COMPACTION OF CLAY LINING AROUND OUTLET STRUCTURE AND ENDWALLS IN BASIN.
4. SEE LIMITED GEOTECHNICAL ENGINEERING REPORT BY RETTEW ASSOCIATES, INC. FOR EMBANKMENT CONSTRUCTION SPECIFICATIONS.

INFILTRATION BASIN #11 EMBANKMENT SECTION (BMP)

SCALE: HORIZ. – 1"=10'
VERT. – 1"=2'

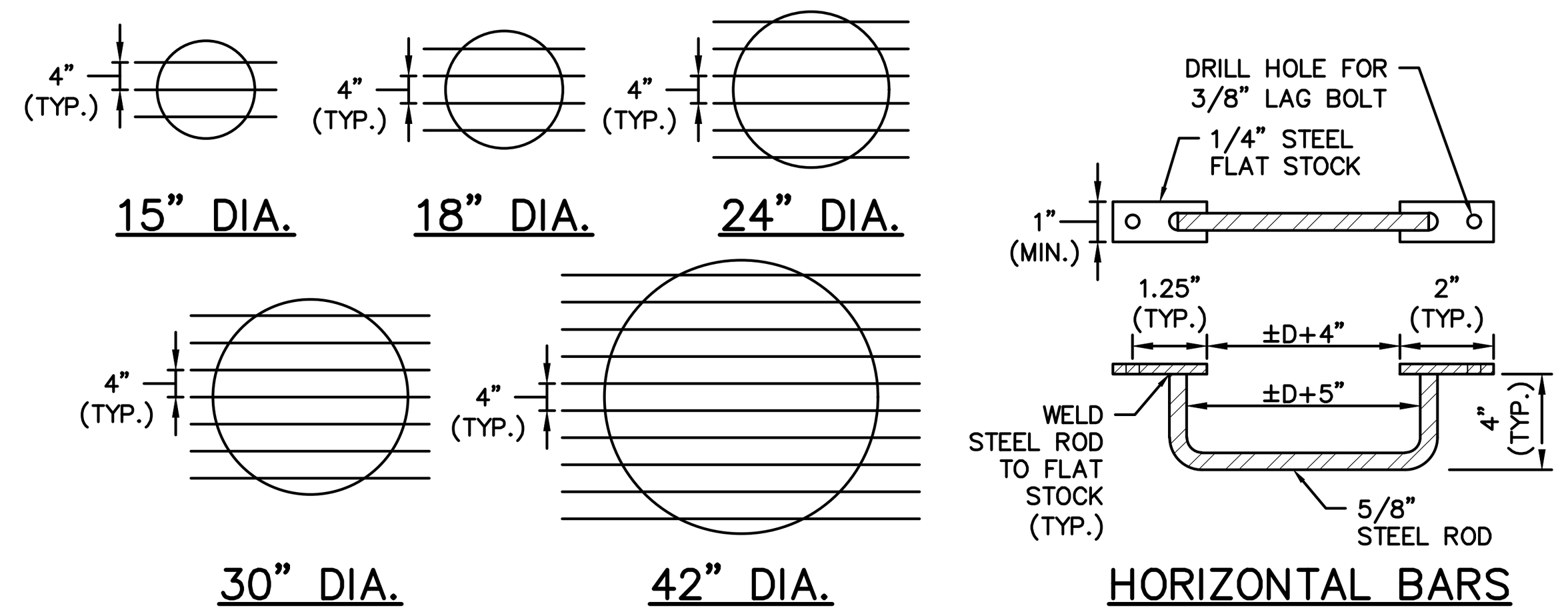

NOTE:
APPLY 2 COATS OF RUST-INHIBITIVE PAINT TO ALL TRASH RACK SURFACES

ENDWALL CHILDPROOF ENTRY BARS

NOT TO SCALE

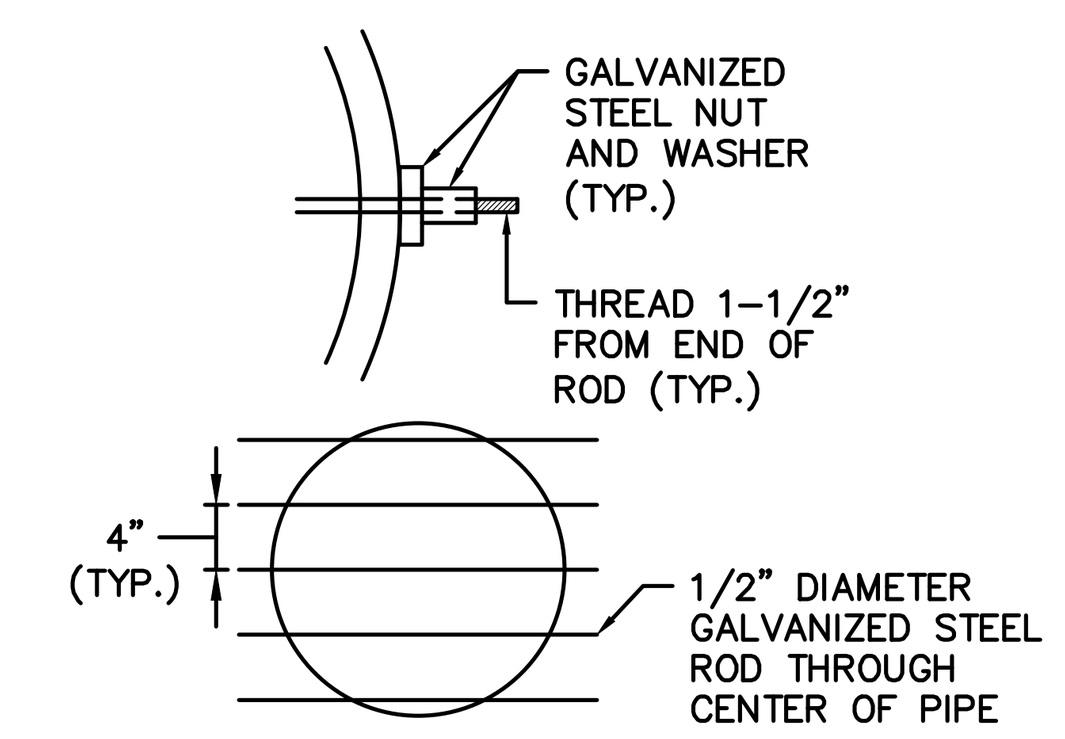

PIPE WITH CHILDPROOF ENTRY BARS (FOR FLARED END SECTIONS)

NOT TO SCALE

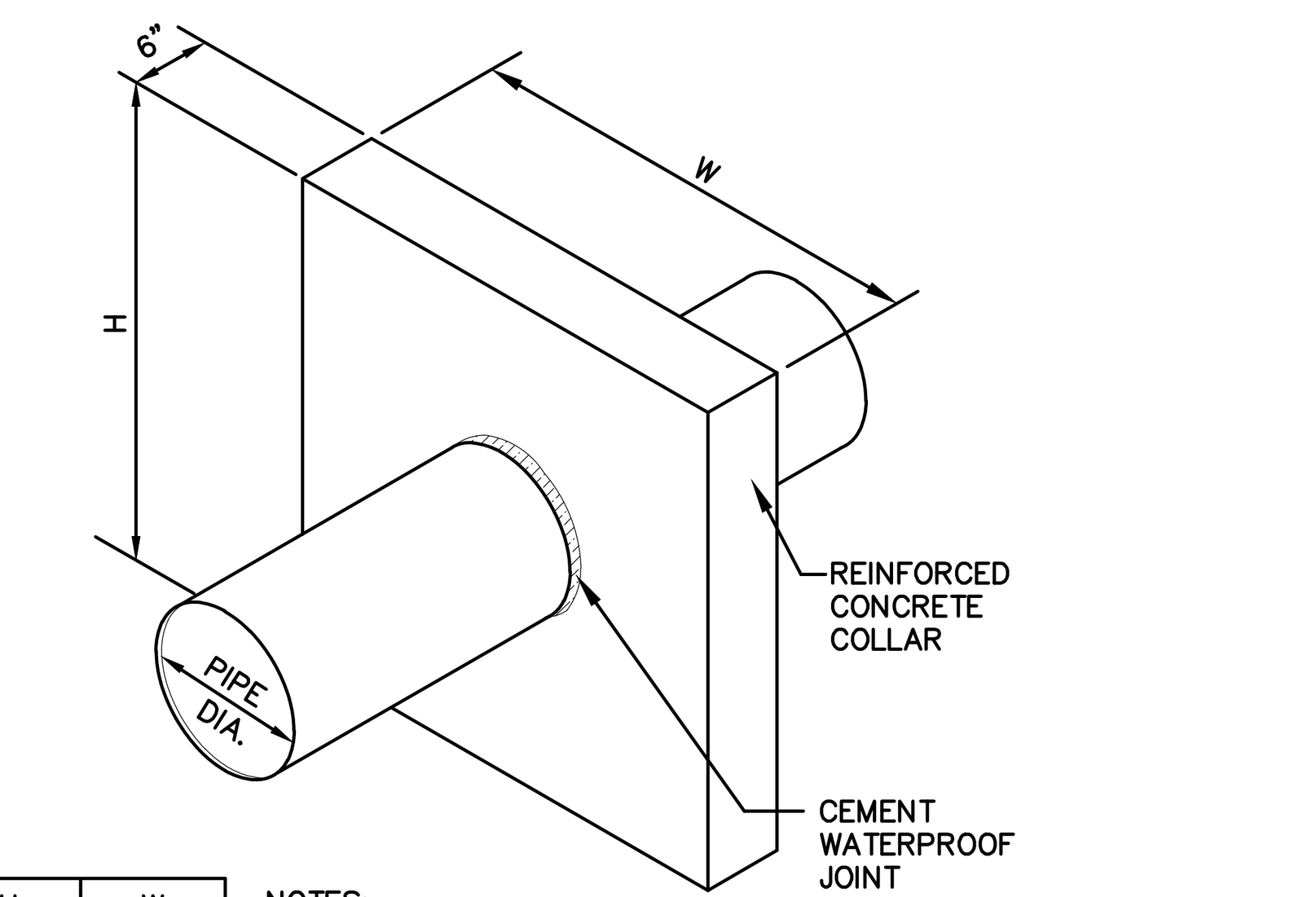

BASIN	H (FT.)	W (FT.)
11	8'	8'

NOTES:
1. MIN. CONCRETE COMPRESSIVE STRENGTH = 3,750 P.S.I.
2. REINFORCEMENT SHALL BE 6x6 W4.0xW4.0 OR #3 REBAR SPACED 12" EACH WAY, CENTERED WITHIN COLLAR
3. SEE BASIN EMBANKMENT SECTION DETAIL FOR LOCATION.
4. COMPACT BACKFILL AROUND COLLAR TO 95% PROCTOR DENSITY.

REINFORCED CONCRETE ANTI-SEEP COLLAR

NOT TO SCALE

LEBANON COUNTY / N. LEB. TWP. – STORMWATER MANAGEMENT BEST MANAGEMENT PRACTICES (BMP) OPERATION AND MAINTENANCE (O&M) AGREEMENT

27-2345156-379802

Lebanon County/North Lebanon Township - Stormwater Management Best Management Practices (BMP) Operation and Maintenance (O&M) Agreement

THIS AGREEMENT, made and entered into this _____ day of _________, 20___, by and between Landmark Homes at Sweetbriar c/o Mr. Cliff Weaver, (hereinafter "Landowner"), and the subject approval agency, Lebanon County; Pennsylvania, (hereinafter "County"), and the Township of North Lebanon, Lebanon County (hereinafter "Municipality")

WITNESSETH

WHEREAS, the Landowner is the owner of certain real property located at 941 Mount Zion Road, North Lebanon Township, as recorded by deed in the land records of Lebanon County, Pennsylvania, Deed Book 2185 at Page 945-957, (hereinafter "Property").

WHEREAS, the Landowner is proceeding to build and develop the Property; and

WHEREAS, the Subdivision/Land Development/Stormwater Management (SWM) Site Plan (hereinafter "Plan") for The Crossings at Sweet Briar, Final Phase 4 and Revised Final Phase 3 Subdivision Plan, Plan Book _____ Page _______ which is expressly made a part hereof, as approved or to be approved by Lebanon County and Municipality, provides for management of stormwater within the confines of the Property; and

WHEREAS, the SWM Best Management Practices (BMP) Operation and Maintenance Plan (hereinafter referred to as the "O&M Plan") approved by the County and Municipality for the property identified herein, provides for management of stormwater within the confines of the Property through the use of BMPs; and

WHEREAS, the County, Municipality, and the Landowner, their successors and assigns agree that the health, safety, and welfare of the residents of the County and Municipality and the protection and maintenance of water quality require that on-site SWM (BMPs) be constructed and maintained on the Property: and

WHEREAS, the County and Municipality requires, that stormwater management facilities as shown on the Plan be constructed and adequately maintained by the Landowner, their successors, and assigns; and

WHEREAS, the County and Municipality requires, through the implementation of the SWM Site Plan, that SWM BMPs as required by said SWM Site Plan and the Lebanon County Stormwater Management Ordinance be constructed and adequately operated and maintained by the Landowner, successors, and assigns.

NOW, THEREFORE, in consideration of the foregoing premises, the mutual covenants contained herein, and the following terms and conditions, the parties hereto agree as follows:

1. The stormwater management BMPs shall be constructed by the Landowner, their successors, and assigns, in accordance with the terms, conditions and specifications identified in the subdivision/land development/SWM Site Plan.

2. The Landowner, their successors, and assigns, shall operate and maintain the stormwater management BMPs as shown on the subdivision/land development/SWM Site Plan in good working condition in accordance with the specific operation and maintenance requirements noted in the approved O&M Plan.

3. The Landowner, their successors and assigns, hereby grants permission to the Municipality, Lebanon County Planning Department, and the Lebanon County Engineer, their authorized agents, and employees, upon presentation of proper identification, to enter upon the Property at reasonable times, and to inspect the SWM BMPs whenever deemed necessary. Whenever possible, the Municipality, Lebanon County Planning Department, or the Lebanon County Engineer shall notify the Landowner prior to entering the Property. The purpose of the inspection is to assure safe and proper functioning of the SWM BMPs. The inspection shall cover the entire facilities, pipes, berms, outlet structures, pond areas, access roads, etc. When inspections are conducted, the Municipality, Lebanon County Planning Department, and/or the Lebanon County Engineer shall give the Landowner, their successors and assigns, copies of the inspection report with findings and evaluations. At a minimum, this agreement grants the Municipality, Lebanon County Planning Department, and/or the Lebanon County Engineer the right to perform inspections in accordance with the following schedule:

- Annually for the first 5 years after the construction of the stormwater facilities,
- Once every 3 years thereafter, or
- During or immediately upon the cessation of a 10 year or greater precipitation event.

4. All reasonable costs for said inspections shall be borne by the Landowner and payable to the inspecting agency.

5. The owner shall convey to the County and Municipality easements and/or rights-of-way to assure access for periodic inspections and maintenance by the Municipality and County, if required.

6. In the event the Landowner, their successors and assigns, fails to maintain the SWM BMPs in good working condition acceptable to the Municipality, the County, or its representatives, may enter upon the Property and take such necessary and prudent action to maintain said SWM BMPs and to charge the costs of the maintenance and/or repairs to the Landowner, their successors, and assigns. This provision shall not be construed as to allow the Municipality or County to erect any structure of a permanent nature on the land of the Landowner, outside of any easement belonging to the Municipality or County. It is expressly understood and agreed that the Municipality or County is under no obligation to maintain or repair said facilities, and in no event shall this Agreement be construed to impose any such obligation on the Municipality or County.

7. The Landowner, their successors and assigns, will perform maintenance in accordance with the maintenance schedule for the SWM BMPs including sediment removal as outlined on the approved schedule and/or Subdivision/Land Development/SWM Site Plan.

8. In the event the Municipality or County, pursuant to this Agreement, performs work of any nature, or expends any funds in performance of said work for labor, use of equipment, supplies, materials, engineering fees, attorney fees, and the like on account of the Landowner's or their successors' and assigns' failure to perform such work, the Landowner, their successors and assigns, shall reimburse the Municipality or County upon demand, within 10 days of receipt of invoice thereof, for all costs incurred by the Municipality or County hereunder. If not paid within said 10-day period, the Municipality or County may enter a lien against the property in the amount of such costs, or may proceed to recover their costs through proceedings in equity or at law as authorized under the applicable provisions of the Pennsylvania Municipal Code.

9. The Landowner, their successors and assigns, shall indemnify the Municipality and County and their agents and employees against any and all damages, accidents, casualties, occurrences or claims, which might arise or be asserted against the Municipality or County for the construction, presence, existence or maintenance of the stormwater management facilities by the Landowner, their successors and assigns.

10. In the event a claim is asserted against the Municipality or County, its agents or employees, the Municipality or County shall promptly notify the Landowner, their successors and assigns, and they shall defend, at their own expense, any suit based on such claim. If any judgment or claim is entered against the Municipality, County, or its agents or employees, the Landowner, their successors and assigns shall pay all costs and expenses in connection therewith.

11. In the advent of an emergency or the occurrence of special or unusual circumstances or situations, the Municipality or County may enter the Property, if the Landowner is not immediately available, without notification or identification, to inspect and perform necessary maintenance and repairs, if needed, when the health, safety or welfare of the citizens is at jeopardy. However, the Municipality or County shall notify the landowner of any inspection, maintenance, or repair undertaken within 5 days of the activity. The Landowner shall reimburse the agency undertaking the inspections, maintenance or repairs for any associated fees and costs.

12. The intent and purpose of this Agreement is to ensure the proper maintenance of the onsite BMPs by the Landowner; provided, however, that this Agreement shall not be deemed to create or affect any additional liability of any party for damage alleged to result from or be caused by stormwater runoff.

13. The Landowner, their executors, administrators, assigns, and other successors in interests and title, shall release the Municipality, Lebanon County Planning Department, and Lebanon County Engineer from all damages, accidents, casualties, occurrences, or claims which might arise or be asserted against said employees and representatives from the construction, presence, existence, or maintenance of the BMP(s) by the Landowner, Municipality or County.

NO.	DATE	REVISION
2	4-25-22	REVISED PER NLT, LEB. CO. ENGINEER & CITY OF LEB. AUTHORITY
1	2-1-22	REVISED PER NLT, LEB. CO. ENGINEER, LCPD, NLTMA, & CITY OF LEB. AUTHORITY

FOR PIONEER MANAGEMENT BY:

MANAGER: JAMES C. HENKE | SURV. CHIEF: RC | FIELDBOOK NO. VALUE
DESIGN BY: JDB/KWG | CHKD BY: JDB/JCH | DRAWN BY: RC | CHKD BY: RC
DRAWING REFERENCE: F:\12\12-0950-02\CAD\Final-Ph4\Details.dwg
XREFS: TB [F:\12\12-0950-02\CAD\Final-Ph4\X-refs\TB.dwg]

CLIENT
LANDMARK HOMES AT SWEETBRIAR
c/o MR. CLIFF WEAVER
1737 WEST MAIN STREET
EPHRATA, PA 17522
(717) 733-1536

SCALE
AS NOTED

PIONEER
Management, LLC
111 Millersville Road, Lancaster, PA 17603
Phone (717) 481-5500 · Fax (717) 481-4955
Email: jh@pioneermanagementllc.com
Website: www.pioneermanagementllc.com

STORMWATER DETAILS
FINAL PHASE 4 & REVISED FINAL PHASE 3 SUBDIVISION PLAN
FOR
THE CROSSINGS AT SWEET BRIAR
NORTH LEBANON TOWNSHIP LEBANON COUNTY, PA

DATE: JUNE 25, 2021

SHEET NO. 42 OF 43

DWG. NO. 12-0950-02-F

F:\12\12-0950-02\CAD\Final-Ph4\Details.dwg, 42 STORMWATER DETAILS, 6/7/2022 2:27:51 PM, 1:1

F:\12\12-0950-02\CAD\Final PH\Details.dwg, 43 STORMWATER DETAILS, 6/7/2021 2:27:51 PM, 1:1

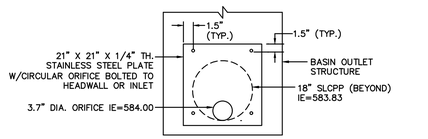

EX. BASIN 5 ORIFICE PLATE (HW-118)

NOT TO SCALE

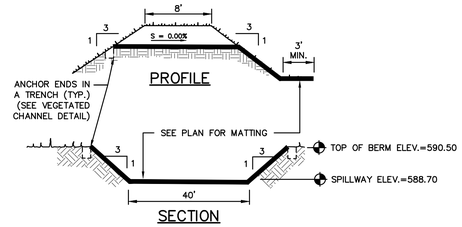

EMERGENCY SPILLWAY (EXISTING)

NOT TO SCALE

NOTES:
PLACE #57 COARSE AGGREGATE, TAMPED IN LAYERS 6" THICK, STARTING AT THE LOWEST ROWS OF PERFORATIONS OR THE OPEN JOINT (1/3 PIPE CIRCUMFERENCE) SYMMETRICALLY ABOUT THE VERTICAL CENTERLINE.
PROVIDE MATERIALS AND CONSTRUCTION MEETING THE REQUIREMENTS OF PUBLICATION 408, SECTION 610 FOR PAVEMENT BASE DRAIN, SECTION 612 FOR SUBGRADE DRAINS AND SECTION 604 FOR COMBINATION STORM SEWER AND UNDERDRAIN.

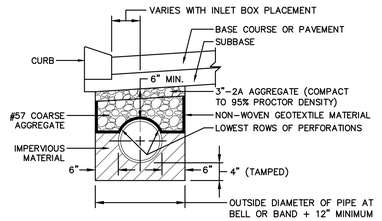

COMBINATION STORM SEWER AND UNDERDRAIN

NOT TO SCALE

NOTE:
SECTION 104 - PAVEMENT BASE DRAINS
1. PAVEMENT BASE DRAINS ARE SUBSURFACE DRAINS UTILIZING PERFORATED OR POROUS PIPE INSTALLED PARALLEL TO THE ROADWAY TO LOWER THE GROUNDWATER LEVEL, TO DRAIN SLOPES OR TO TO DRAIN THE PAVEMENT STRUCTURE. REFER TO THE LATEST VERSION OF THE COMMONWEALTH OF PENNSYLVANIA, PENNSYLVANIA DEPARTMENT OF TRANSPORTATION, BUREAU OF DESIGN, DESIGN MANUAL PART 2 - HIGHWAY DESIGN, PUBLICATION 13M, SECTION 2, CHAPTER 10.5 FOR THE DESIGN OF PAVEMENT BASE DRAINS. ALLOWABLE TYPES OF PIPES FOR BASE DRAINS ARE AS LISTED IN THE LATEST VERSION OF THE COMMONWEALTH OF PENNSYLVANIA, DEPARTMENT OF TRANSPORTATION SPECIFICATION, PUBLICATION 408, SECTION 610.2. PAVEMENT BASE DRAIN INSTALLATION SHALL BE COMPLETED ACCORDING TO THE LATEST VERSION OF THE COMMONWEALTH OF PENNSYLVANIA, DEPARTMENT OF TRANSPORTATION, BUREAU OF HIGHWAY DESIGN, STANDARDS FOR ROADWAY CONSTRUCTION, RC-30M.

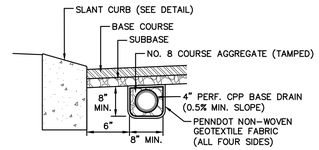

NOTE:
1. SEE PLAN FOR LOCATION OF BASE DRAIN.

PAVEMENT BASE DRAIN DETAIL

NOT TO SCALE

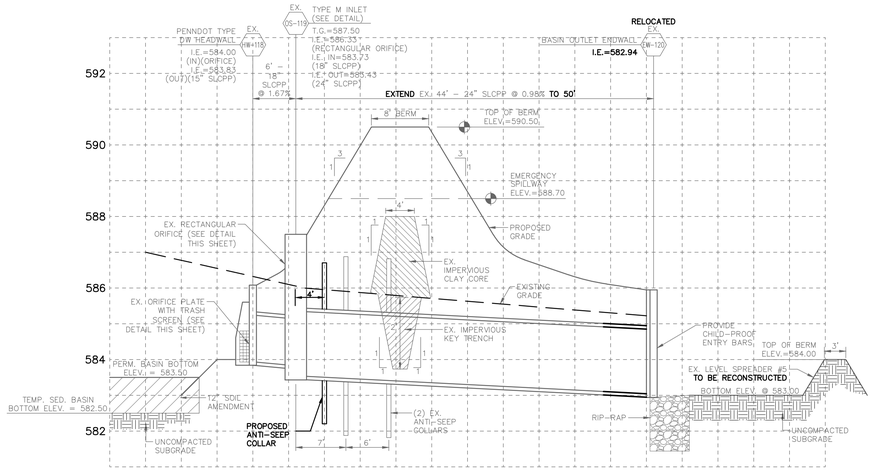

NOTES:
1. BASIN EMBANKMENT & BACKFILL AROUND ANTI-SEEP COLLARS SHALL BE COMPACTED TO 95% PROCTOR DENSITY.
2. CLAY CORE AND KEY TRENCH SHALL EXTEND ENTIRE LENGTH OF BASIN BERM.
3. ENSURE PROPER COMPACTION OF CLAY LINING AROUND OUTLET STRUCTURE AND ENDWALLS IN BASIN.
4. SEE LIMITED GEOTECHNICAL ENGINEERING REPORT BY RETTEW ASSOCIATES, INC. FOR EMBANKMENT CONSTRUCTION SPECIFICATIONS.

EXTENDED DETENTION/WETLAND BASIN #5 EMBANKMENT SECTION (BMP)(EXISTING)

SCALE: HORIZ. - 1"=10'
VERT. - 1"=2'

RETENTION BASIN WILDLIFE MIX
(ERNMX-127)
APPLICATION RATE - 20 POUNDS PER ACRE OR 1/2 LB PER 1,000 S.F.

30%	PANICUM CLANDESTINUM	DEERTONGUE, TIOGA
29.5%	CAREX VULPINOIDEA	FOX SEDGE
20%	ELYMUS VIRGINICUS	VIRGINIA WILDRYE
7%	CAREX LURIDA	LURID SEDGE
7%	CAREX SCOPARIA	BLUNT BROOM SEDGE
3%	VERBENA HASTATA	BLUE VERVAIN
1.5%	JUNCUS EFFUSUS	SOFT RUSH
0.5%	AGROSTIS PERENNANS	AUTUMN BENTGRASS
0.5%	ASCLEPIAS INCARNATA	SWAMP MILKWEED
0.3%	SCIRPUS CYPERINUS	WOOLGRASS
0.2%	HELENIUM AUTUMNALE	COMMON SNEEZEWEED
0.1%	ASTER NOVAE-ANGLIAE	NEW ENGLAND ASTER
0.1%	ASTER PUNICEUS	PURPLESTEM ASTER
0.1%	ASTER UMBELLATUS	FLAT TOPPED WHITE ASTER
0.1%	EUPATORIUM PERFOLIATUM	BONESET
0.1%	LOBELIA SIPHILITICA	GREAT BLUE LOBELIA

SEED CAN BE OBTAINED BY CONTACTING:
ERNST CONSERVATION SEEDS
8884 MERCER PIKE MEADVILLE, PA 16335
(800)873-3321 WWW.ERNSTSEED.COM

NOTE:
IN ADDITION TO THE ABOVE MIX, APPLY A TEMPORARY COVER CROP OF ONE OF THE FOLLOWING: GRAIN RYE (1 SEP TO 30 APR; 30 LBS/ACRE), JAPANESE MILLET (1 MAY TO 31 AUG; 10 LBS/ACRE), OR BARNYARD GRASS (1 MAY TO 31 AUG; 10 LBS/ACRE).

ERNMX-127 SEEDING

NOT TO SCALE

NATIVE STEEP SLOPE MIX W/ ANNUAL RYEGRASS
(ERNMX-181)
APPLICATION RATE - 60 POUNDS PER ACRE OR 1.5 LB PER 1,000 S.F.

31.1%	SORGHASTRUM NUTANS	INDIANGRASS
20%	LOLIUM MULTIFLORUM	ANNUAL RYEGRASS
14%	ANDROPOGON GERARDII	BIG BLUESTEM, 'NIAGARA'
10%	ELYMUS VIRGINICUS	VIRGINIA WILDRYE
7%	ELYMUS CANADENSIS	CANADA WILDRYE
4%	AGROSTIS PERENNANS	AUTUMN BENTGRASS
4%	PANICUM VIRGATUM	SWITCHGRASS, 'CARTHAGE'
3%	PANICUM CLANDESTINUM	DEERTONGUE, TIOGA
1.5%	ECHINACEA PURPUREA	PURPLE CONEFLOWER
1.3%	CHAMAECRISTA FASCICULATA	PARTRIDGE PEA
1.2%	HELIOPSIS HELIANTHOIDES	OXEYE SUNFLOWER
1.0%	COREOPSIS LANCEOLATA	LANCELEAF COREOPSIS
1.0%	RUDBECKIA HIRTA	BLACKEYED SUSAN
0.3%	MONARDA FISTULOSA	WILD BERGAMOT
0.2%	ASCLEPIAS SYRIACA	COMMON MILKWEED
0.2%	SOLIDAGO RUGOSA	WRINKLELEAF GOLDENROD
0.1%	ASTER LATERIFLORUS	CALICO ASTER
0.1%	ASTER PILOSUS	HEATH ASTER

SEED CAN BE OBTAINED BY CONTACTING:
ERNST CONSERVATION SEEDS
8884 MERCER PIKE MEADVILLE, PA 16335
(800)873-3321 WWW.ERNSTSEED.COM

ERNMX-181 SEEDING

NOT TO SCALE

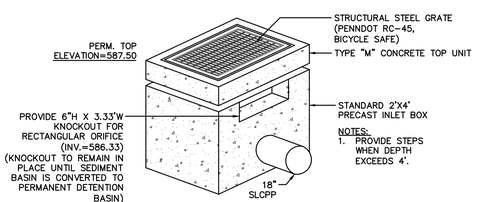

EX. BASIN 5 OUTLET STRUCTURE (OS-119)

NOT TO SCALE

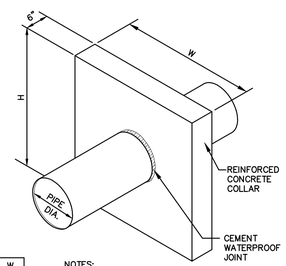

	BASIN	H (FT.)	W (FT.)
(EX)	5	5'-0"	5'-0"
(PROP)	5	4'-6"	4'-6"

NOTES:
1. MIN. CONCRETE COMPRESSIVE STRENGTH = 3,750 P.S.I.
2. REINFORCEMENT SHALL BE 6x6 W4.0xW4.0 OR #3 REBAR SPACED 12" EACH WAY, CENTERED WITHIN COLLAR
3. SEE BASIN EMBANKMENT SECTION DETAIL FOR LOCATION.
4. COMPACT BACKFILL AROUND COLLAR TO 95% PROCTOR DENSITY.

REINFORCED CONCRETE ANTI-SEEP COLLAR

NOT TO SCALE

NO.	DATE	REVISION
2	4-25-22	REVISED PER N.L.T. LEB. CO. ENGINEER & CITY OF LEB. AUTHORITY
1	2-1-22	REVISED PER N.L.T. LEB. CO. ENGINEER, LCPD, NLTMA, & CITY OF LEB. AUTHORITY

FOR PIONEER MANAGEMENT BY:

SURV. CHIEF: RC | FIELDBOOK NO.: VALUE
MANAGER: JAMES C. HENKE | DRAWN BY: RC | CHKD BY: RC
DESIGN BY: JDB/KWG | CHKD BY: JDB/JCH
DRAWING REFERENCE: F:\12\12-0950-02\CAD\Final PH\Details.dwg
XREFS: TB (F:\12\12-0950-02\CAD\Final PH\LV-xref\TB.dwg)

CLIENT
LANDMARK HOMES AT SWEETBRIAR
c/o MR. CLIFF WEAVER
1737 WEST MAIN STREET
EPHRATA, PA 17522
(717) 733-1536

SCALE: AS NOTED

PIONEER Management, LLC
111 Millersville Road, Lancaster, PA 17603
Phone: (717) 481-1930 Fax: (717) 481-4955
Email: jh@pioneermanagementllc.com
Website: www.pioneermanagementllc.com

STORMWATER DETAILS
FINAL PHASE 4 & REVISED FINAL PHASE 3 SUBDIVISION PLAN
FOR
THE CROSSINGS AT SWEET BRIAR
NORTH LEBANON TOWNSHIP LEBANON COUNTY, PA

DATE: JUNE 25, 2021
SHEET NO. 43 OF 43
DWG. NO. 12-0950-02-F