FINAL LAND DEVELOPMENT PLAN
FOR
MAPLEDALE ESTATES
NORTH LEBANON TOWNSHIP LEBANON COUNTY, PA

GENERAL NOTES

1. THE INTENT OF THIS PLAN IS TO SUBDIVIDE THIS SITE BY CREATING STREETS, INTENDED FOR PUBLIC DEDICATION, WHICH WILL BE FRONTED BY 38 SINGLE-FAMILY DETACHED RESIDENTIAL LOTS SERVED BY PUBLIC WATER AND SANITARY SEWER.
2. TOPOGRAPHIC AND PLANIMETRIC INFORMATION DEPICTED ON THIS PLAN HAS BEEN DERIVED FROM AN ACTUAL FIELD SURVEY PERFORMED BY HERSHEY SURVEYING, INC ON OR BEFORE APRIL 25, 2018.
3. SURVEY BENCHMARK: SEE PLAN FOR LOCATION AND ELEVATION DATA
   DATUM: NAVD 1988
4. BASIS OF BEARING IS GRID NORTH, PENNSYLVANIA STATE PLAN SOUTH ZONE.

NOTES CONTINUED ON SHEET 2.

CERTIFICATION FOR REVIEW BY THE PLANNING COMMISSION:

REVIEWED BY THE NORTH LEBANON TOWNSHIP PLANNING COMMISSION THIS _____ DAY

OF __________________, 20____.

____
CHAIRPERSON

CERTIFICATION FOR FINAL PLAN APPROVAL BY THE BOARD OF SUPERVISORS:

BY RESOLUTION ON THIS _____ DAY OF __________________, 20____, THE NORTH LEBANON TOWNSHIP BOARD OF SUPERVISORS REVIEWED THIS PROJECT.

____
CHAIRPERSON

____

____

CERTIFICATION OF ACCURACY (SURVEY):

I HEREBY CERTIFY THAT, TO THE BEST OF MY KNOWLEDGE, THE SURVEY SHOWN AND DESCRIBED HEREON IS TRUE AND CORRECT TO THE ACCURACY REQUIRED BY THE LEBANON COUNTY SUBDIVISION AND LAND DEVELOPMENT ORDINANCE.

____________, 20___ * ______________________________



CERTIFICATION OF ACCURACY (PLAN):

I HEREBY CERTIFY THAT, TO THE BEST OF MY KNOWLEDGE, THE PLAN SHOWN AND DESCRIBED HEREON IS TRUE AND CORRECT TO THE ACCURACY REQUIRED BY THE LEBANON COUNTY SUBDIVISION AND LAND DEVELOPMENT ORDINANCE.

____________, 20___ * ______________________________

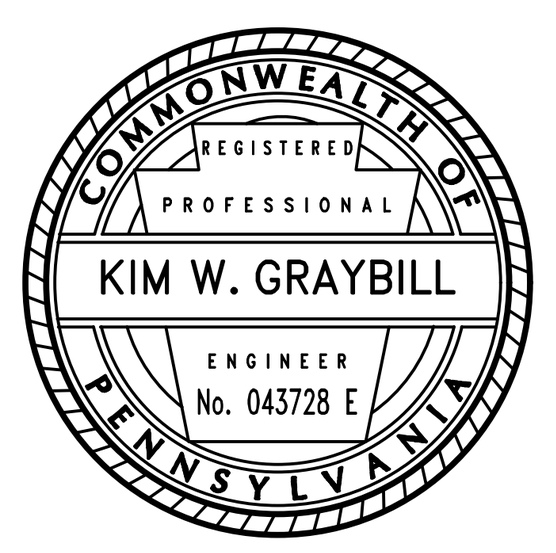

STORM WATER MANAGEMENT PLAN CERTIFICATION:

I HEREBY CERTIFY THAT, TO THE BEST OF MY KNOWLEDGE, THE STORM WATER DRAINAGE FACILITIES SHOWN AND DESCRIBED HEREON ARE DESIGNED IN CONFORMANCE WITH THE STORM WATER MANAGEMENT REQUIREMENTS OF LEBANON COUNTY.

____________, 20___ * ______________________________

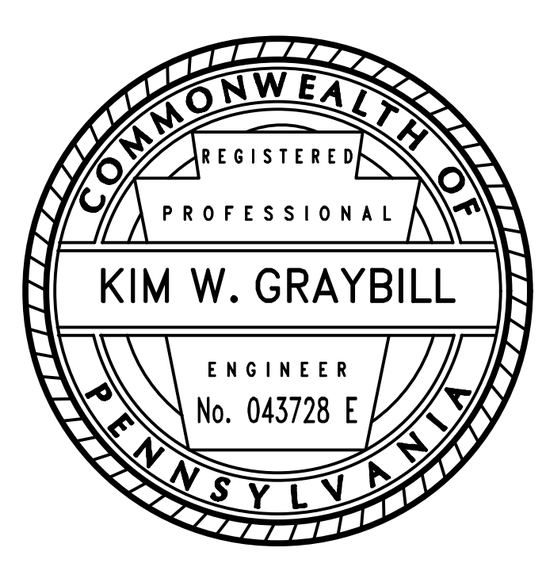

CARBONATE GEOLOGY STATEMENT:

I, ____,
CERTIFY THAT THE PROPOSED DETENTION BASINS ARE/ARE NOT (CIRCLE ONE) UNDERLAIN BY LIMESTONE.

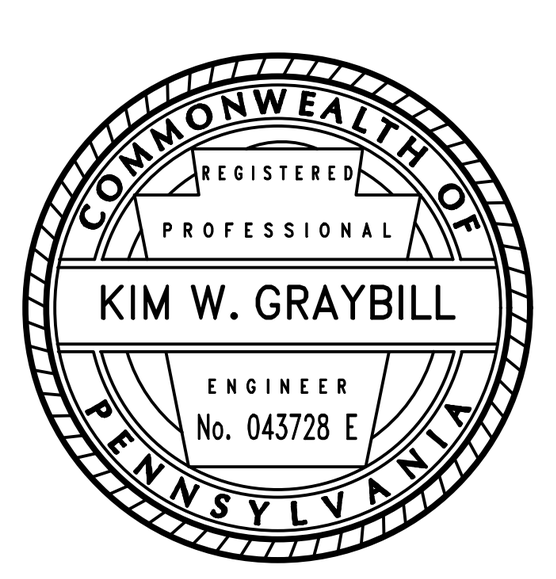

LEBANON COUNTY PLANNING DEPARTMENT REVIEW CERTIFICATE:

THIS PLAN WAS APPROVED FOR NORTH LEBANON TOWNSHIP BY

THE LEBANON COUNTY PLANNING DEPARTMENT THIS _____ DAY

OF __________, 20__.

____

CERTIFICATE OF REVIEW BY THE LEBANON COUNTY ENGINEER:

REVIEWED BY THE LEBANON COUNTY ENGINEER THIS

____________ DAY OF ______________, 20___.

____

CERTIFICATE OF OWNERSHIP, ACKNOWLEDGMENT OF PLAN AND OFFER OF DEDICATION:

COMMONWEALTH OF PENNSYLVANIA – COUNTY OF LEBANON

CORPORATION:

ON THIS THE _____ DAY OF ______________, 20___, BEFORE ME, THE UNDERSIGNED OFFICER, PERSONALLY APPEARED S. GERALD MUSSER, BEING ____________ OF MOUNT PLEASANT VENTURES, LLC, WHO BEING DULY SWORN ACCORDING TO LAW, DEPOSES AND SAYS THAT THE CORPORATION IS THE OWNER OF THE PROPERTY SHOWN ON THIS PLAN, THAT HE IS AUTHORIZED TO EXECUTE SAID PLAN ON BEHALF OF THE CORPORATION, THAT THE PLAN IS THE ACT AND DEED OF THE CORPORATION, THAT THE CORPORATION DESIRES THE SAME TO BE RECORDED AND ON BEHALF OF THE CORPORATION FURTHER ACKNOWLEDGES THAT ALL STREETS AND OTHER PROPERTY IDENTIFIED AS PROPOSED PUBLIC PROPERTY (EXCEPTING THOSE AREAS LABELED "NOT FOR DEDICATION") ARE HEREBY DEDICATED TO THE PUBLIC USE.

____

IN WITNESS WHEREOF, I HEREUNTO SET MY HAND AND OFFICIAL SEAL.

____
NOTARY PUBLIC

MY COMMISSION EXPIRES ____________.
(NOTARY SEAL)

CERTIFICATE OF OWNERSHIP, ACKNOWLEDGMENT OF PLAN, AND OFFER OF DEDICATION

INDIVIDUALS

COMMONWEALTH OF PENNSYLVANIA
COUNTY OF LEBANON

ON THIS, THE _____ DAY OF ______________, 20__ BEFORE ME, THE UNDERSIGNED OFFICER, PERSONALLY APPEARED MARTIN LEE & CAROLYN W. HOOVER, WHO BEING DULY SWORN ACCORDING TO LAW, DEPOSE AND SAY THAT THEY ARE THE OWNERS OF THE PROPERTY SHOWN ON THIS PLAN, THAT THE PLAN THEREOF WAS MADE AT THEIR DIRECTION, THAT THEY ACKNOWLEDGE THE SAME TO BE THEIR ACT AND PLAN, THAT THEY DESIRE THE SAME TO BE RECORDED, AND THAT ALL STREETS AND OTHER PROPERTY IDENTIFIED AS PROPOSED PUBLIC PROPERTY SHOWN AND NOT HERETO FORE DEDICATED ARE HEREBY DEDICATED TO THE PUBLIC USE.

______________________ (OWNER) ______________________ (OWNER)

____
(NOTARY PUBLIC)

MY COMMISSION EXPIRES ____________________, 20____

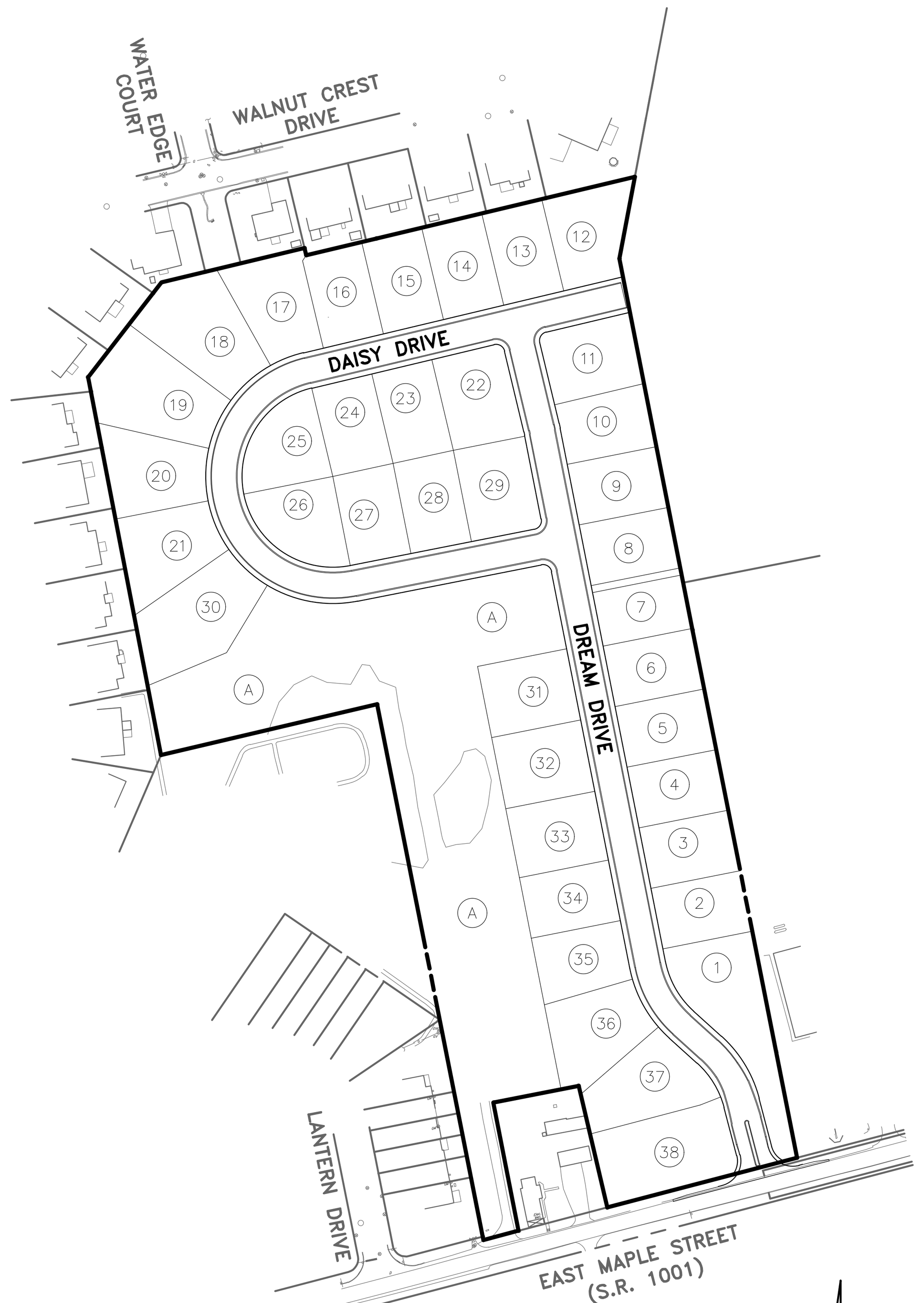

OVERALL TRACT
SCALE 1"=200'

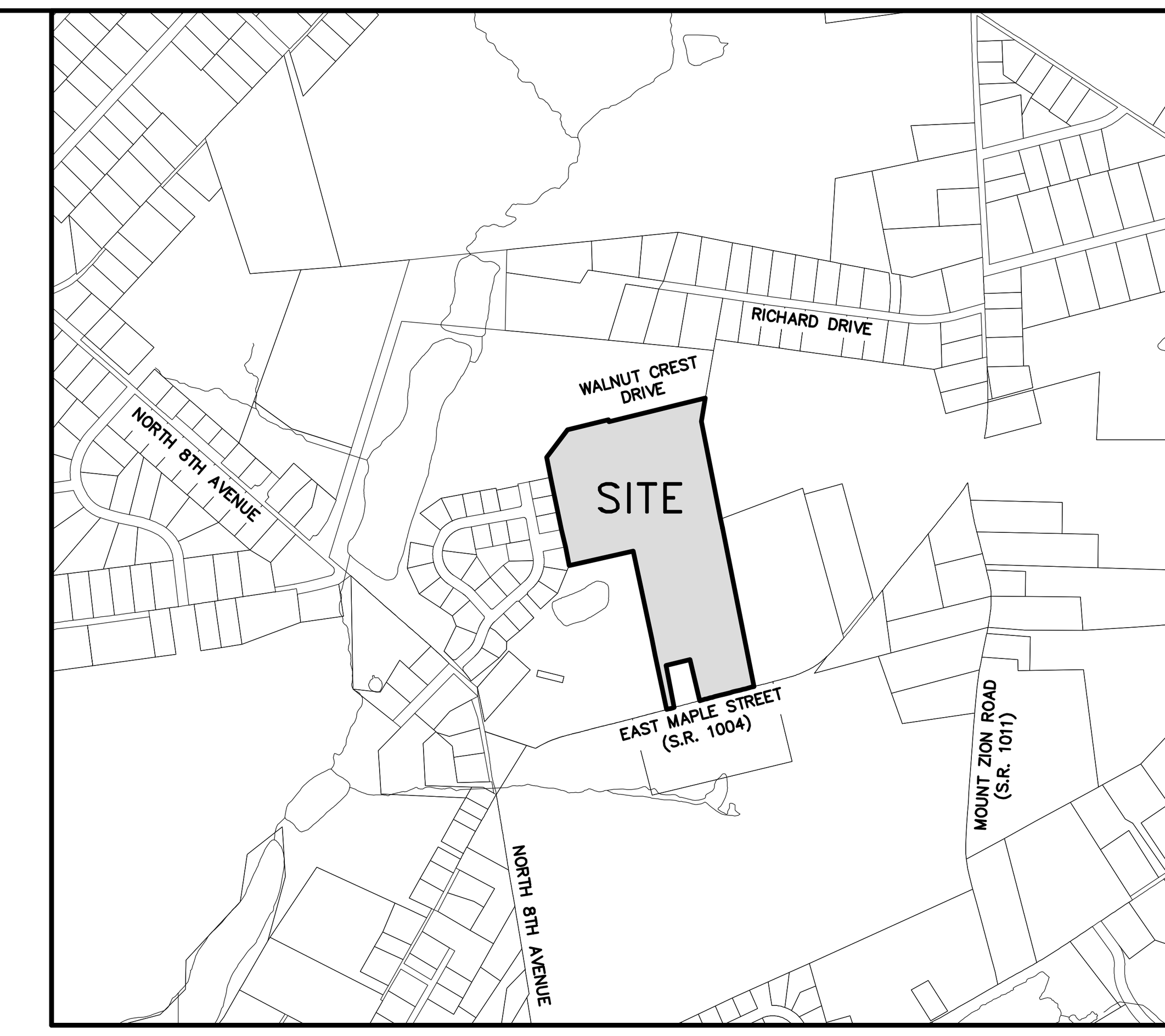

SITE LOCATION MAP
SCALE 1"=800'

ACT 187 UTILITIES RESPONDENTS

BUCKEYE PARTNERS
FIVE TEK PARK
9999 HAMILTON BOULEVARD
BREINIGSVILLE, PA 18031
CONTACT: DAVE JONES
PHONE: (610) 904-4000
E-MAIL: DAJONES@BUCKEYE.COM

COMCAST CABLE LEBANON
C/O USIC LOCATING SERVICES INC.
13085 HAMILTON CROSSING
BOULEVARD, SUITE 200
CARMEL, IN 46032
CONTACT: USIC OFFICE PERSONNEL
PHONE: (717) 273-8264

FIRST ENERGY CORP.
76 S. MAIN ST.
AKRON, OH 44308-1890
CONTACT: OFFICE PERSONNEL
PHONE: 1-888-544-4877

CITY OF LEBANON AUTHORITY
2311 RIDGEVIEW ROAD
LEBANON, PA 17042
CONTACT: BOB SENTZ
E-MAIL:
BSENTZ@LEBANONAUTHORITY.ORG
PHONE: (717) 272-2841

NORTH LEBANON TOWNSHIP
725 KIMMERLINGS ROAD
LEBANON, PA 17046
CONTACT:
ED BRENSINGER, ROAD MASTER
PHONE: (717) 273-7132
E-MAIL:
EBRENSINGER@NORTHLEBANONTWPPA.GOV

UGI UTILITIES INC.
1301 A I P DR.
MIDDLETOWN, PA 17057
CONTACT: JOANNE ARCHFIELD
PHONE: (717) 255-4347
EMAIL: JARCHFIELD@UGI.COM

VERIZON PENNSYLVANIA LLC
15 EAST MONTGOMERY AVE.
PITTSBURGH, PA 15212
CONTACT: OFFICE PERSONNEL
PHONE: (717) 777-4288

NORTH LEBANON TOWNSHIP
MUNICIPAL AUTHORITY (SEWER)
725 KIMMERLINGS ROAD
LEBANON, PA 17046
PHONE: (717) 273-7132

ACT 187 UNDERGROUND UTILITY PROTECTION ACT

HERSHEY SURVEYING, INC. HEREBY STATES THAT, PURSUANT TO THE PROVISIONS OF ACT NO. 287 OF 1974, AS AMENDED BY ACT 187 OF 1996, OF THE PENNSYLVANIA LEGISLATURE, IT HAS PERFORMED THE FOLLOWING IN PREPARING THESE DRAWINGS REQUIRING EXCAVATION OR DEMOLITION WORK AT SITES WITHIN THE POLITICAL SUBDIVISION(S) SHOWN ON THE DRAWINGS:

1. PURSUANT TO SECTION 4, CLAUSE (2) OF SAID ACT, HERSHEY SURVEYING, INC. REQUESTED FROM EACH USER'S OFFICE DESIGNATED ON SUCH LIST PROVIDED BY THE ONE CALL SYSTEM NOTIFICATION, THE INFORMATION PRESCRIBED BY SECTION 2, CLAUSE (4) OF SAID ACT, NOT LESS THAN (10) NOR MORE THAN (90) WORKING DAYS BEFORE FINAL DESIGN IS TO BE COMPLETED.
2. PURSUANT TO SECTION 4, CLAUSE (5) OF SAID ACT, HERSHEY SURVEYING, INC. HAS MET THEIR OBLIGATIONS OF CLAUSE (2) BY CALLING THE ONE CALL SYSTEM SERVING THE LOCATION WHERE EXCAVATION IS TO BE PERFORMED.
3. PURSUANT TO SECTION 4, CLAUSE (3) OF SAID ACT, HERSHEY SURVEYING, INC. HAS SHOWN UPON THESE DRAWINGS "THE POSITION AND TYPE OF EACH LINE, AS DERIVED PURSUANT TO THE REQUEST MADE AS REQUIRED BY CLAUSE (2), THE SERIAL NUMBER PROVIDED BY THE ONE CALL SYSTEM, THE TOLL-FREE ONE CALL SYSTEM PHONE NUMBER, AND THE NAME OF THE USER, THE USER'S DESIGNATED OFFICE ADDRESS AND PHONE NUMBER AS SHOWN ON THE LIST REFERRED TO IN SECTION 4, CLAUSE (5) OF SAID ACT."

HERSHEY SURVEYING, INC. DOES NOT MAKE ANY REPRESENTATION, WARRANTY, ASSURANCE OR GUARANTEE THAT THE INFORMATION RECEIVED PURSUANT TO SAID REQUEST AND AS REFLECTED ON THESE DRAWINGS IS CORRECT OR ACCURATE, BUT HERSHEY SURVEYING, INC. IS REFLECTING SAID INFORMATION ON THESE DRAWINGS ONLY DUE TO THE REQUIREMENTS OF THE SAID ACT NO. 187 OF DECEMBER 19, 1996.

ONE CALL SYSTEM SERIAL NO. NOTIFICATION BY HERSHEY SURVEYING, INC.

DATE: MARCH, 18 2021 SERIAL NUMBER: 20210770796

PA 1 CALL SYSTEM, INC.
1-800-242-1776

CALL BEFORE YOU DIG!
PENNSYLVANIA LAW REQUIRES (3) WORKING DAYS NOTICE FOR CONSTRUCTION PHASE AND (10) WORKING DAYS IN DESIGN STAGE - STOP CALL

PERMITS REQUIRED/ISSUED

PERMIT TYPE	CASE#/APP.#	DATE ISSUED	EXPIRATION DATE
NPDES	PAC380014	AUGUST 2, 2021	AUGUST 1, 2026
PLANNING MODULE EXEMPTION (TO LEB. CO.)	DLA CODE 27-11-20	MAY 26, 2020	N/A
HOP PERMIT (ROADWAY)	08101962	MARCH 13, 2020	MARCH 13, 2022
PENNDOT UTILITY PERMIT (WATERLINE)	08101937	MARCH 9, 2020	MARCH 9, 2022
PENNDOT UTILITY PERMIT (SANITARY SEWER)	08101936	MARCH 9, 2020	MARCH 9, 2022

PROPOSED STREETS INTENDED FOR DEDICATION TO NORTH LEBANON TOWNSHIP

DREAM DRIVE = ±1,257 L.F.
DAISY DRIVE = ±1,212 L.F.
TOTAL = ±2,469 L.F.

ASSOCIATED REPORTS/DOCUMENTS

PERMIT TYPE	PREPARED BY	LAST REVISED
TRAFFIC IMPACT ASSESSMENT	RETTEW ASSOCIATES, INC.	FEB. 21, 2019
WETLANDS INVESTIGATION REPORT	VORTEX ENVIRONMENTAL, INC.	MAY 28, 2019
PCSM REPORT, E&S REPORT, WETLAND IMPACT ANALYSIS	PIONEER MANAGEMENT, LLC	JUNE 18, 2021
PRELIMINARY SUBDIVISION & LAND DEVELOPMENT PLAN OF MAPLEDALE ESTATES (APPROVED ON MARCH 16, 2020)	PIONEER MANAGEMENT, LLC	FEB. 20, 2020

CONTRACTOR NOTES

1. CONTRACTOR SHALL VERIFY ALL SITE ELEVATIONS AND DIMENSIONS PRIOR TO THE START OF CONSTRUCTION. ANY DISCREPANCY SHALL BE BROUGHT TO THE DESIGN ENGINEER'S ATTENTION IMMEDIATELY.
2. ALL IMPROVEMENTS SHALL BE CONSTRUCTED IN ACCORDANCE WITH THE CURRENT IMPROVEMENT SPECIFICATIONS MANUAL OF THE TOWNSHIP.
3. ALL MATERIALS AND INSTALLATIONS SHALL COMPLY WITH PENNSYLVANIA DEPARTMENT OF TRANSPORTATION PUBLICATION 408, LATEST EDITION.
4. A PENNSYLVANIA DEPARTMENT OF ENVIRONMENTAL PROTECTION NPDES CONSTRUCTION ACTIVITIES PERMIT IS REQUIRED FOR THIS PROJECT. NO EARTH DISTURBANCE ACTIVITIES SHALL COMMENCE UNTIL THIS PERMIT HAS BEEN OBTAINED. A COPY OF THE EROSION AND SEDIMENT CONTROL PLAN AND NPDES PERMIT SHALL BE AVAILABLE AT THE PROJECT SITE AT ALL TIMES.
5. WHEREVER POSSIBLE, NATURAL FEATURES OF THE SITE SUCH AS LARGE TREES, WOODED AREAS AND NATURAL WATER COURSES AND BODIES OF WATER SHALL BE PRESERVED DURING CONSTRUCTION.
6. IT SHALL BE THE RESPONSIBILITY OF THE CONTRACTOR TO COORDINATE WITH THE APPROPRIATE UTILITY COMPANY FOR THE REMOVAL, ABANDONMENT, RELOCATION OR INSTALLATION OF ANY PUBLIC UTILITY (GAS, ELECTRIC, TELEPHONE, CABLE TV AND FIBER OPTIC COMMUNICATIONS).
7. IF UNFORESEEN SUBSURFACE OR GEOLOGIC CONDITIONS ARE ENCOUNTERED, INCLUDING BUT NOT LIMITED TO DUMPS, FOUNDATIONS, ARCHAEOLOGICAL ARTIFACTS OR FEATURES, SPRINGS, ROCK SINKHOLES, ETC., THE CONTRACTOR SHALL STOP WORK IMMEDIATELY AND NOTIFY PIONEER MANAGEMENT, LLC AND THE OWNER.
8. WHERE ROCK IS ENCOUNTERED AT OR ABOVE THE PLANNED CONDUIT DESIGN GRADE, THE ROCK SHALL BE UNDERCUT AND OVER-EXCAVATED A MINIMUM OF ONE FOOT AND BACKFILLED WITH A COMPACTED FINE GRAINED SOIL.
9. DURING THE CONSTRUCTION PROCESS, ALL ENCOUNTERED SINKHOLES SHALL BE REMEDIATED IN ACCORDANCE WITH THE RECOMMENDATIONS OF A LICENSED PROFESSIONAL. RECORD PLANS OF THE REMEDIATION WORK SHALL BE PROVIDED TO THE TOWNSHIP AFTER COMPLETION OF THE REMEDIATION.
10. ALL IMPROVEMENTS SHALL BE INSPECTED BY THE TOWNSHIP ENGINEER AND/OR ROADMASTER. INSPECTIONS SHALL BE REQUIRED PRIOR TO THE START OF CONSTRUCTION, DURING INSTALLATION OF MATERIALS AND STRUCTURES, AND UPON THE COMPLETION OF ALL IMPROVEMENTS. PRIOR TO THE INITIATION OF CONSTRUCTION, THE DEVELOPER SHALL ARRANGE A PRE-CONSTRUCTION MEETING WITH THE TOWNSHIP ENGINEER AND/OR ROADMASTER SO THAT AN INSPECTION SCHEDULE CAN BE COORDINATED WITH THE CONSTRUCTION SCHEDULE. THE TOWNSHIP ENGINEER AND/OR ROADMASTER SHALL BE NOTIFIED TWO WORKING DAYS IN ADVANCE OF ANY INTENDED DATE OF CONSTRUCTION. (DEVELOPER IS REQUIRED TO ATTEND A PRE-CONSTRUCTION MEETING PRIOR TO COMMENCEMENT OF WORK & PLACEMENT OF CASH ESCROW WITH BOARD OF SUPERVISORS FOR INSPECTIONS.)
11. CONTRACTOR SHALL NOTIFY THE AUTHORITY PRIOR TO PLACING AND COMPACTING FILL. THE CONTRACTOR SHALL CONDUCT COMPACTION TESTS UPON REQUEST BY THE AUTHORITY.
12. THE CONTRACTOR SHALL COMPLY WITH ALL CONSTRUCTION RELATED NOTES PROVIDED ON THE POST-CONSTRUCTION STORMWATER MANAGEMENT AND EROSION AND SEDIMENTATION CONTROL PLANS AND DETAILS.
13. BACKFILLING SHALL BE TO FOUR (4) FEET ABOVE THE TOP OF THE PROPOSED PIPE ELEVATION OR TO SUBGRADE, WHICHEVER IS LESS, BEFORE EXCAVATING FOR THE PIPE. ADDITIONALLY, HAULING SHALL NOT BE PERMITTED OVER PIPE WITH LESS THAN FOUR (4) FEET OF COVER.
14. ALL PAVING SEEMS, INCLUDING AT CURBS, INLETS AND MANHOLES TO BE SEALED USING PG 46-22 OR EQUIVALENT
15. INSPECTIONS OF THE RETAINING WALL CONSTRUCTION ARE REQUIRED BY A LICENSED PROFESSIONAL ENGINEER. ALL INSPECTION AND TESTING REPORTS SHALL BE PROVIDED TO THE COUNTY ENGINEER AND LCPD WITHIN 10 DAYS OF THE INSPECTION. REFER TO SHEET 29A FOR REQUIRE INSPECTIONS.

OWNER DATA

MOUNT PLEASANT VENTURES, LLC
c/o MR. S. GERALD MUSSER
144 BELL ROAD
PALMYRA, PA 17078
(717) 821-1129

UPI

27-2345602-377203-0000
(EXISTING LOT 1)
27-2345038-378104-0000
(EXISTING LOT 2)

DEED REF.

02248-4961

SITE DATA

ZONING:	CURRENTLY R-2 – HIGH DENSITY RESIDENTIAL DISTRICT
EXISTING TOTAL TRACT AREA:	17.88 ACRES (GROSS ACREAGE)
NUMBER OF LOTS:	38 PROPOSED RESIDENTIAL LOTS
NUMBER OF OPEN SPACE LOTS:	1 PROPOSED OPEN SPACE LOT (LOT A: HOA OWNED)
PROPOSED USE:	SINGLE-FAMILY DETACHED RESIDENTIAL LOTS
NO. OF DWELLING UNITS:	38 PROPOSED SINGLE-FAMILY DWELLING UNITS
DENSITY:	2.13 DWELLING UNITS/ACRE (38 D.U./17.88 AC.) (TOTAL)
WATER SERVICE:	PUBLIC WATER
SANITARY SEWER SERVICE:	PUBLIC SEWER
LINEAR FEET OF STREET	2,469 L.F.

ZONING DATA FROM NORTH LEBANON TOWNSHIP ZONING ORDINANCE
R-2 – HIGH DENSITY RESIDENTIAL DISTRICT

SINGLE-FAMILY DETACHED DWELLINGS SERVED BY PUBLIC WATER AND PUBLIC SEWER

	REQUIRED
MINIMUM LOT AREA:	9,000 S.F. PER DWELLING UNIT
MINIMUM LOT WIDTH:	85'
SETBACK REQUIREMENTS:	
FRONT	30'
SIDE	10' (20' TOTAL SIDES)
REAR	30'
MAXIMUM BUILDING HEIGHT:	2.5 STORIES OR 35' (PRINCIPAL BUILDING)
MAXIMUM LOT COVERAGE:	40%

WAIVERS APPROVED

FROM LEBANON COUNTY SUBDIVISION AND LAND DEVELOPMENT ORDINANCE

ORDINANCE LOCATION	DESCRIPTION	ACTION & DATE
SECTION 4.02.C.3	REQUIRED: EXISTING FEATURES WITHIN 100' OF THE PROPERTY BOUNDARY. PROPOSED: MOST OF THE REQUIRED INFORMATION WITHIN 100' OF THE BOUNDARY IS PROVIDED. SOME TOPOGRAPHY IS BEING SUPPLEMENTED WITH GIS INFORMATION.	APPROVED ON 02/21/20
SECTION 5.02.D	REQUIRED: LOT DEPTH SHALL NOT BE LESS THAN 1 TIMES THE LOT WIDTH. PROPOSED: LOTS 1, 21 & 35 DO NOT MEET THE REQUIRED RATIO.	APPROVED ON 02/21/20
SECTION 5.10.C.8.e.iv	REQUIRED: MEDIUM STREET TREES SHALL BE SPACED 40'-50' APART. PROPOSED: MINIMUM OF 1 TREE PER LOT BUT TOTAL OF 47 STREET TREES.	APPROVED ON 02/21/20
SECTION 5.11	REQUIRED: MONUMENTS ARE REQUIRED EVERY 2 LOTS OR EVERY 200', WHICHEVER IS LESS. PROPOSED: MONUMENTS ON ONE SIDE OF EACH STREET, EXCEPT A UNIQUE SCENARIO WHERE 1 MONUMENT WAS REMOVED DUE TO BEING IN A DRIVEWAY ON BOTH SIDES OF THE STREET.	APPROVED ON 02/21/20

FROM LEBANON COUNTY STORMWATER MANAGEMENT ORDINANCE

ORDINANCE LOCATION	DESCRIPTION	ACTION & DATE
SECTION 305.C	REQUIRED: SIDE SLOPES OF BASINS SHALL HAVE A MAXIMUM SIDE SLOPE OF 5 HORIZONTAL TO 1 VERTICAL. PROPOSED: BOULDER RETAINING WALLS WITH FENCE ABOVE.	APPROVED ON 02/21/20
SECTION 307.A	REQUIRED: INLET TOPS CONFORMING TO PENNDOT STANDARDS. PROPOSED: TYPE C INLETS: USE OF 8" HOODS/REVEALS WITH 2" SUMP AND USE OF 6" HOODS/RELEALS WITH NO SUMP.	APPROVED ON 02/21/20
SECTION 307.A	REQUIRED: RC-45M INLET TOPS. PROPOSED: RC-34M INLET TOP FOR INLET I-2.	APPROVED ON 02/21/20

SHEET INDEX

*SHEET 1 – COVER SHEET
*SHEET 2 – NOTES AND CHARTS
*SHEET 3 – EXISTING FEATURES AND DEMOLITION PLAN
SHEET 4 – OVERALL LAYOUT PLAN
*SHEETS 5-6 – LAYOUT PLAN
*SHEETS 7-8 – EASEMENT PLAN
*SHEET 9 – EASEMENT PLAN – LINE AND CURVE TABLES
*SHEETS 10-11 – LANDSCAPING AND LIGHTING PLAN
SHEETS 12-13 – GRADING PLAN
SHEETS 14-15 – UTILITY PLAN
*SHEETS 16-17 – POST CONSTRUCTION STORMWATER MANAGEMENT PLAN
*SHEET 18 – SOIL AMENDMENT PLAN
SHEETS 19-20 – EROSION AND SEDIMENTATION CONTROL PLAN
SHEET 21 – DREAM DRIVE PLAN AND PROFILE
SHEET 22 – DAISY DRIVE PLAN AND PROFILE
SHEET 23 – EAST MAPLE ST (SR 1001) PLAN AND PROFILE
*SHEET 24 – STORMWATER & SANITARY SEWER OVERLAND PROFILES
SHEETS 25-26 – SANITARY SEWER DETAILS
SHEETS 27-28 – WATERLINE DETAILS
SHEET 29 – SITE CONSTRUCTION DETAILS
SHEETS 29A-29C – RETAINING WALL DESIGNS
*SHEET 30 – OPERATION AND MAINTENANCE AGREEMENT & NOTES
*SHEETS 31-32 – STORMWATER DETAILS
SHEETS 34-35 – EROSION AND SEDIMENTATION CONTROL DETAILS
SHEET 36 – EROSION AND SEDIMENTATION CONTROL NOTES AND DETAILS

*DENOTES PLAN SHEETS TO BE RECORDED

NO.	DATE	REVISION
3	12-21-21	REVISED PER N. LEB. TWP., LEB. CNTY. ENG. & THE REVISED WALL DESIGN
2	9-29-21	REVISED PER SEWER AUTH., N. LEB. TWP., LEB. CNTY. ENG. & THE REVISED WALL DESIGN
1	6-18-21	REVISED PER LCCD, DEP, SEWER AUTH., N. LEB. TWP., & LCPD

FOR PIONEER MANAGEMENT BY:
MANAGER: JAMES C. HENKE | SURV. CHIEF: | FIELDBOOK NO.
DESIGN BY: JDB/KWG | CHKD BY: JDB/JCH | DRAWN BY: JDB/MLS | CHKD BY: JCH
DRAWING REFERENCE: F:\18\18-2000-01\CAD\Final Plan\Cover.dwg

XREFS:
TB [F:\18\18-2000-01\CAD\Final Plan\X-Refs\TB.dwg]
HSI-SURVEYBASE [F:\18\18-2000-01\CAD\Final Plan\X-Refs\HSI-SurveyBase.dwg]
P-Base [F:\18\18-2000-01\CAD\Final Plan\X-Refs\P-Base.dwg]
Street Alignments [F:\18\18-2000-01\CAD\Final Plan\C3D-Bases\Street Alignments.dwg]
Site Location [F:\18\18-2000-01\CAD\Final Plan\X-Refs\Site Location.dwg]

CLIENT
MR. S. GERALD MUSSER
144 BELL ROAD
PALMYRA, PA 17078
(717) 821-1129

SCALE
AS NOTED

PIONEER Management, LLC
111 Millersville Road, Lancaster, PA 17603
Phone (717) 481-5500 · Fax (717) 481-4955
Email: jh@pioneermanagementllc.com
Website: www.pioneermanagementllc.com

COVER SHEET
FOR THE FINAL SUBDIVISION AND LAND DEVELOPMENT PLAN OF
MAPLEDALE ESTATES
NORTH LEBANON TOWNSHIP LEBANON COUNTY, PA

DATE: FEB. 25, 2021
SHEET NO. 1 OF 36
DWG. NO. 18-2000-01-B

F:\18\18-2000-01\CAD\Final Plan\Cover.dwg, 1 COVER SHEET, 12/21/2021 1:45:26 PM, 1:1

F:\18\18-2000-01\CAD\Final Plan\Cover.dwg, 2 NOTES AND CHARTS, 12/21/2021 1:46:38 PM, 1:1

GENERAL NOTES

1. THE INTENT OF THIS PLAN IS TO SUBDIVIDE THIS SITE BY CREATING STREETS, INTENDED FOR PUBLIC DEDICATION, WHICH WILL BE FRONTED BY SINGLE-FAMILY DETACHED RESIDENTIAL LOTS SERVED BY PUBLIC WATER AND SANITARY SEWER.
2. TOPOGRAPHIC AND PLANIMETRIC INFORMATION DEPICTED ON THIS PLAN HAS BEEN DERIVED FROM AN ACTUAL FIELD SURVEY PERFORMED BY HERSHEY SURVEYING, INC ON OR BEFORE APRIL 25, 2018.
3. SURVEY BENCHMARK: SEE PLAN FOR LOCATION AND ELEVATION DATA
   DATUM: NAVD 1988
4. BASIS OF BEARING IS GRID NORTH, PENNSYLVANIA STATE PLAN SOUTH ZONE.
5. UNDERGROUND UTILITY LOCATIONS ARE APPROXIMATE AND WERE DETERMINED FROM VISIBLE LOCATION, PA ONE CALL UTILITY RESPONSES AND/OR BEST AVAILABLE PLAN INFORMATION. HERSHEY SURVEYING, INC. CANNOT GUARANTEE THE EXACT LOCATION OF ANY UNDERGROUND UTILITIES OR STRUCTURES. AN EXACT LOCATION CAN ONLY BE OBTAINED BY SUBSURFACE EXPLORATION, WHICH IS NOT A PART OF THIS CONTRACT PERFORMANCE.
6. PIONEER MANAGEMENT, LLC MAKES NO REPRESENTATION AS TO SUBSURFACE CONDITIONS ON THE PROJECT SITE (I.E. THE EXISTENCE OF OR LOCATION OF ROCK, WATER TABLE, ETC.).
7. THERE SHALL BE NO CHANGES OR DEVIATION FROM THESE PLANS UNLESS APPROVED BY THE ENGINEER. SUCH PLAN CHANGES, SHOULD THEY BECOME NECESSARY, ARE SUBJECT TO MUNICIPAL/COUNTY ORDINANCES AND MUNICIPAL/COUNTY APPROVALS.
8. THE DEVELOPER SHALL BE FINANCIALLY RESPONSIBLE FOR ANY ATTORNEY FEES WHERE THE ATTORNEY IS ENGAGED ON BEHALF OF THE TOWNSHIP/AUTHORITY RELATING TO THE REVIEW OF THE SUBDIVISION PLANS OR LAND DEVELOPMENT PLANS THAT ARE SUBMITTED TO THE TOWNSHIP/AUTHORITY. THESE FEES ARE IN ADDITION TO SUBMISSION FEES CHARGED BY THE TOWNSHIP/AUTHORITY. PAYMENT OF ALL INVOICES IS DUE AND PAYABLE WITHIN 30 DAYS OF RECEIPT BUT IN ALL CASES PRIOR TO PLAN APPROVAL BY THE BOARD OF SUPERVISORS. ANY QUESTIONS ON INVOICES MUST BE REPORTED TO THE TOWNSHIP/AUTHORITY IN WRITING WITHIN 10 DAYS OF RECEIPT OF THE BILL.
9. ALL CONSTRUCTION SHALL BE SUBJECT TO THE REQUIREMENTS OF THE PENNSYLVANIA UNIFORM CONSTRUCTION CODE, AS ADOPTED BY THE MUNICIPALITY.
10. THE PROPOSED ROADWAY SYSTEM WILL BE PUBLIC STREETS AND ARE INTENDED TO BE DEDICATED TO THE TOWNSHIP.
11. PERMITS FROM THE TOWNSHIP MUST BE OBTAINED PRIOR TO ANY WORK IN THE TOWNSHIP RIGHT-OF-WAY.
12. ALL PROPOSED LOTS SHALL BE SERVICED BY PUBLIC SANITARY SEWER AND PUBLIC WATER.
13. THE DEVELOPER WILL, BY DEED OF DEDICATION, TRANSFER TO THE RESPECTIVE AUTHORITY THE SEWER MAINS, WATER MAINS AND ATTENDING PARAPHERNALIA IN THE PROJECT.
14. ALL LOTS WITH DWELLING UNITS SHALL BE FEE-SIMPLE TRANSFERS.
15. DRILL HOLES SHALL BE MADE IN THE PROPOSED CURB WHERE THE SIDE PROPERTY LINES WOULD INTERSECT WHEN EXTENDED WITHIN THE STREET RIGHT-OF-WAYS AND IRON PINS AT ALL OTHER PROPERTY CORNERS
16. CONCRETE MONUMENTS SHALL BE SET WHERE SHOWN ON THE LAYOUT PLANS AND INDICATING MARKERS TO BE SET UPON RECORDING, SUBJECT TO THE APPROVAL OF THE LEBANON COUNTY ENGINEER, TO GIVE FULL SURVEYING CONTROL OF EACH BLOCK, LOT AND ALL AREAS OF PROPOSED DEDICATION OR PUBLIC EASEMENT.
17. STREET MONUMENTS TO BE PLACED FOLLOWING FINAL SITE GRADING. ALL CONCRETE MONUMENTS MUST BE PLACED AT THE RIGHT-OR-WAY LINES PER NORTH LEBANON TOWNSHIP AND LEBANON COUNTY REQUIREMENTS.
18. THERE SHALL BE 2 OFF-STREET PARKING SPACES PROVIDED FOR EACH SINGLE-FAMILY LOT.
19. ALL DRIVEWAYS SHALL BE DESIGNED AND CONSTRUCTED TO THE STANDARDS OF NORTH LEBANON TOWNSHIP.
20. PROPOSED DRIVEWAYS AND HOUSE LOCATIONS SHOWN HEREON ARE FOR DEMONSTRATION PURPOSES ONLY. THE FINAL LOCATION MUST BE APPROVED BY THE DEVELOPER AND MEET TOWNSHIP SPECIFICATIONS AT THE TIME OF CONSTRUCTION ON THE INDIVIDUAL LOTS. DRIVEWAY PERMITS ARE REQUIRED FROM NORTH LEBANON TOWNSHIP FOR EACH LOT; ALL DRIVEWAY PERMITS TO BE APPROVED FROM THE TOWNSHIP AND NO DRIVEWAY SHALL BE LOCATED AT A STORMWATER INLET OR WITHIN ANY EASEMENT.
21. CLEAR SIGHT TRIANGLES SHALL BE KEPT CLEAR AND MAINTAINED FREE OF OBSTRUCTIONS TO VISION AND NO PERSON SHALL PLACE, PLANT, DEPOSIT OR PERMIT THE PLACEMENT, PLANTING OR DEPOSIT OF ANY MATERIAL, BRUSH, FENCE, TREE, SHRUB OR OTHER OBSTRUCTION, ALL STREET INTERSECTIONS CREATED BY THIS DEVELOPMENT SHALL PROVIDE A CLEAR SIGHT TRIANGLE MEASURED 75 FEET FROM THE POINT OF INTERSECTION OF THE CENTER LINES OF THE INTERSECTING STREETS, EXCEPT THAT, CLEAR SIGHT TRIANGLES OF 100 FEET SHALL BE PROVIDED FOR ALL INTERSECTIONS WITH ARTERIAL AND MAJOR (MAPLE ST.) STREETS. NO BUILDING, STRUCTURE, PLANTING OR OTHER OBSTRUCTION (OTHER THAN UTILITY POLES) HIGHER THAN 30" ABOVE THE ROADWAY GRADE AND BELOW 10' SHALL BE PERMITTED WITHIN THE CLEAR SIGHT TRIANGLE.
22. A MINIMUM 20' WIDE EASEMENT SHALL BE PROVIDED FOR WATERLINES PUBLIC STREET SYSTEM. A MINIMUM 30' WIDE EASEMENT SHALL BE PROVIDED FOR SANITARY SEWER PIPES OUTSIDE THE PUBLIC STREET SYSTEM. NO STRUCTURE OR BUILDINGS SHALL BE ERECTED WITHIN SUCH EASEMENTS.
23. THE GRADING OF ALL LOTS SHALL BE FOR GENERAL GRADING PURPOSES ONLY. ANY DEVIATION MUST ENSURE POSITIVE DRAINAGE FROM THE PROPOSED DWELLING. INDIVIDUAL LOT OWNERS ARE PROHIBITED FROM THE PLACEMENT OF ANY STRUCTURE, VEGETATION OR OTHER SURFACE WATER OBSTRUCTION IN ANY MANNER THAT WOULD IMPEDE OR REDIRECT STORM WATER DISCHARGING FROM THE LOTS INTO A PATTERN DIFFERING FROM THAT INDICATED ON THE GRADING PLANS.
24. NOTHING SHALL BE PLACED, PLANTED, SET OR PUT WITHIN AN AREA OF AN EASEMENT THAT WOULD ADVERSELY AFFECT THE FUNCTION OF THE EASEMENT.
25. ANY DRAINAGE AND UTILITY EASEMENTS SHOWN ON THE PLAN SHALL BE OWNED AND MAINTAINED IN ACCORDANCE WITH THE APPROVED PLAN AND SHALL BE REFERENCED WITHIN THE PROPERTY DEED.
26. ALL SIGNS SHALL BE IN ACCORDANCE WITH TITLE 67, CHAPTER 211, OFFICIAL TRAFFIC CONTROL DEVICES (PENNDOT PUB. 68).
27. IT SHALL BE THE RESPONSIBILITY OF THE DEVELOPER FOR THE INSTALLATION AND COST OF ALL STREET SIGNS.
28. REGULATORY STOP SIGNS SHALL BE PROVIDED AT APPROPRIATE INTERSECTIONS.
29. ALL PROPOSED STREETS SHALL BE POSTED WITH 25 MPH SPEED LIMIT SIGNS.
30. A HIGHWAY OCCUPANCY PERMIT IS REQUIRED PURSUANT TO SECTION 402 OF THE ACT OF JUNE 1, 1945 (P.L. 1242, NO. 428) KNOWN AS THE "STATE HIGHWAY LAW". BEFORE ACCESS TO A STATE HIGHWAY IS PERMITTED. ACCESS TO THE STATE HIGHWAY SHALL ONLY BE AS AUTHORIZED BY A HIGHWAY OCCUPANCY PERMIT. PLAN APPROVAL DOES NOT GUARANTEE THAT A PENNDOT PERMIT WILL BE ISSUED.
31. CORNER LOTS SHALL HAVE ONE REQUIRED FRONT YARD, ONE REQUIRED REAR YARD AND TWO REQUIRED SIDE YARDS (ALL REQUIRED YARDS BEING MEASURED FROM EITHER THE ROAD RIGHT-OF-WAY OR THE ADJACENT INTERIOR LOT LINE). THE YARD TOWARD WHICH THE FRONT ENTRANCE OF THE BUILDING FACES SHALL BE DESIGNATED AS THE FRONT YARD. THIS APPLIES TO LOTS 1, 11, 22, 29, 30 & 38. THERE ARE SETBACKS SHOWN THAT DICTATE A SIDE LOAD DRIVEWAY/GARAGE WITH THE FRONT ENTRY FOR THE HOME FROM THE OPPOSITE STREET AS THE DRIVEWAY.
32. IF ANY PROPOSED LOT CONTAINS ANY EASEMENT, BMP, ETC. IT SHALL BE NOTED IN THE DEED.
33. THE DRIVEWAY ON LOTS 11 & 12 CANNOT BE SHIFTED AWAY FROM THE INTERSECTION DUE TO THE SNOW STOCKPILE EASEMENT.
34. HIGHWAY OCCUPANCY PERMITS ARE REQUIRED PURSUANT TO SECTION 420 OF THE ACT OF JUNE 1, 1945 (P.L. 1242, NO. 428), KNOWN AS THE "STATE HIGHWAY LAW". PENNDOT HIGHWAY OCCUPANCY PERMITS WILL BE REQUIRED FOR EACH PROPOSED DRIVEWAY ACCESS.

FLOODPLAIN AND WETLAND NOTES

1. THERE ARE NO FLOOD ZONES ON THIS SITE ACCORDING TO THE NORTH LEBANON TOWNSHIP ZONING MAP AND FIRM PANEL NUMBER 42075C0257D, EFFECTIVE DATE: JUNE 5, 2012.
2. WETLANDS EXIST ON SITE PER A WETLAND STUDY PERFORMED BY VORTEX ENVIRONMENTAL, INC., DATED MAY 28, 2019.

STORMWATER NOTES

1. ALL STORMWATER MANAGEMENT FACILITIES AND BMPS SHOWN ON THIS PLAN SHALL BE CONSTRUCTED BY THE DEVELOPER IN ACCORDANCE WITH THE DESIGN, CONDITIONS AND SPECIFICATIONS IDENTIFIED ON THIS PLAN. OWNERSHIP AND MAINTENANCE SHALL BE THE RESPONSIBILITY OF THE LANDOWNER OR HOMEOWNER'S ASSOCIATION, HIS SUCCESSORS AND ASSIGNS, AS IDENTIFIED IN THE OPERATION AND MAINTENANCE SCHEDULE ON SHEET 30.
2. STORMWATER MANAGEMENT FACILITIES, INCLUDING ALL STORMWATER BMPS AND FURTHER INCLUDING PIPES, SWALES AND OTHER WATER CONVEYANCES, SHALL NOT BE MODIFIED, REMOVED, FILLED, LANDSCAPED OR OTHERWISE ALTERED WITHOUT APPROVAL BY THE TOWNSHIP ENGINEER.
3. AFTER STORM WATER MANAGEMENT FACILITIES INSTALLATION IS COMPLETED, CONTACT THE LEBANON COUNTY PLANNING DEPARTMENT (274-2801 EXT. 2325) FOR INSPECTION BY THE COUNTY ENGINEER.
4. NO OCCUPANCY PERMITTED UNTIL STORM WATER MANAGEMENT FACILITIES HAVE BEEN INSTALLED AND APPROVED THROUGH INSPECTION BY THE COUNTY ENGINEER.
5. NO PERSON SHALL MODIFY, REMOVE, FILL, LANDSCAPE, OR ALTER ANY STORMWATER MANAGEMENT BMPS, FACILITIES, AREAS, OR STRUCTURES WITHOUT THE WRITTEN APPROVAL OF NORTH LEBANON TOWNSHIP
6. TOWNSHIP AND COUNTY OFFICIALS AND THEIR AGENTS OR EMPLOYEES HAVE THE RIGHT OF ACCESS FOR INSPECTION, AND IN CASES OF CONSTRUCTION DEFAULT, CONSTRUCTION OF THE STORM WATER MANAGEMENT FACILITIES.
7. ALL STORM SEWERS SHALL BE CONSTRUCTED PER PENNDOT SPECIFICATIONS AS OUTLINED IN PUBLICATION 408, DESIGN MANUAL, PART 2, AND THE HIGHWAY DESIGN AND STANDARDS FOR ROADWAY CONSTRUCTION, RC-SERIES, UNLESS OTHERWISE APPROVED BY A WAIVER.
8. ROOF DRAINS SHALL BE DIRECTED AWAY FROM STRUCTURES TO PREVENT INFILTRATION NEAR THE STRUCTURE FOUNDATION. THE OUTLETS SHALL HAVE POSITIVE DRAINAGE AWAY FROM THE STRUCTURE.
9. RUNOFF FROM THE LOT IMPROVEMENTS SHALL BE DIRECTED TO THE STORM WATER MANAGEMENT FACILITIES AS SHOWN ON THE GRADING PLAN.
10. ALL INLETS SHALL BE PROVIDED WITH BICYCLE SAFE GRATES, UNLESS OTHERWISE SPECIFIED ON THIS PLAN.
11. ALL INLETS SHALL BE PROVIDED WITH TYPE C CONCRETE INLET TOPS WITH 2" SUMPS UNLESS OTHERWISE NOTED ON THE STORM PROFILES. THE TOP OF GRATE ELEVATIONS REFLECT THE 2" SUMP.
12. WATERTIGHT PIPE CONNECTIONS ARE REQUIRED ON ALL PROPOSED PIPES.
13. THE PROPOSED STORM SEWER PIPE LENGTHS ARE MEASURED FROM CENTER TO CENTER OF OF STRUCTURE, AND INCLUDE TOTAL LENGTH OF END SECTIONS, WHERE APPLICABLE. SANITARY SEWER PIPE LENGTHS ARE MEASURED FROM CENTER TO CENTER OF MANHOLES.
14. AS-BUILT PLANS OF ALL STORMWATER MANAGEMENT BMPS AND AN EXPLANATION OF ANY DISCREPANCIES WITH THE CONSTRUCTION PLANS SHALL BE SUBMITTED TO NORTH LEBANON TOWNSHIP WITHIN 30 CALENDAR DAYS OF PROJECT COMPLETION OR, IN THE CASE OF DEDICATED PUBLIC IMPROVEMENTS, PRIOR TO ACCEPTANCE OF THE IMPROVEMENTS BY THE TOWNSHIP. A PROFESSIONALLY SEALED AS-BUILT CONSTRUCTION REPORT, AND PLAN INCLUDING RELATIVE DATES, NAME(S) OF CONTRACTOR(S), METHODS OF CONSTRUCTION, AND VERIFICATION OF CONFORMANCE TO PLAN SPECIFICATIONS AND GOOD ENGINEERING PRACTICES SHALL BE PROVIDED TO THE LEBANON COUNTY PLANNING DEPARTMENT PRIOR TO BOND REDUCTION REQUESTS RELATED TO THE BASIN(S).
15. MINIMUM FLOOR ELEVATIONS FOR ALL STRUCTURES THAT WOULD BE AFFECTED BY A BASIN OR OPEN CONVEYANCE SYSTEM WHERE PONDING MAY OCCUR SHALL BE TWO (2) FEET ABOVE THE 100-YEAR WATER SURFACE ELEVATION. ALL BASEMENTS LESS THAN 2 FEET ABOVE THE CALCULATED 100-YEAR WATER SURFACE THAT MAY BE ADVERSELY AFFECTED BY OFF-STREET COLLECTION AND CONVEYANCE AREAS SHOULD BE FLOOD PROOFED. ALL HOMES SHOULD BE CONSTRUCTED WITH FOOTER/FOUNDATION DRAINS. SUMP PUMPS FROM LOTS 31-36 SHALL DISCHARGE INTO BASIN 1 OR ITS LEVEL SPREADER.
16. STORMWATER MANAGEMENT IS PROVIDED FOR 4,150 S.F. OF ON-LOT IMPERVIOUS COVER.
17. ALL STORMWATER STRUCTURES ARE THE RESPONSIBILITY OF THE PROPERTY OWNER WHEN LOCATED ON A PRIVATE PROPERTY. ACCESS TO BE PROVIDED TO THE TOWNSHIP FOR THE PURPOSE OF INSPECTION.
18. A PDF COPY OF THE APPROVED PCSM PLAN SHALL BE SUBMITTED TO THE TOWNSHIP.

UTILITY NOTES

A. SANITARY SEWER (MAINS ARE INTENDED FOR DEDICATION TO THE NORTH LEBANON TOWNSHIP MUNICIPAL AUTHORITY)

1. THE PROPOSED SANITARY SEWER SHALL BE CONNECTED TO THE PUBLIC SANITARY SEWER SYSTEM.
2. ALL PROPOSED SANITARY SEWER SHALL BE DESIGNED IN ACCORDANCE WITH THE NORTH LEBANON TOWNSHIP MUNICIPAL AUTHORITY, LEBANON COUNTY, CURRENT RULES AND REGULATIONS AND DEP REGULATIONS.
3. PROVIDE A MINIMUM COVER OF FOUR (4) FEET FOR SANITARY SEWER, MEASURED FROM THE FINISHED GRADE TO THE TOP OF THE PIPE.
4. PROVIDE A MINIMUM OF EIGHTEEN (18) INCHES VERTICAL CLEARANCE BETWEEN ALL SANITARY SEWER AND PROPOSED UTILITY LINES. PROVIDE A MINIMUM HORIZONTAL CLEARANCE OF TEN (10) FEET BETWEEN SANITARY SEWER AND WATER MAINS. PROVIDE A MINIMUM HORIZONTAL CLEARANCE OF FIVE (5) FEET BETWEEN THE SANITARY SEWER AND EXISTING AND PROPOSED UTILITY LINES AND STRUCTURES SUCH AS MANHOLES, INLETS, CURBS, ETC.
5. A PRE-CONSTRUCTION CONFERENCE SHALL BE HELD WITH NORTH LEBANON TOWNSHIP PRIOR TO CONSTRUCTION.
6. TESTING OF ALL SEWERS SHALL BE CONDUCTED IN THE PRESENCE OF NORTH LEBANON TOWNSHIP PERSONNEL AND IN ACCORDANCE WITH THE TOWNSHIP'S REQUIREMENTS.
7. UPON COMPLETION OF THE SANITARY SEWER INSTALLATION BY THE DEVELOPER, "AS CONSTRUCTED" DRAWINGS FOR THE SEWER LINE EXTENSION SHALL BE PROVIDED TO NORTH LEBANON TOWNSHIP.
8. EACH DWELLING SHALL BE SERVICED BY SEPARATE SANITARY SEWER SERVICE CONNECTIONS.
9. SOLID WASTE STORAGE AND DISPOSAL SHALL BE THE RESPONSIBILITY OF THE INDIVIDUAL LOT OWNER.
10. NO BUILDING PERMIT OR SEWAGE PERMIT WILL BE ISSUED UNTIL THE SEWAGE FACILITIES PLANNING MODULE HAS BEEN APPROVED BY THE DEPARTMENT OF ENVIRONMENTAL PROTECTION/LEBANON COUNTY.
11. CONSTRUCTION SHALL NOT PROCEED ON ANY SEWERAGE FACILITIES UNTIL APPROVAL IS GRANTED BY THE TOWNSHIP IN WRITING.
12. SHOP DRAWINGS SHALL BE SUBMITTED TO THE TOWNSHIP FOR REVIEW AND APPROVAL PRIOR TO CONSTRUCTION.
13. PRIOR TO THE START OF CONSTRUCTION, THE CONTRACTOR SHALL VERIFY THE LOCATION AND DEPTH OF ALL EXISTING SEWER FACILITIES TO WHICH CONNECTIONS WILL BE MADE. IF FACILITIES ARE LOCATED DIFFERENTLY THAN SHOWN ON THE PLANS, THE CONTRACTOR SHALL CONTACT THE TOWNSHIP BEFORE COMMENCING WORK.
14. THE CONTRACTOR SHALL BE RESPONSIBLE FOR MAINTAINING A COPY OF ALL PERMITS RELATED TO THE CONSTRUCTION SHOWN ON THESE PLANS ON THE JOB SITE AT ALL TIMES.
15. A STREET CUT PERMIT AND BONDING WILL BE REQUIRED FROM NORTH LEBANON TOWNSHIP FOR THE CONNECTION TO THE SANITARY SEWER.

RETAINING WALL NOTES

1. SEE SHEETS 12 & 13 FOR RETAINING WALL LOCATION AND GRADING.
2. SEE SHEETS 29A-29C FOR RETAINING WALL DETAILS.
3. SEE O & M SCHEDULE ON SHEET 30 (ITEM B.13) FOR LONG TERM MAINTENANCE REQUIREMENTS FOR RETAINING WALLS.

UTILITY NOTES CONTINUED

B. WATER LINE (MAINS ARE INTENDED FOR DEDICATION TO THE NORTH LEBANON TOWNSHIP MUNICIPAL AUTHORITY)
(DESIGNED IN ACCORDANCE WITH AND INSPECTED BY THE CITY OF LEBANON AUTHORITY, ALTHOUGH DEDICATED TO THE NORTH LEBANON TOWNSHIP MUNICIPAL AUTHORITY)
CONTACT INFORMATION FOR THE CITY OF LEBANON AUTHORITY
CITY OF LEBANON AUTHORITY, 2311 RIDGEVIEW ROAD, LEBANON, PA 17042
BOB SENTZ, BSENTZ@LEBANONAUTHORITY.ORG, 717-272-2841

1. WATER SYSTEMS SHALL BE CONSTRUCTED AND TESTED IN ACCORDANCE WITH THE CURRENT CITY OF LEBANON AUTHORITY'S "GENERAL SPECIFICATIONS FOR WATER SYSTEM CONSTRUCTION".
2. THE CONSTRUCTION OF WATER MAINS REQUIRES A WATER MAIN EXTENSION AGREEMENT BETWEEN THE DEVELOPER AND THE AUTHORITY.
3. EXISTING WATER MAINS ARE SHOWN AT AN APPROXIMATE LOCATION. THE CONTRACTOR SHALL EXCAVATE TEST PITS TO DETERMINE ACTUAL LOCATIONS AND VERIFY WATER MAIN SIZES AT UTILITY CROSSINGS, EXCAVATED AREAS, AND TIE-IN LOCATIONS.
4. WATER LATERAL CONNECTION REQUIRES AN APPLICATION AND PAYMENT FOR A CAPACITY FEE WITH BOTH THE NORTH LEBANON TOWNSHIP MUNICIPAL AUTHORITY AND THE CITY OF LEBANON AUTHORITY PRIOR TO MAKING THE WATER TAPS.
5. FIRE SERVICE CONNECTION REQUIRES AN APPLICATION AND PAYMENT FOR A CAPACITY FEE WITH THE AUTHORITY PRIOR TO MAKING THE TIRE LINE TAP.
6. ANY WORK WITHIN PENNDOT RIGHT-OF-WAY REQUIRES A PENNDOT HIGHWAY OCCUPANCY PERMIT (HOP). THE PERMIT TYPICALLY IS REQUIRED TO BE IN THE AUTHORITY'S NAME, AND THE AUTHORITY REQUIRES THE CONTRACTOR TO PROVIDE A REFUNDABLE DEPOSIT TO THE AUTHORITY UNTIL PENNDOT SIGNS OFF ON THE PERMIT AFTER CONSTRUCTION IS COMPLETE.
7. ANY WORK WITHIN MUNICIPAL RIGHT-OF-WAY'S MIGHT REQUIRE A MUNICIPAL PERMIT. THE PERMIT SHALL BE ACQUIRED IN THE CONTRACTOR'S NAME.
8. THE AUTHORITY SHALL APPROVE ALL MATERIALS PRIOR TO CONSTRUCTION.
9. A MANDATORY PRE-CONSTRUCTION MEETING SHALL BE HELD BETWEEN THE AUTHORITY, BUREAU OF WATER, AND WATERLINE CONSTRUCTION CONTRACTOR.
10. THE BUREAU OF WATER WILL INSPECT THE WATER MAIN INSTALLATION AND TESTING. THERE ARE FEES CHARGED TO THE DEVELOPER / CONTRACTOR FOR INSPECTION SERVICES. WATER MAIN CONSTRUCTION AND FEES SHALL BE COORDINATED WITH THE AUTHORITY.
11. THE PROPERTY OWNER / BUILDER SHALL INSTALL THE WATER TAP AND SERVICE LINE TO THE CURB STOP UNDER THE INSPECTION OF THE BUREAU OF WATER. THE PROPERTY OWNER IS RESPONSIBLE FOR THE WATER SERVICE AFTER THE CURB STOP. THE BUREAU OF WATER WILL INSTALL THE WATER METER WITHIN THE BUILDING OR AN APPROVED METER PIT AS INSTRUCTED BY THE BUREAU OF WATER. CONTACT THE BUREAU OF WATER METER DEPARTMENT FOR METER INSTALLATION, 2200 WEST CHESTNUT STREET, 717-273-2506.
12. WATER SERVICE LATERALS REQUIRE THE INSTALLATION OF A METER PIT WITHIN 5-FEET OF THE CURB STOP. METER PITS SHALL BE APPROVED BY THE METER DEPARTMENT PRIOR TO INSTALLATION.
13. PROVIDE A MINIMUM COVER OF FOUR (4) FEET FOR WATER LINES, MEASURED FROM THE FINISHED GRADE TO THE TOP OF THE PIPE.
14. A MINIMUM VERTICAL SEPARATION OF 18" SHALL BE MAINTAINED BETWEEN ALL WATER CROSSINGS.
15. PROVIDE A MINIMUM HORIZONTAL CLEARANCE OF TEN (10) FEET BETWEEN WATER AND SANITARY SEWER MAINS.
16. EACH DWELLING SHALL BE SERVICED BY SEPARATE WATER SERVICE CONNECTIONS.
17. WATER AND SEWER MAINS SHALL HAVE A MINIMUM OF AN 18-INCH SEPARATION, OR THE SEWER MAIN SHALL BE CONCRETE ENCASED IN THE AREA WHERE THE 18-INCH SEPARATION CANNOT BE MAINTAINED.
18. WATER MAINS AND LATERALS THAT ARE LESS THAN 18-INCHES FROM A STORM SEWER OR CULVERT SHALL BE INSULATED WITH A FOAM WRAP.
23. FIRE HYDRANTS AND THEIR LOCATIONS WILL BE SUBJECT TO APPROVAL BY THE CITY OF LEBANON AUTHORITY.
24. ALL FIRE HYDRANT LATERALS SHALL INCLUDE A 6" GATE VALVE.
25. TESTING OF ALL WATER MAINS SHALL BE CONDUCTED IN THE PRESENCE OF CITY OF LEBANON AUTHORITY PERSONNEL.
26. AT THE CONCLUSION OF THE INSTALLATION OF THE WATER SYSTEM AND SERVICE LINES, AND SUCCESSFUL TESTING THEREOF, THE WATER SYSTEM WILL BE OFFERED FOR DEDICATION TO THE NORTH LEBANON TOWNSHIP MUNICIPAL AUTHORITY.
27. UPON COMPLETION OF THE WATER LINE INSTALLATION BY THE DEVELOPER, "AS CONSTRUCTED" DRAWINGS FOR THE WATER LINE EXTENSION SHALL BE PROVIDED TO THE CITY OF LEBANON AUTHORITY.
28. THE INSTALLATION OF THE PUBLIC WATER FACILITIES WILL BE COMPLETED DURING THE APPROPRIATE PHASE OF THE DEVELOPMENT. REGARDING THE DEDICATION OF SUCH FACILITIES, IT IS THE DEVELOPER'S INTENTIONS TO DEDICATE THE PUBLIC WATER SYSTEM AS SOON AS PRACTICAL AFTER INSTALLATION.

C. OTHER UTILITIES

1. THE CONTRACTOR SHALL NOTIFY ALL APPROPRIATE UTILITIES AT LEAST 72 HOURS PRIOR TO THE START OF ANY CONSTRUCTION. ALL UTILITIES HAVE BEEN IDENTIFIED BASED ON THE BEST AVAILABLE INFORMATION AND LISTED ON THESE PLANS IN ACCORDANCE WITH ACT 187 REQUIREMENTS. THE CONTRACTOR SHALL VERIFY THE LOCATIONS OF EXISTING UTILITIES AND ALL EFFORTS SHALL BE UNDERTAKEN TO PROTECT EXISTING UTILITIES AND MAINTAIN UNINTERRUPTED SERVICE.
2. ANY DAMAGE TO UTILITIES BY THE CONTRACTOR SHALL BE REPAIRED IMMEDIATELY AT THE CONTRACTOR'S EXPENSE. RESTORATION OF ALL EXISTING SURFACE IMPROVEMENTS DAMAGED OR ALTERED DURING CONSTRUCTION, INCLUDING LANDSCAPING, SHALL ALSO BE THE RESPONSIBILITY OF THE CONTRACTOR.
3. ALL UTILITIES INCLUDING BUT NOT LIMITED TO TELEPHONE, CABLE, ELECTRIC, GAS, WATER AND SANITARY SEWER SHALL BE INSTALLED UNDERGROUND.
4. STREET LIGHTING LOCATION WILL BE COORDINATED WITH THE LOCAL UTILITY COMPANY. PROPOSED LIGHTING SHALL COMPLY WITH MET-ED SPECIFICATIONS.
5. THE LOCATIONS SHOWN ON THIS PLAN FOR STREET LIGHTING ARE PROPOSED AND SUBJECT TO CHANGE BY THE TOWNSHIP AND/OR MET-ED WHEN THE ACTUAL DESIGN PLAN IS SUBMITTED TO THE TOWNSHIP FOR AUTHORIZING MET-ED TO PROCEED.

RIGHT-OF-WAY IMPROVEMENTS AND OTHER RELATED SPECIFICATIONS (FROM NLT RESOLUTION NO. 10-2017)

1. SECTION 102 - ADDITIONAL STREET REGULATIONS:
   A. STREET NAMES SHALL NOT DUPLICATE OTHERS NEARBY & SHALL BE SUBJECT TO THE APPROVAL OF THE BOARD OF SUPERVISORS, LEBANON COUNTY EMA, LEBANON COUNTY GIS DEPARTMENT AND HARRISBURG/LEBANON POST OFFICE. STREET NAMES SHALL BE RESTRICTED TO 14 CHARACTERS FOR SIGNAGE PURPOSES. MAXIMUM STREET SIGN LENGTH IS 48".
   B. LOCAL STREETS REQUIRE A RIGHT-OF-WAY WIDTH OF 50' MINIMUM, A CARTWAY WIDTH OF 34' MINIMUM, VERTICAL GRADE ALIGNMENT OF 0.75% MINIMUM & 10% MAXIMUM, A HORIZONTAL CENTERLINE RADIUS OF 150' MINIMUM, A REVERSE CURVE TANGENT OF 50 MINIMUM & SIGHT DISTANCE OF 150' MINIMUM. THESE REQUIREMENTS ARE SUBJECT TO PENNDOT REGULATIONS.
   C. STREET INTERSECTIONS:
      I. STREETS SHALL INTERSECT AT RIGHT ANGLES & SHOULD BE AT RIGHT ANGLES FOR AT LEAST 100' FROM THE POINT OF CARTWAY INTERSECTION.
      II. NO MORE THAN 2 STREETS SHALL INTERSECT AT ANY ONE POINT.
      III. PROPOSED INTERSECTIONS ALONG ONE SIDE OF AN EXISTING STREET SHALL COINCIDE WITH ANY EXISTING INTERSECTIONS ON OPPOSITE SIDE OF THE STREET. WHERE INTERSECTIONS CANNOT BE PRACTICALLY CONNECTED, A MINIMUM OF 150' SHALL SEPARATE THE CENTERLINES OF OFFSET LOCAL STREETS.
      IV. STREET CURB INTERSECTIONS SHALL BE ROUNDED WITH A MINIMUM RADIUS OF 20' FOR LOCAL STREETS.
      V. INTERSECTIONS SHALL BE DESIGNED WITH A FLAT GRADE. IN HILLY OR ROLLING TOPOGRAPHY, A LEVELING AREA SHALL BE PROVIDED FOR SEVENTY-FIVE (75) FEET ON ALL SIDES PRECEDING THE INTERSECTION, MEASURING FROM THE EDGE OF CARTWAY OF THE INTERSECTION STREET. THE LEVELING AREA SHALL HAVE A MAXIMUM GRADE OF FOUR PERCENT (4%) FOR LOCAL AND CUL-DE-SAC STREETS AND A MAXIMUM GRADE OF TWO PERCENT (2%) FOR COLLECTOR AND MAJOR STREETS.
      VI. CLEAR SIGHT TRIANGLES OF SEVENTY-FIVE (75) FEET MEASURED ALONG THE CENTER LINE FROM THE POINT OF INTERSECTION, SHALL BE PROVIDED AND MAINTAINED AT ALL INTERSECTIONS. NO SIGN OR OTHER BUILDING, STRUCTURE, PLANTING OR OTHER OBSTRUCTION HIGHER THAN 30" ABOVE THE ROADWAY GRADE SHALL BE PERMITTED WITHIN THE CLEAR SITE TRIANGLE.
   D. SUBDIVISION ON UNIMPROVED (UNPAVED) STREETS OR RIGHT-OF-WAYS IS PROHIBITED
   E. DEDICATION AND ACCEPTANCE OF OWNERSHIP BY TOWNSHIP
      I. A LEGAL DESCRIPTION OF THE STREETS MUST BE PROVIDED TO THE TOWNSHIP FOR THE SOLICITOR TO PREPARE A DEED OF DEDICATION. THE LEGAL DESCRIPTION MUST MATCH THE RECORDED PLAN. ALL COSTS ASSOCIATED WITH THE DEED PREPARATION AND STREET DEDICATION ARE THE FINANCIAL RESPONSIBILITY OF THE DEVELOPER AND MUST BE PAID PRIOR TO ANY ACCEPTANCE BY THE BOARD OF SUPERVISORS.
      II. THE ENGINEER MUST PROVIDE A 8.5"x11" SEALED PLAN SHOWING THE STREET CENTERLINE LENGTH, RIGHT-OF-WAY WIDTH & CARTWAY WIDTH TO BE USED WITH THE TOWNSHIP'S RESOLUTION FOR ACCEPTING OWNERSHIP AND MAINTENANCE OF THE STREETS. A SEPARATE PLAN MUST BE PROVIDED FOR EACH STREET DEDICATED.
      III. THE ENGINEER MUST PROVIDE AS-BUILT DRAWINGS FOR ALL STORMWATER ASSOCIATED WITH THE DEVELOPMENT & A SEPARATE AS-BUILT DRAWING FOR THE STREET LIGHTS & ASSOCIATED APPURTENANCES. THIS MUST BE PROVIDED VIA 2 HARD COPIES AND A .DWG FILE.
      IV. THE DEVELOPER MUST PROVIDE AN 18-MONTH INTEGRITY BOND. THE AMOUNT OF THE BOND WILL BE DETERMINED BY THE TOWNSHIP & WILL BE IN THE AMOUNT OF 15% OF THE TOTAL COST OF THE STREET & ALL RELATED STREET IMPROVEMENTS.
      V. A FINAL INSPECTION REPORT FROM THE COUNTY ENGINEER SHOWING NO REMAINING DEFICIENCIES FOR THE STREET & RELATED IMPROVEMENTS, INCLUDING BUT NOT LIMITED TO SEWER, STORMWATER, STREET LIGHTS, CURBING, FIRE HYDRANT MARKERS, STORM DRAIN MARKINGS, ETC.
      VI. A FINAL INSPECTION REPORT FROM THE TOWNSHIP ROADMASTER, SHOWING NO REMAINING DEFICIENCIES FOR THE STREET AND RELATED IMPROVEMENTS, INCLUDING BUT NOT LIMITED TO SEWER, STORMWATER, STREET LIGHTS, CURBING, FIRE HYDRANT MARKERS, STORM DRAIN MARKINGS, SPEED LIMIT & STOP SIGNS, STREET NAME SIGNS, ADDITIONAL

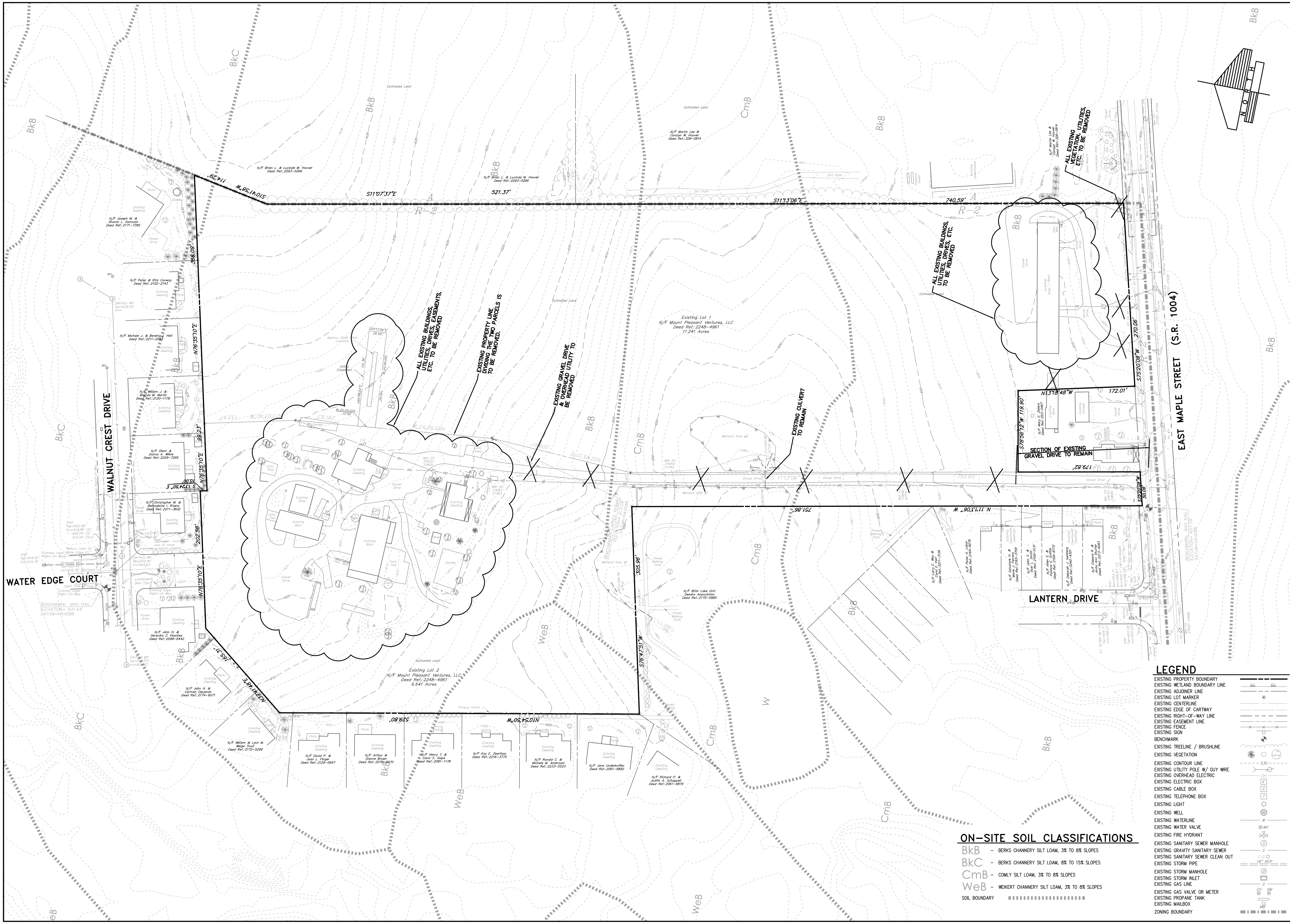

LEGEND

EXISTING PROPERTY BOUNDARY	
EXISTING WETLAND BOUNDARY LINE	
EXISTING ADJOINER LINE	
EXISTING LOT MARKER	
EXISTING CENTERLINE	
EXISTING EDGE OF CARTWAY	
EXISTING RIGHT-OF-WAY LINE	
EXISTING EASEMENT LINE	
EXISTING FENCE	
EXISTING SIGN	
BENCHMARK	
EXISTING TREELINE / BRUSHLINE	
EXISTING VEGETATION	
EXISTING CONTOUR LINE	530
EXISTING UTILITY POLE W/ GUY WIRE	
EXISTING OVERHEAD ELECTRIC	OH
EXISTING ELECTRIC BOX	E
EXISTING CABLE BOX	C
EXISTING TELEPHONE BOX	T
EXISTING LIGHT	
EXISTING WELL	W
EXISTING WATERLINE	W
EXISTING WATER VALVE	WV
EXISTING FIRE HYDRANT	
EXISTING SANITARY SEWER MANHOLE	S
EXISTING GRAVITY SANITARY SEWER	S
EXISTING SANITARY SEWER CLEAN OUT	C.O.
EXISTING STORM PIPE	18" RCP
EXISTING STORM MANHOLE	D
EXISTING STORM INLET	
EXISTING GAS LINE	G
EXISTING GAS VALVE OR METER	GV GM
EXISTING PROPANE TANK	
EXISTING MAILBOX	MB
ZONING BOUNDARY	

ON-SITE SOIL CLASSIFICATIONS

BkB	BERKS CHANNERY SILT LOAM, 3% TO 8% SLOPES
BkC	BERKS CHANNERY SILT LOAM, 8% TO 15% SLOPES
CmB	COMLY SILT LOAM, 3% TO 8% SLOPES
WeB	WEIKERT CHANNERY SILT LOAM, 3% TO 8% SLOPES
SOIL BOUNDARY	

NO.	DATE	REVISION
3	12-21-21	REVISED PER N. LEB. TWP., LEB. CNTY. ENG. & THE REVISED WALL DESIGN
2	9-29-21	REVISED PER SEWER AUTH., N. LEB. TWP., LEB. CNTY. ENG. & THE REVISED WALL DESIGN
1	6-18-21	REVISED PER LCCD, DEP, SEWER AUTH., N. LEB. TWP., & LCPD

FOR PIONEER MANAGEMENT BY:

MANAGER: JAMES C. HENKE		SURV. CHIEF:	FIELDBOOK NO.
DESIGN BY: JDB/KWG	CHKD BY: JDB/JCH	DRAWN BY: JDB/MLS	CHKD BY: JCH

DRAWING REFERENCE:
F:\18\18-2000-01\CAD\Final Plan\Existing Features.dwg

XREFS:
TB [F:\18\18-2000-01\CAD\Final Plan\X-Refs\TB.dwg]
HSI-SURVEYBASE [F:\18\18-2000-01\CAD\Final Plan\X-Refs\HSI-SurveyBase.dwg]
Lidar-Base [F:\18\18-2000-01\CAD\Final Plan\X-Refs\Lidar-Base.dwg]
P-Base [F:\18\18-2000-01\CAD\Final Plan\X-Refs\P-Base.dwg]
Street Alignments [F:\18\18-2000-01\CAD\Final Plan\C3D-Bases\Street Alignments.dwg]

CLIENT
MR. S. GERALD MUSSER
144 BELL ROAD
PALMYRA, PA 17078
(717) 821-1129

SCALE
1" = 60'
0 30' 60' 120' 180'

PIONEER Management, LLC
111 Millersville Road, Lancaster, PA 17603
Phone (717) 481-5500 · Fax (717) 481-4955
Email: jh@pioneermanagementllc.com
Website: www.pioneermanagementllc.com

EXISTING FEATURES AND DEMOLITION PLAN

FOR THE
FINAL SUBDIVISION AND LAND DEVELOPMENT PLAN OF
MAPLEDALE ESTATES

NORTH LEBANON TOWNSHIP LEBANON COUNTY, PA

DATE: FEB. 25, 2021

SHEET NO. 3 OF 36

DWG. NO. 18-2000-01-B

F:\18\18-2000-01\CAD\Final Plan\Existing Features.dwg, 3 EXISTING FEATURES AND DEMOLITION PLAN, 12/21/2021 1:45:40 PM, 1:1

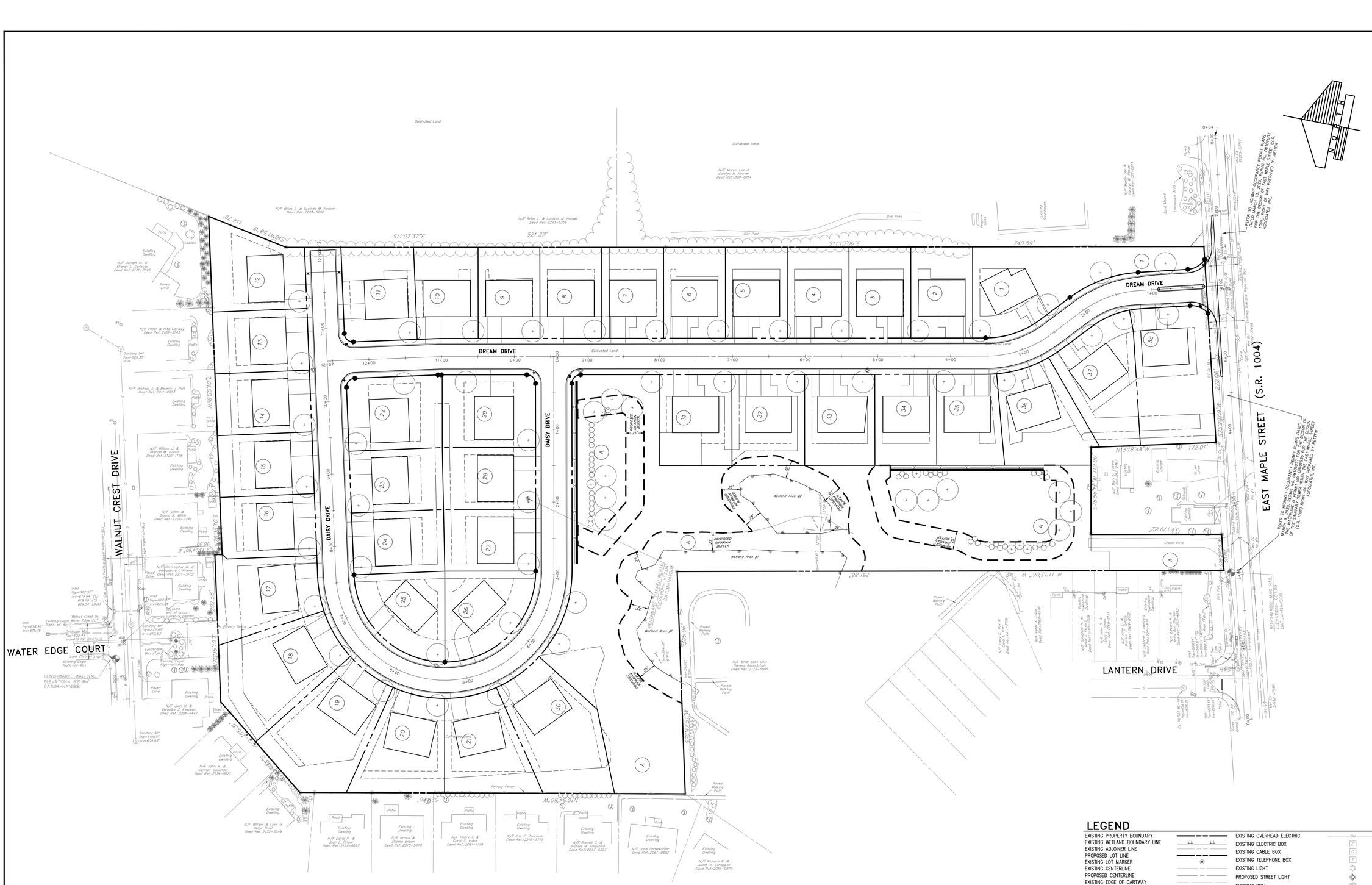
DREAM DRIVE
EAST MAPLE STREET (S.R. 1004)
WALNUT CREST DRIVE
DAISY DRIVE
WATER EDGE COURT
LANTERN DRIVE
Cultivated Land
N/F Brian L. & Lucinda M. Hoover Deed Ref.:2293-3266
N/F Martin Lee & Carolyn M. Hoover Deed Ref.:328-0814
S11°07'37"E 521.37'
S11°13'06"E 740.59'
N76°35'10"E 114.79'
N13°18'48"W 172.01'
S79°56'19"W 179.82'
N 11°13'06" W 751.86'
N 90°51'11" W 900.96'
S25°43'10"W 305.00'
N 05°49'01" W 208.55'
N 05°49'01" W 208.55'
S 05°49'01" E 208.55'
S 05°49'01" E 208.55

F:\18\18-2000-01\CAD\Final Plan\Layout.dwg, 5 LAYOUT PLAN, 12/2/2021 1:46:05 PM, 1:1

CENTERLINE LINE TABLE		
LINE #	LENGTH	BEARING
L306	117.46'	N14°39'51"W
L307	51.27'	N47°54'51"W
L308	593.85'	N11°10'50"W
L309	154.38'	N11°10'50"W
L310	151.27'	N13°24'52"W
L311	156.57'	S76°35'08"W
L312	295.04'	S76°35'08"W
L313	294.98'	N78°49'10"E
L314	748.24'	N11°10'50"W
L315	451.61'	N76°35'08"E

C.S.T AGREEMENT LINE TABLE		
LINE #	LENGTH	BEARING
CST-L316	26.66'	S59°39'51"E
CST-L317	19.99'	S75°20'09"W
CST-L318	18.89'	N11°13'06"W

CENTERLINE CURVE TABLE						
CURVE #	LENGTH	DELTA	RADIUS	TANGENT	BEARING	CHORD
C594	87.05'	33°15'00"	150.00'	44.79'	N31°17'21"W	85.83'
C595	96.17'	36°44'01"	150.00'	49.80'	S29°32'50"E	94.53'
C596	5.85'	2°14'02"	150.00'	2.92'	N12°17'51"W	5.85'
C597	465.39'	177°45'58"	150.00'	7693.19'	S12°17'51"E	299.94'

LOT CURVE TABLE						
CURVE #	LENGTH	DELTA	RADIUS	TANGENT	BEARING	CHORD
C38	73.09'	23°55'49"	175.00'	37.09'	S46°57'39"E	72.56'
C38A	129.06'	42°15'16"	175.00'	67.62'	S80°03'12"E	126.15'
C564	101.56'	33°15'00"	175.00'	52.25'	N31°17'21"W	100.14'
C565	80.14'	36°44'01"	125.00'	41.50'	S29°32'50"E	78.77'
C566	6.82'	2°14'02"	175.00'	3.41'	N12°17'51"W	6.82'
C567	48.44'	15°51'35"	175.00'	24.38'	S68°39'20"W	48.29'
C568	73.09'	23°55'49"	175.00'	37.09'	S48°45'38"W	72.56'
C569	73.09'	23°55'49"	175.00'	37.09'	S24°49'48"W	72.56'
C570	73.09'	23°55'49"	175.00'	37.09'	S0°53'59"W	72.56'
C571	73.09'	23°55'49"	175.00'	37.09'	S23°01'50"E	72.56'
C574	196.35'	90°00'00"	125.00'	125.00'	S56°10'50"E	176.78'
C575	191.48'	87°45'58"	125.00'	120.22'	S32°42'09"W	173.30'
C576	57.31'	26°16'16"	125.00'	29.17'	S34°46'43"E	56.81'
C583	9.42'	45°00'00"	12.00'	4.97'	N56°19'10"E	9.18'
C584	18.85'	89°59'59"	12.00'	12.00'	S56°10'49"E	16.97'
C585	18.85'	90°00'00"	12.00'	12.00'	S58°24'52"E	16.97'
C586	18.85'	90°00'00"	12.00'	12.00'	S31°35'08"W	16.97'
C587	27.82'	53°07'48"	30.00'	15.00'	N11°54'03"E	26.83'
C588	27.82'	53°07'48"	30.00'	15.00'	N41°13'45"W	26.83'
C589	75.55'	24°44'11"	175.00'	38.37'	S28°30'40"E	74.97'
C590	15.16'	4°57'44"	175.00'	7.58'	S13°39'42"E	15.15'
C593	4.87'	2°14'02"	125.00'	2.44'	N12°17'51"W	4.87'
C598	21.49'	7°02'05"	175.00'	10.76'	N44°23'48"W	21.47'
C599	15.23'	6°58'44"	125.00'	7.62'	S18°09'13"E	15.22'

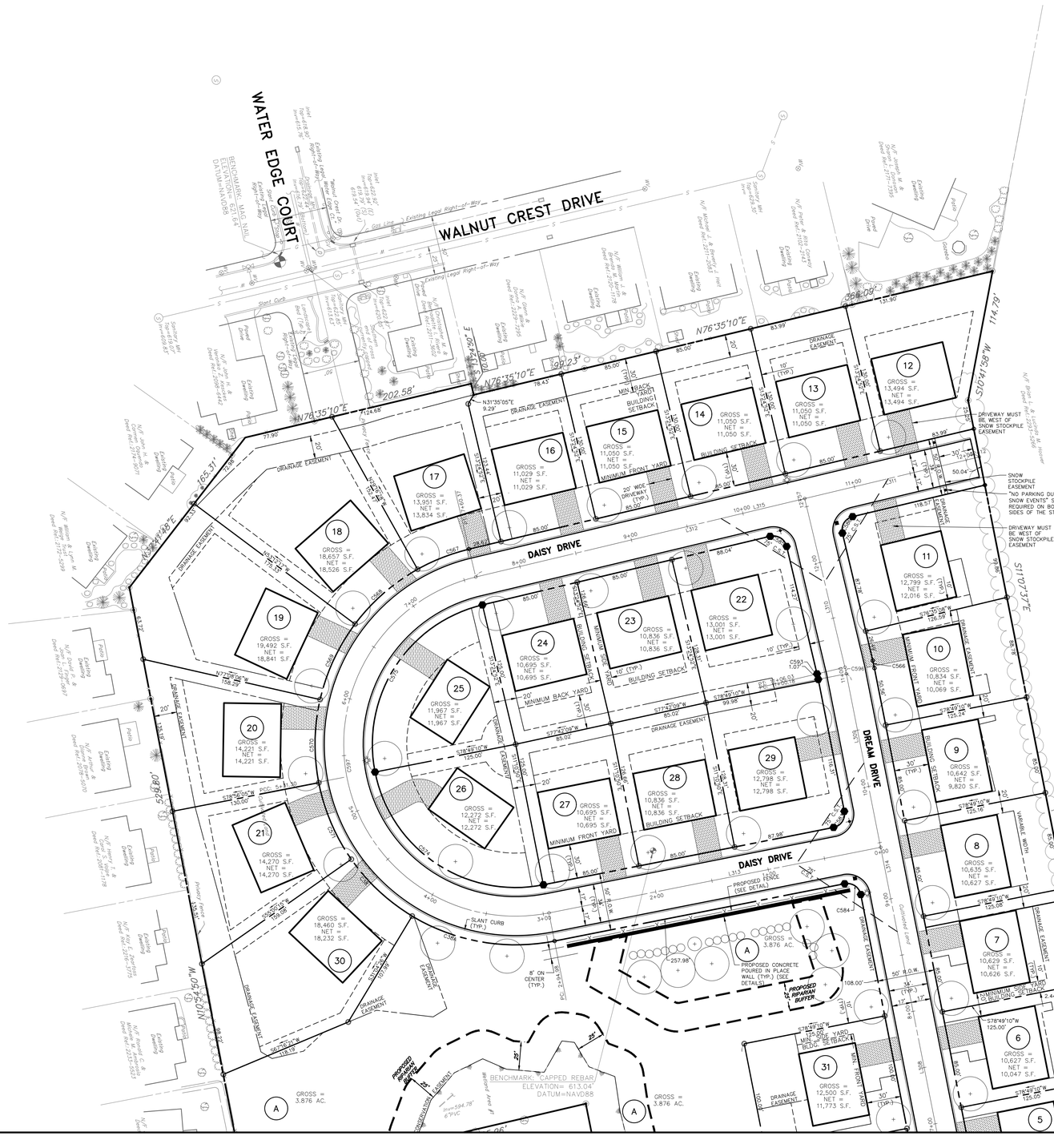
WATER EDGE COURT
WALNUT CREST DRIVE
DAISY DRIVE
DREAM DRIVE
DAISY DRIVE
BENCHMARK: MAG NAIL
ELEVATION= 621.64
DATUM=NAVD88
BENCHMARK: CAPPED REBAR
ELEVATION= 613.04
DATUM=NAVD88
N76°35'10"E 202.58'
N76°35'10"E 199.23'
N76°35'10"E 364.09'
S10°41'58"W 114.79'
S11°07'37"E 521.37'
N10°55'50"W 628.20'
N76°35'10"E 165.31'
N76°35'10"E 124.68'
N31°35'05"E 9.29'
N76°35'10"E 78.43'
N76°35'10"E 83.99'
S78°49'10"W 125.00'
S78°49'10"W 125.24'
S78°49'10"W 125.16'
S78°49'10"W 125.06'
S78°49'10"W 125.00'
S78°49'10"W 125.05'
S77°42'08"W 85.02'
S77°42'08"W 85.00'
S77°42'08"W 85.00'
S77°42'08"W 85.00'
S77°42'08"W 158.59'
S78°49'10"W 99.98'
S78°49'10"W 125.00'
S78°49'10"W 130.00'
S78°49'10"W 125.00'
S78°49'10"W 125.00'
S78°49'10"W 125.00'
S78°49'10"W 125.00'
S50°41'10"W 108.00'
S50°41'10"W 118.15'
S50°41'10"W 10.99'
S50°41'10"W 2.44'
S50°41'10"W 50.04'
S50°41'10"W 257.98'
S50°41'10"W 254.34'
S50°41'10"W 254.34'
S50°41'10"W 254.34

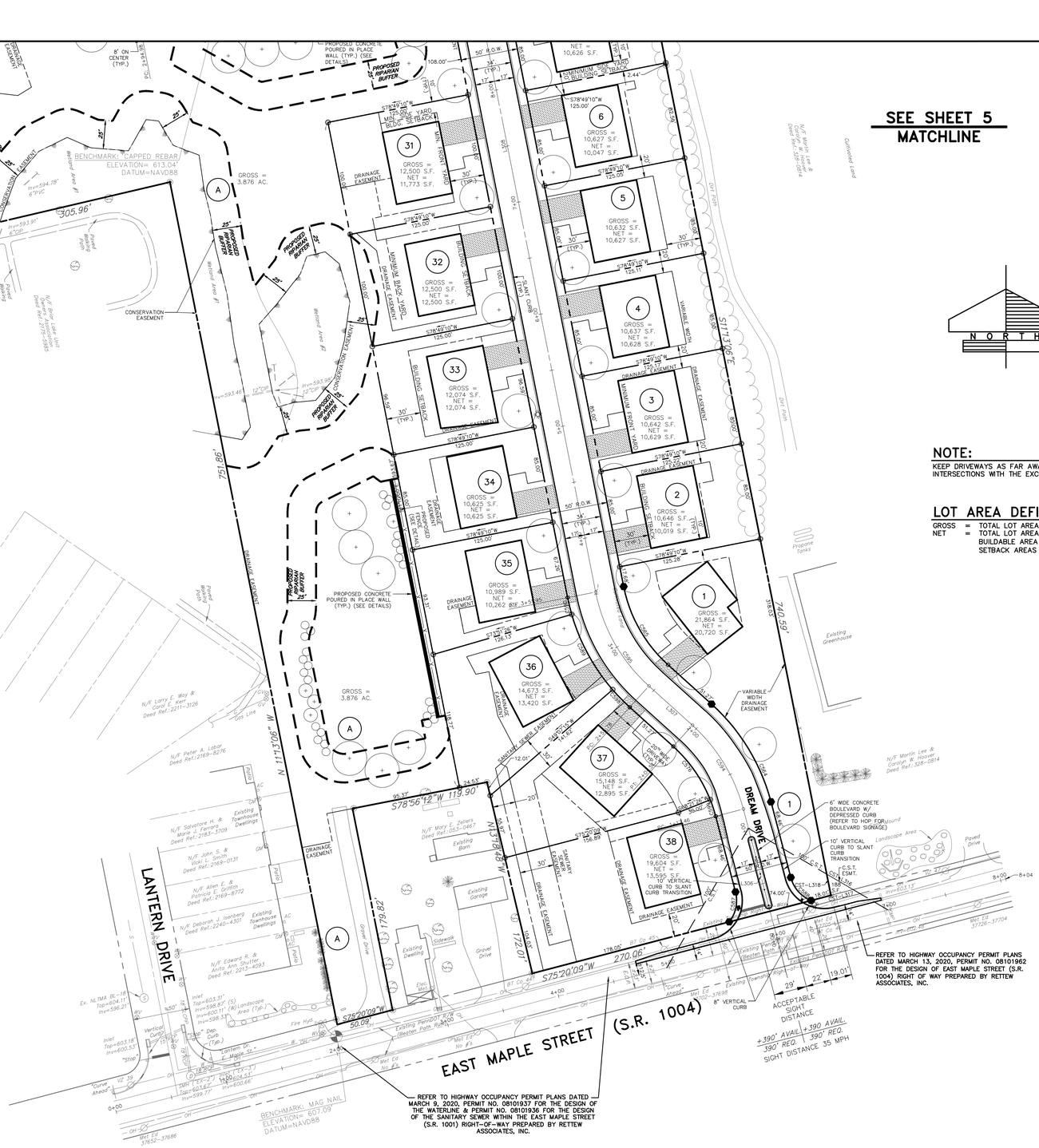
SEE SHEET 5
MATCHLINE
NOTE:
KEEP DRIVEWAYS AS FAR AWAY AS POSSIBLE FROM INTERSECTIONS WITH THE EXCEPTION OF LOT 11.
LOT AREA DEFINTION
GROSS = TOTAL LOT AREA
NET = TOTAL LOT AREA EXCLUDING ANY EASEMENTS WITHIN THE BUILDABLE AREA OF THE LOT (EASEMENTS WITHIN BUILDING SETBACK AREAS ARE INCLUDED IN THIS CALCULATION)
N O R T H
EAST MAPLE STREET (S.R. 1004)
DREAM DRIVE
LANTERN DRIVE
BENCHMARK CAPPED REBAR
ELEVATION= 613.04'
DATUM=NAVD88
BENCHMARK: MAG NAIL
ELEVATION= 607.09'
DATUM=NAVD88
CONSERVATION EASEMENT
DRAINAGE EASEMENT
PROPOSED RIPARIAN BUFFER
PROPOSED CONCRETE POURED IN PLACE WALL (TYP.) SEE DETAILS
REFER TO HIGHWAY OCCUPANCY PERMIT PLANS DATED MARCH 9, 2020, PERMIT NO. 08101937 FOR THE DESIGN OF THE WATERLINE & PERMIT NO. 08101936 FOR THE DESIGN OF THE SANITARY SEWER WITHIN THE EAST MAPLE STREET (S.R. 1001) RIGHT-OF-WAY PREPARED BY RETTEW ASSOCIATES, INC.
REFER TO HIGHWAY OCCUPANCY PERMIT PLANS DATED MARCH 13, 2020, PERMIT NO. 08101962 FOR THE DESIGN OF EAST MAPLE STREET (S.R. 1004) RIGHT OF WAY PREPARED BY RETTEW ASSOCIATES, INC.
ACCEPTABLE SIGHT DISTANCE
+390' AVAIL. / 390' REQ.
SIGHT DISTANCE 35 MPH
VARIABLE WIDTH DRAINAGE EASEMENT
6" WIDE CONCRETE BOULEVARD W/ DEPRESSED CURB (REFER TO HOP FOR BOULEVARD SIGNAGE)
10' VERTICAL CURB TO SLANT CURB TRANSITION
GROSS = 3.876 AC.
S78°56'12"W 119.90'
N 11°12'06" W 824.13'
S 11°13'06" E 751.66'
S26°47'51"W 305.96'
S 26°20'09" W 175.82'
S75°20'09"W 270.06'
N 63°52'51" W 594.25'
S 11°12'06" E 740.59'
S78°49'10"W 125.00'
S78°49'10"W 125.26'
S78°49'10"W 125.15'
S75°20'09"E 50.09'
S75°20'09"E 156.89'
S71°20'09"E 156.89'
S71°20'09"E 156.89'
S71

F:\18\18-2000-01\CAD\Final Plan\Easement.dwg, T:\EASEMENT PLAN, 12/21/2021 1:46:34 PM, 1:1

EASEMENT DESCRIPTION LEGEND

- PROPOSED DRAINAGE EASEMENT
- PROPOSED SANITARY SEWER EASEMENT INTENDED FOR DEDICATION TO THE MUNICIPAL AUTHORITY OF NORTH LEBANON
- PROPOSED SNOW STOCKPILE EASEMENT
- PROPOSED CLEAR SIGHT TRIANGLE ENCROACHMENT EASEMENT
- PROPOSED CONSERVATION EASEMENT

NOTE: SEE SHEET 9 FOR LINE AND CURVE CHARTS

N O R T H

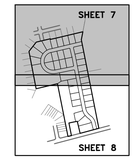

KEY MAP
SCALE: 1"=1000'

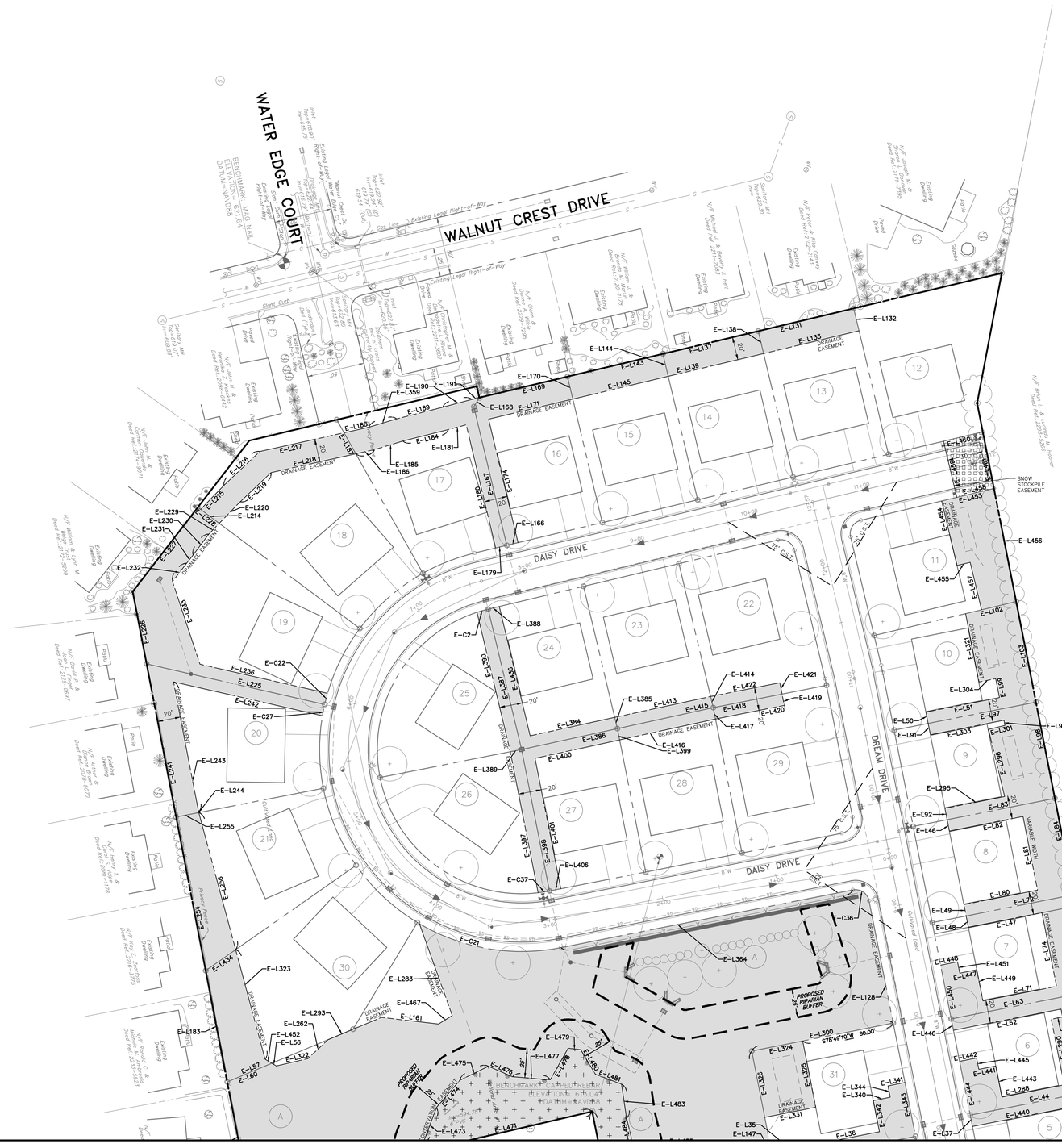
WATER EDGE COURT
WALNUT CREST DRIVE
DAISY DRIVE
DREAM DRIVE
DAISY DRIVE
BENCHMARK: MAG NAIL ELEVATION= 621.64 DATUM=NAVD88
BENCHMARK: CAP SET REBAR ELEVATION= 619.08 DATUM=NAVD88
PROPOSED RETENTION BASIN
PROPOSED RETENTION BASIN
PROPOSED RETENTION BASIN

F:\18\18-2000-01\CAD\Final Plan\Easement.dwg, E EASEMENT PLAN, 12/21/2021 1:46:38 PM, 1:1


SEE SHEET 7
MATCHLINE
PROPOSED 15' RIPARIAN BUFFER
PROPOSED REAR YARD BUILDING SETBACK
CONSERVATION EASEMENT
DRAINAGE EASEMENT
BENCHMARK: CAPPED REBAR
ELEVATION: 619.04
DATUM=NAVD88
N/F Lorry E. Way & Carol E. Kerr Deed Ref.:2211-3126
N/F Peter A. Labor Deed Ref.:2169-8276
N/F Salvatore H. & Marie J. Tiernan Deed Ref.:2185-3709
N/F John G. & Vicki L. Smith Deed Ref.:2169-0131
N/F Allen E. & Patricia E. Griffin Deed Ref.:2169-8772
N/F Deborah J. Isenberg Deed Ref.:2240-4301
N/F Edward R. & Anita Ann Shutter Deed Ref.:2213-4093
N/F Mary E. Zelieni Deed Ref.:053-0467
N/F Martin Lee & Carolyn W. Hoover Deed Ref.:328-0814
LANTERN DRIVE
DREAM DRIVE
EAST MAPLE STREET (S.R. 1004)
ACCEPTABLE SIGHT DISTANCE
+390' AVAIL. +390' REQ.
390' REQ.
SIGHT DISTANCE 35 MPH
BENCHMARK: MAG NAIL
ELEVATION= 607.09
DATUM=NAVD88
Existing Greenhouse
Existing Dwelling
Existing Garage
Existing Barn
Gravel Drive
Paved Drive
Sand Mound
Landscape Area
Existing Propane Tanks
Existing Townhouse Dwellings
Existing Single Family Dwelling
Existing Duplex Dwelling
Existing Gazebo
Existing Shed
Existing Pool
Existing Deck
Existing Patio
Existing Pavilion
Existing Pergola
Existing Fence
Existing Stone Wall
Existing Overhead Electric
Existing Gas Line
Existing Gas Valve
Existing Telephone Box
Existing Electric Box
Existing Cable Box
Existing Water Valve
Existing Fire Hydrant
Existing Sanitary Manhole
Existing Storm Manhole
Existing Storm Inlet
Existing Storm Pipe
Existing Contour
Existing Spot Elevation
Existing Edge of Cartway
Existing Right-of-Way Line
Existing Property Line
Existing Easement Line
Existing Centerline
Existing Curb
Existing Sidewalk
Existing Concrete Apron
Existing Handicap Ramp
Existing Crosswalk
Existing Stop Bar
Existing Stop Sign
Existing Street Light
Existing Utility Pole
Existing Guy Wire
Existing Mailbox
Existing Bollard
Existing Signal Pole
Existing Signal Box
Existing Signal Head
Existing Traffic Control Box
Existing Traffic Loop
Existing Traffic Signal Pedestrian Push Button
Existing Traffic Signal Pedestrian Signal Head
Existing Traffic Signal Vehicular Signal Head

EASEMENT LINE TABLE

LINE #	LENGTH	BEARING
E-L1	75.32'	S47°54'48"E
E-L2	50.85'	S75°20'09"W
E-L3	69.59'	N51°49'44"E
E-L4	37.07'	N47°54'51"W
E-L5	58.99'	N13°18'48"W
E-L6	65.33'	N78°49'10"E
E-L7	318.03'	S11°13'06"E
E-L8	82.28'	N78°49'10"E
E-L9	9.09'	N49°07'15"E
E-L10	62.24'	N11°10'50"W
E-L11	10.00'	N11°10'50"W
E-L12	95.00'	N78°49'10"E
E-L13	103.00'	S78°49'10"W
E-L14	48.00'	N11°10'05"W
E-L15	77.10'	S73°51'26"W
E-L16	17.00'	N11°10'52"W
E-L17	125.22'	S78°49'10"W
E-L18	85.00'	S11°13'06"E
E-L19	23.49'	N49°31'54"W
E-L20	71.58'	N11°10'50"W
E-L21	75.00'	N78°49'10"E
E-L22	100.00'	N11°10'50"W
E-L23	10.00'	N11°10'50"W
E-L24	10.00'	N11°10'50"W
E-L25	47.50'	N11°10'50"W
E-L26	125.17'	N78°49'10"E
E-L27	85.00'	S11°13'06"E
E-L28	65.00'	N11°10'52"W
E-L29	65.00'	S78°49'10"W
E-L30	103.00'	N78°49'10"E
E-L31	10.00'	S11°10'50"E
E-L32	10.00'	N11°10'50"W
E-L33	65.00'	S78°49'10"W
E-L34	47.50'	S11°10'50"E
E-L35	10.00'	N11°10'50"W
E-L36	73.00'	N78°49'10"E
E-L37	10.00'	N11°10'50"W
E-L39	65.00'	S78°49'10"W
E-L40	65.00'	S11°10'52"E
E-L41	125.11'	S78°49'10"W
E-L42	85.00'	N11°13'06"W
E-L43	65.00'	S11°10'52"E
E-L44	125.05'	S78°49'10"W
E-L45	85.00'	N11°13'06"W
E-L46	10.00'	N11°10'50"W
E-L47	65.00'	S78°49'10"W
E-L48	10.00'	N11°10'50"W
E-L49	10.00'	N11°10'50"W
E-L50	10.00'	N11°10'50"W
E-L51	65.00'	N78°49'10"E
E-L53	17.66'	S49°07'15"W
E-L54	118.37'	S78°54'24"W
E-L55	118.77'	S11°10'49"E
E-L62	95.00'	S78°49'10"W
E-L63	125.00'	N78°49'10"E
E-L64	82.56'	S11°13'06"E
E-L71	65.00'	N78°49'10"E
E-L72	95.08'	N78°49'10"E
E-L73	85.00'	S11°07'37"E
E-L74	65.00'	N11°10'52"W
E-L80	65.00'	S78°49'10"W
E-L81	65.00'	S11°10'52"E
E-L82	65.00'	N78°49'10"E
E-L83	95.16'	S78°49'10"W
E-L84	85.00'	N11°07'37"W
E-L91	10.00'	N11°10'50"W
E-L92	10.00'	N11°10'50"W
E-L96	4.59'	N11°10'52"W
E-L97	95.24'	N78°49'10"E
E-L98	85.00'	S11°07'37"E
E-L99	16.70'	N11°10'52"W
E-L102	45.09'	N76°35'08"E
E-L103	88.78'	S11°07'37"E
E-L104	2.44'	S11°07'37"E
E-L127	305.96'	N76°47'51"E
E-L128	108.00'	N11°10'50"W
E-L131	85.00'	S76°35'08"W
E-L132	20.00'	N13°24'52"W
E-L133	85.00'	N76°35'10"E
E-L137	85.00'	N76°35'08"E
E-L138	20.00'	S13°24'52"E
E-L139	85.00'	S76°35'10"W
E-L141	85.00'	N11°10'50"W
E-L143	64.20'	N76°35'22"E
E-L144	20.00'	S13°24'52"E
E-L145	85.00'	S76°35'10"W
E-L147	5.43'	S78°49'10"W
E-L161	49.89'	S83°21'57"E
E-L166	10.00'	N76°35'08"E
E-L167	123.44'	S13°24'52"E
E-L168	9.29'	S31°35'05"W
E-L169	78.43'	S76°35'10"W
E-L170	20.00'	N13°24'52"W
E-L171	75.00'	N76°35'10"E
E-L174	110.01'	N13°24'52"W
E-L179	10.00'	S76°35'08"W
E-L180	109.73'	N13°24'52"W
E-L181	15.99'	S75°01'26"W
E-L183	98.22'	N10°54'50"W
E-L184	40.87'	S75°49'56"W

EASEMENT LINE TABLE

LINE #	LENGTH	BEARING
E-L185	25.40'	S73°12'15"W
E-L186	16.68'	S77°26'41"W
E-L187	20.88'	N29°16'28"W
E-L188	21.95'	N77°26'41"E
E-L189	41.18'	N75°49'56"E
E-L190	26.21'	N75°01'26"E
E-L191	6.75'	N76°35'10"E
E-L214	20.16'	N53°12'17"W
E-L215	28.94'	N44°07'45"E
E-L216	42.81'	N46°41'18"E
E-L217	74.77'	N77°26'41"E
E-L218	75.28'	S77°26'41"W
E-L219	36.86'	S46°41'18"W
E-L220	25.92'	S44°07'45"W
E-L225	158.29'	N77°08'06"W
E-L226	63.72'	N10°54'50"W
E-L227	92.33'	N37°41'48"E
E-L228	23.20'	S53°12'17"E
E-L229	13.07'	S44°07'45"W
E-L230	22.61'	S36°50'23"W
E-L231	9.07'	S38°10'30"W
E-L232	19.96'	S37°41'48"W
E-L233	75.45'	S18°20'02"E
E-L236	113.44'	S77°08'06"E
E-L240	65.00'	S11°10'50"E
E-L241	134.93'	N10°54'50"W
E-L242	132.32'	S77°08'06"E
E-L243	114.83'	S10°54'50"E
E-L244	0.58'	N15°03'31"W
E-L245	37.00'	S14°39'51"E
E-L254	135.51'	N10°54'50"W
E-L255	20.04'	N78°56'05"E
E-L256	122.96'	S15°03'31"E
E-L262	23.81'	N46°49'23"E
E-L264	18.01'	S75°20'09"W
E-L268	15.00'	S75°20'09"W
E-L269	68.46'	N14°39'51"W
E-L270	15.00'	S75°20'09"W
E-L271	25.00'	S11°13'06"E
E-L272	27.00'	N78°46'54"E
E-L273	10.00'	S14°39'51"E
E-L274	12.71'	N78°49'55"E
E-L275	15.00'	S78°49'10"W
E-L276	65.00'	N78°49'10"E
E-L277	10.00'	N11°10'50"W
E-L278	15.00'	S78°49'10"W
E-L279	27.50'	N11°10'50"W
E-L280	27.50'	S11°10'50"E
E-L281	47.50'	S11°10'51"E
E-L282	125.00'	S78°49'10"W
E-L283	84.47'	N19°42'42"W
E-L284	47.50'	S11°10'48"E
E-L285	15.00'	S78°49'10"W
E-L286	10.00'	S11°10'50"E
E-L287	15.00'	S78°49'10"W
E-L288	55.00'	N78°49'10"E
E-L289	65.00'	S78°49'10"W
E-L290	58.00'	N11°10'50"W
E-L292	10.00'	N78°49'10"E
E-L293	50.12'	N67°16'21"E
E-L294	7.00'	N11°10'52"W
E-L295	52.79'	S78°49'10"W
E-L296	59.85'	N13°33'29"W
E-L297	593.67'	S11°10'50"E
E-L298	24.53'	S78°56'12"W
E-L299	594.03'	N11°13'06"W
E-L300	125.00'	N78°49'10"E
E-L301	14.71'	N76°26'31"E
E-L302	10.00'	N11°10'50"W
E-L303	65.00'	N78°49'10"E
E-L304	14.75'	S78°49'55"W
E-L305	96.59'	S11°10'51"E
E-L319	95.00'	N78°49'10"E
E-L320	76.59'	N11°10'48"W
E-L321	60.32'	N11°10'05"W
E-L322	28.13'	N76°49'25"E
E-L323	98.29'	S15°03'31"E
E-L324	39.25'	N78°49'13"E
E-L325	58.50'	S11°10'47"E
E-L326	58.50'	S11°10'47"E
E-L327	6.15'	S61°00'22"E
E-L328	10.41'	S13°18'48"E
E-L329	22.56'	S49°07'15"W
E-L330	12.01'	N13°18'48"W
E-L331	45.00'	N78°49'13"E
E-L332	130.34'	N49°07'15"E
E-L333	16.92'	S13°18'48"E
E-L334	123.15'	S49°07'15"W
E-L335	104.97'	S49°07'15"W
E-L336	58.99'	N13°18'48"W
E-L337	30.01'	N75°20'09"E
E-L338	60.96'	N13°18'48"W
E-L339	103.00'	N78°49'10"E
E-L340	15.00'	N78°49'10"E
E-L341	15.00'	N78°49'28"E
E-L342	27.50'	N11°10'50"W
E-L343	47.50'	N11°10'50"W
E-L344	10.00'	N11°10'50"W
E-L345	10.00'	S11°10'50"E
E-L346	43.00'	S14°39'51"E

EASEMENT LINE TABLE

LINE #	LENGTH	BEARING
E-L347	178.05'	S75°20'09"W
E-L348	104.03'	N13°18'48"W
E-L349	20.01'	S75°20'09"W
E-L350	84.02'	S13°18'48"E
E-L351	20.01'	N75°20'09"E
E-L352	84.02'	N13°18'48"W
E-L353	52.57'	N75°20'09"E
E-L354	84.00'	S14°39'48"E
E-L355	65.01'	N75°20'09"E
E-L356	125.00'	N78°49'10"E
E-L357	15.00'	N78°49'10"E
E-L358	15.00'	N78°49'28"E
E-L359	25.12'	N73°12'15"E
E-L360	65.94'	S13°18'48"E
E-L361	55.97'	N13°18'48"W
E-L362	27.50'	N11°10'50"W
E-L363	47.50'	N11°10'50"W
E-L364	257.98'	S78°49'10"W
E-L365	104.03'	N13°18'48"W
E-L366	104.03'	S13°18'48"E
E-L367	10.00'	N11°10'50"W
E-L368	95.00'	N78°49'10"E
E-L369	15.00'	N78°49'10"E
E-L370	15.00'	N78°48'52"E
E-L371	27.50'	S11°10'51"E
E-L372	47.50'	S11°10'50"E
E-L373	10.00'	S11°10'50"E
E-L374	15.00'	N78°49'10"E
E-L375	15.00'	N78°49'10"E
E-L376	10.00'	N11°10'50"W
E-L377	27.50'	S11°10'50"E
E-L378	15.00'	N78°49'10"E
E-L379	15.00'	N78°49'10"E
E-L380	10.00'	S11°10'50"E
E-L381	27.50'	N11°10'50"W
E-L382	125.00'	N78°49'10"E
E-L383	48.50'	S11°10'47"E
E-L384	75.01'	N77°42'09"E
E-L385	10.00'	S13°24'52"E
E-L386	85.02'	S77°42'09"W
E-L387	125.00'	N13°24'52"W
E-L388	10.00'	N76°35'08"E
E-L389	10.00'	S78°49'10"W
E-L390	124.21'	N13°25'05"W
E-L391	93.31'	S11°10'49"E
E-L392	15.00'	N78°49'10"E
E-L393	11.79'	N78°49'10"E
E-L394	39.46'	S11°10'50"E
E-L395	15.00'	N62°11'13"E
E-L396	34.33'	N27°48'40"W
E-L397	124.60'	N11°10'50"W
E-L398	125.00'	S11°10'50"E
E-L399	10.00'	N11°10'50"W
E-L400	75.01'	N77°42'09"E
E-L401	115.19'	N11°10'50"W
E-L402	15.01'	N62°11'13"E
E-L403	68.88'	N73°51'26"E
E-L404	15.00'	N42°05'09"E
E-L405	15.00'	N42°05'09"E
E-L406	10.00'	N78°49'10"E
E-L407	30.00'	N68°21'26"E
E-L408	24.48'	S47°54'51"E
E-L409	34.48'	S47°54'51"E
E-L410	7.68'	S11°10'50"E
E-L411	17.68'	N11°10'50"W
E-L412	15.04'	S51°49'20"W
E-L413	85.02'	S77°42'09"W
E-L414	10.00'	N13°24'52"W
E-L415	85.02'	N77°42'09"E
E-L416	85.02'	S77°42'09"W
E-L417	10.00'	S11°10'50"E
E-L418	60.74'	S78°49'10"W
E-L419	10.00'	S11°10'50"E
E-L420	60.65'	S78°49'10"W
E-L421	10.00'	S11°10'50"E
E-L422	60.84'	N78°49'10"E
E-L424	15.00'	S51°49'20"W
E-L425	125.28'	S78°49'10"W
E-L426	65.00'	S78°49'10"W
E-L427	15.00'	S78°49'10"W
E-L428	15.00'	S78°49'28"W
E-L429	27.50'	S11°10'50"E
E-L430	47.50'	S11°10'50"E
E-L431	10.00'	S11°10'50"E
E-L432	95.00'	S78°49'10"W
E-L433	15.00'	S78°49'10"W
E-L434	31.69'	S55°00'15"W
E-L435	15.00'	S78°48'52"W
E-L436	115.19'	N13°24'52"W
E-L437	27.50'	N11°10'50"W
E-L438	47.50'	N11°10'50"W
E-L439	10.00'	N11°10'50"W
E-L440	95.00'	S78°49'10"W
E-L441	15.00'	S78°49'10"W
E-L442	15.00'	S78°48'52"W
E-L443	27.50'	N11°10'50"W
E-L444	47.50'	N11°10'50"W
E-L445	10.00'	N11°10'50"W
E-L446	10.00'	S11°10'50"E
E-L447	15.00'	S78°49'10"W

EASEMENT LINE TABLE

LINE #	LENGTH	BEARING
E-L448	15.00'	S78°48'52"W
E-L449	27.50'	N11°10'50"W
E-L450	47.50'	N11°10'50"W
E-L451	10.00'	N11°10'50"W
E-L452	6.78'	S59°07'03"E
E-L453	46.57'	N76°35'08"E
E-L454	57.50'	N13°24'52"W
E-L455	11.73'	S76°35'08"W
E-L456	99.86'	S11°07'37"E
E-L457	42.28'	S13°24'52"E
E-L458	33.00'	S76°35'08"W
E-L459	50.00'	N13°24'52"W
E-L460	35.00'	N76°35'08"E
E-L461	50.04'	S11°07'37"E
E-L462	22.17'	S11°10'50"E
E-L463	126.13'	S73°51'26"W
E-L464	18.32'	N78°49'10"E
E-L465	17.31'	S27°48'40"E
E-L466	50.00'	S78°49'10"W
E-L467	13.99'	S58°13'00"W
E-L468	10.00'	N47°54'51"W
E-L471	152.70'	S76°47'51"W
E-L472	8.11'	N16°56'24"E
E-L473	32.44'	N20°22'44"E
E-L474	31.11'	N40°39'25"E
E-L475	27.66'	N63°47'12"E
E-L476	22.75'	S66°27'45"E
E-L477	32.89'	S85°23'38"E
E-L478	31.42'	N29°26'47"E
E-L479	11.00'	N83°18'15"W
E-L480	24.82'	N30°55'25"W
E-L481	24.17'	N69°14'45"W
E-L483	29.94'	N08°22'49"W
E-L484	23.04'	N13°47'53"W
E-L485	29.16'	N08°53'01"W
E-L486	42.38'	N13°55'32"W
E-L487	43.54'	N07°49'51"W
E-L488	29.62'	N12°13'42"W
E-L489	20.35'	N10°49'15"W
E-L490	24.47'	N10°10'47"W
E-L491	13.21'	N33°34'28"E
E-L492	19.33'	S79°37'28"E
E-L493	226.34'	N11°13'06"W
E-L494	33.83'	N11°01'58"W
E-L495	22.42'	N41°22'44"E
E-L496	34.77'	N37°50'53"E
E-L497	16.07'	N20°13'22"E
E-L498	16.52'	N75°58'14"E
E-L499	16.26'	S49°31'54"E
E-L500	34.32'	S15°40'20"E
E-L501	35.02'	S07°55'52"W
E-L502	32.90'	S14°38'46"W
E-L503	26.04'	S39°54'46"W
E-L504	19.06'	S84°20'04"W
E-L505	14.43'	S74°38'38"W
E-L506	12.61'	N22°47'56"W
E-L507	7.96'	N10°31'17"W
E-L508	20.15'	N10°56'27"W

EASEMENT CURVE TABLE

CURVE #	LENGTH	DELTA	RADIUS	TANGENT	BEARING	CHORD
E-C1	8.42'	2°45'23"	175.00'	4.21'	S14°45'53"E	8.42'
E-C2	10.01'	4°35'19"	125.00'	5.01'	S74°17'28"W	10.01'
E-C21	126.96'	41°34'05"	175.00'	66.42'	S80°23'47"E	124.20'
E-C22	10.01'	3°16'33"	175.00'	5.00'	S14°30'10"W	10.00'
E-C25	15.02'	4°55'02"	175.00'	7.51'	S38°25'15"E	15.01'
E-C26	15.02'	4°55'02"	175.00'	7.51'	S43°20'16"E	15.01'
E-C27	10.01'	3°16'33"	175.00'	5.00'	S11°13'37"W	10.00'
E-C29	27.82'	53°07'48"	30.00'	15.00'	N11°54'03"E	26.83'
E-C32	27.82'	53°07'48"	30.00'	15.00'	S41°13'45"E	26.83'
E-C33	101.56'	33°15'00"	175.00'	52.25'	N31°17'21"W	100.14'
E-C34	40.65'	13°18'31"	175.00'	20.42'	S22°47'50"E	40.56'
E-C35	26.75'	7°28'39"	205.00'	13.40'	S22°40'40"E	26.74'
E-C36	18.85'	90°00'00"	12.00'	12.00'	N56°10'50"W	16.97'
E-C37	10.01'	4°35'19"	125.00'	5.01'	N81°06'50"E	10.01'
E-C39	10.00'	3°00'57"	190.00'	5.00'	S27°48'51"E	10.00'
E-C40	57.31'	26°16'16"	125.00'	29.17'	N34°46'43"W	56.81'
E-C41	43.56'	26°16'16"	95.00'	22.17'	N34°46'43"W	43.18'
E-C42	67.05'	30°44'01"	125.00'	34.35'	S26°32'51"E	66.25'
E-C43	10.01'	5°12'46"	110.00'	5.01'	S39°49'06"E	10.00'
E-C44	42.91'	25°52'44"	95.00'	21.83'	S24°07'12"E	42.55'

NO.	DATE	REVISION
3	12-21-21	REVISED PER N. LEB. TWP., LEB. CNTY. ENG. & THE REVISED WALL DESIGN
2	9-29-21	REVISED PER SEWER AUTH., N. LEB. TWP., LEB. CNTY. ENG. & THE REVISED WALL DESIGN
1	6-18-21	REVISED PER LCCD, DEP, SEWER AUTH., N. LEB. TWP., & LCPD

FOR PIONEER MANAGEMENT BY:

MANAGER: JAMES C. HENKE
SURV. CHIEF:
FIELDBOOK NO.
DESIGN BY: JDB/KWG
CHKD BY: JDB/JCH
DRAWN BY: JDB/MLS
CHKD BY: JCH

DRAWING REFERENCE:
F:\18\18-2000-01\CAD\Final Plan\Easement.dwg

XREFS:
TB [F:\18\18-2000-01\CAD\Final Plan\X-Refs\TB.dwg]
p-base [F:\18\18-2000-01\CAD\Final Plan\X-Refs\P-Base.dwg]
Key Map [F:\18\18-2000-01\CAD\Final Plan\X-Refs\Key Map.dwg]
Street Alignments [F:\18\18-2000-01\CAD\Final Plan\C3D-Bases\Street Alignments.dwg]
HSI-SurveyBase [F:\18\18-2000-01\CAD\Final Plan\X-Refs\HSI-SurveyBase.dwg]
Dim-Base [F:\18\18-2000-01\CAD\Final Plan\C3D-Bases\Dim-Base.dwg]

CLIENT
MR. S. GERALD MUSSER
144 BELL ROAD
PALMYRA, PA 17078
(717) 821-1129

SCALE
1" = 50'
0 25' 50' 100' 150'

PIONEER
Management, LLC
111 Millersville Road, Lancaster, PA 17603
Phone (717) 481-5500 · Fax (717) 481-4955
Email: jh@pioneermanagementllc.com
Website: www.pioneermanagementllc.com

EASEMENT PLAN – LINE AND CURVE TABLES

FOR THE
FINAL SUBDIVISION AND LAND
DEVELOPMENT PLAN OF
MAPLEDALE ESTATES
NORTH LEBANON TOWNSHIP LEBANON COUNTY, PA

DATE: FEB. 25, 2021
SHEET NO. 9 OF 36
DWG. NO. 18-2000-01-B

STREET TREE PLANTING SCHEDULE		
SHADE, STREET TREES & SHRUBBERY		
BOTANICAL NAME	COMMON NAME	ROOT
ACER RUBRUM 'RED SPIRE'	AUTUMN SPIRE RED MAPLE	B&B
CERCIDIPHYLLUM JAPONICUM	KATSURA TREE	B&B
GLEDITSIA TRIACANTHOS INERMIS 'STREET KEEPER'	STREET KEEPER HONEYLOCUST	B&B
PRUNUS SERRULATA 'KWANZAN'	JAPANESE FLOWERING CHERRY 'KWANZAN'	B&B
QUERCUS PHELLOS	WILLOW OAK	B&B
ZELKOVA SERRATA 'GREEN VASE'	GREEN VASE ZELKOVA	B&B

SEE NEXT SHEET FOR BASIN PLANTING NOTES.

STREET TREE PLANTING NOTES:

STREET TREES
SHALL BE PROVIDED ALONG THE FRONTAGE OF ALL NEW LOTS. WHEN REQUIRED, STREET TREES SHALL CONFORM WITH THE FOLLOWING:

a. THE TREE SHALL BE NURSERY GROWN IN A CLIMATE SIMILAR TO THAT OF THE LOCALITY OF THE PROJECT.
b. ALL TREES SHALL HAVE A NORMAL HABIT OF GROWTH AND SHALL BE SOUND, HEALTHY, AND VIGOROUS; THEY SHALL BE FREE FROM DISEASE, INSECTS, INSECT EGGS, AND LARVAE.
c. THE TRUNK DIAMETER, MEASURED AT A HEIGHT OF SIX (6) INCHES ABOVE FINISHED GRADE, SHALL BE A MINIMUM OF TWO (2) INCHES.
d. TREES SHALL BE PLANTED BETWEEN THE STREET RIGHT-OF-WAY LINE AND THE BUILDING SETBACK LINE, AT A MAXIMUM SPACING OF ONE HUNDRED (100) FEET.
e. ALL PLANTING SHALL BE PERFORMED IN CONFORMANCE WITH GOOD NURSERY AND LANDSCAPE PRACTICE.
f. REQUIREMENTS FOR THE MEASUREMENTS, BRANCHING, GRADING, QUALITY, BALLING, AND THE BURLAPPING OF TREES SHALL FOLLOW THE CODE OF STANDARDS RECOMMENDED BY THE AMERICAN ASSOCIATION OF NURSERYMEN, INC., IN THE AMERICAN STANDARD FOR NURSERY STOCK, ANSIZ60, 1-1973, AS AMENDED.

INFILTRATION BASIN #2 PLANTING SCHEDULE

KEY	QTY.	BOTANICAL NAME	COMMON NAME	SIZE/CONDITIONS
AA	1	AMELANCHIER ARBOREA	SERVICEBERRY	6'-7' B&B (MULTI-STEMMED)
AR	1	ACER RUBRUM	RED MAPLE	1.5" CAL. B&B
BN	4	BETULA NIGRA	RIVER BIRCH	6'-7' B&B (MULTI-STEMMED)
CA	5	CORNUS AMOMUM	SILKY DOGWOOD	NO. 5 CONTAINER
CO	7	CEPHALANTHUS OCCIDENTALIS	BUTTONBUSH	NO. 5 CONTAINER
CR	5	CORNUS RACEMOSA	GRAY DOGWOOD	NO. 5 CONTAINER
CS	3	CORNUS SERICEA	RED OSIER DOGWOOD	NO. 5 CONTAINER
NS	1	NYSSA SYLVATICA	BLACKGUM	1.5" CAL. B&B

INFILTRATION BASIN #2 PLANTING ZONES

PLANTING ZONE 1 (RAISED FINGERS) (ERNMX-127 WITH 24" AMENDED SOIL)

PLANTING ZONE 2 (ERNMX-127 WITH 24" AMENDED SOIL)

SEE FOLLOWING SHEET FOR SOIL RESOLUTION NOTES.

LIGHTING NOTE

CONTRACTOR IS RESPONSIBLE FOR $2,000 FOR EACH STREET LIGHT, OR ACTUAL AMOUNT AS BILLED BY MET-ED TO TOWNSHIP.

RETENTION BASIN WILDLIFE MIX
(ERNMX-127)
APPLICATION RATE - 15 POUNDS PER ACRE OR 1/2 LB PER 1,000 S.F.

30%	PANICUM RIGIDULUM	REDTOP PANICGRASS
20%	POA PALUSTRIS	FOWL BLUEGRASS
15%	ELYMUS VIRGINICUS	VIRGINIA WILDRYE
12%	CAREX LURIDA	LURID (SHALLOW) SEDGE
5%	PANICUM CLANDESTINUM	DEERTONGUE, TIOGA
4%	VERBENA HASTATA	BLUE VERVAIN
3%	CAREX LUPULINA	HOP SEDGE
3%	JUNCUS EFFUSUS	SOFT RUSH
2%	SCIRPUS CYPERINUS	WOOL GRASS
2%	AGROSTIS SCABRA	TICKLEGRASS
2%	AGROSTIS PERENNANS	AUTUMN BENTGRASS
1%	SCIRPUS ATROVIRENS	GREEN BULRUSH
1%	ASTER PUNICEUS	PURPLESTEM ASTER

SEED CAN BE OBTAINED BY CONTACTING:
ERNST CONSERVATION SEEDS
8884 MERCER PIKE MEADVILLE, PA 16335
(800)873-3321 WWW.ERNSTSEED.COM

NOTES:
1. IN ADDITION TO THE ABOVE MIX, APPLY A TEMPORARY COVER CROP OF ANNUAL RYE AT A RATE OF ONE POUND PER THOUSAND SQUARE FEET.
2. THIS SHOULD BE MOWED TO 6" THE FIRST FALL. THEREAFTER MOW IN DORMANT SEASON ONLY.
3. FOREBAY AND BASIN OPERATION AND MAINTENANCE: MOW NATIVE SEEDING AREA IN DORMANT SEASON, REMOVE INVASIVE SPECIES AND WOODY SAPLINGS, REPAIR ANY ERODED AREAS AND STABILIZE WITH SEED AND MULCH.

INFILTRATION BASIN #2 BOTTOM SEEDING

INFILTRATION BASIN #2 PLANTING NOTES

SEEDING:

1. ALL DESIGNATED ZONES WITHIN THE BASIN ARE TO BE SEEDED WITH ERNMX-127 AT AN APPLICATION RATE OF 15 POUNDS PER ACRE OR 1/2 LB PER 1,000 S.F. IMMEDIATELY AFTER CONSTRUCTION (BUT ONLY AFTER ALL CONTRIBUTING DRAINAGE AREAS HAVE BEEN STABILIZED). THIS RETENTION BASIN WILDLIFE MIX - LOW MAINTENANCE CONTAINS A VARIETY OF WETLAND SEEDS COMMONLY FOUND WITHIN STORMWATER BASINS. SEED SHALL BE HELD IN PLACE BY COVERING WITH A TEMPORARY EROSION CONTROL MATTING SUCH AS JUTE MATTING OR NORTH AMERICAN GREEN S75.
2. SEEDING TO OCCUR IMMEDIATELY AFTER CONSTRUCTION (BUT ONLY AFTER ALL CONTRIBUTING DRAINAGE AREAS HAVE BEEN STABILIZED AND DURING A TIME WITH SUFFICIENT PRECIPITATION), THEN ALLOW THE BASIN TO SIT FOR 1 GROWING SEASON, PRIOR TO INSTALLING THE POTENTIAL HERBACEOUS PLUGS, TREES AND SHRUBS. THIS WILL ALLOW FOR OBSERVATION OF THE OPERATING WATER LEVELS WITHIN THE BASIN AND PROVIDE FOR THE HIGHEST SURVIVABILITY OF THE PLANTED PLUGS AND SHRUBS. WITH OBSERVATION OF THE OPERATING WATER LEVELS THROUGHOUT A GROWING SEASON, THE APPROPRIATE PLANTING LOCATIONS CAN BE SELECTED FOR THE PLUGS AND SHRUBS. OWNER/DEVELOPER SHALL CONTACT THE WETLAND BIOLOGIST ONE YEAR AFTER CONVERSION OF THE SEDIMENT FACILITIES TO PERMANENT BASIN TO EVALUATE THE INSTALLATION OF PLANTINGS OF ZONE 2 PLANT MATERIALS.

TREES AND SHRUBS (ZONE 1):

1. THE TREES AND SHRUBS ARE TO BE PLANTED IN ZONE 1. THIS IS GENERALLY THE PERIMETER OF THE BASIN AND THE RAISED FINGERS IN THE BOTTOM OF THE BASIN. SPACING SHOULD BE NO LESS THEN 8' X 8', BUT COULD BE FURTHER APART DEPENDING ON THE AMOUNT OF TREES AND SHRUBS PLANTED.

HERBACEOUS PLANTINGS (ZONE 2):

1. THE HERBACEOUS PLUG PLANTINGS SHALL BE PLANTED IN THE ZONE DESIGNATED AS 2. THE ZONE IS BASED ON THE POTENTIAL DEPTH OF THE WATER LEVELS WITHIN THE AREA. A PLANT LIST BELOW IS PROVIDED FOR ZONE 2. THE PLANTINGS SHOULD BE NO LESS THAN 3' X 3' ON CENTER, BUT COULD BE FURTHER APART DEPENDING ON THE AMOUNT OF PLUGS DESIRED.

ZONE 2:

ASCLEPIAS INCARNATE (SWAMP MILKWEED)
ASTER PUNICEUS (PURPLE STEMMED ASTER)
CAREX COMOSA (BOTTLEBRUSH SEDGE)
CAREX SCOPARA (BROOM SEDGE)
CAREX VULPINOIDEA (FOX SEDGE)
EPILOBIUM COLORATUM (PURPLE WILLOW HERB)
EUPATORIUM FISTULOSUM (JOE PYE WEED)
IRIS PSEUDOACORUS (YELLOW IRIS)
JUNCUS CANADENSIS (CANADA RUSH)
JUNCUS EFFUSES (SOFT RUSH)
LOBELIA CARDINALIS (CARDINAL FLOWER)
LOBELIA SIPHILITICA (GREAT BLUE LOBELIA)
POLYGONUM PENSYLVANICUM (SMARTWEED)
SCIRPUS ATROVIRENS (GREEN BULRUSH)
SCIRPUS PUNGENS (THREE-SQUARE BULRUSH)


WATER EDGE COURT
WALNUT CREST DRIVE
DAISY DRIVE
DREAM DRIVE
SWALE 37
SWALE 29
SWALE 33
SWALE 11A
SWALE
DRAINAGE EASEMENT
SNOW STOCKPILE EASEMENT
INFILTRATION BASIN #2
ROCK FILTER
PROPOSED RIP-RAP OUTLET PROTECTION
50' WIDE EMERGENCY SPILLWAY EL.=610.50
EARTHEN LEVEL SPREADER
PROPOSED RIP-RAP OUTLET PROTECTION
8' WIDE TOP OF BERM EL.=612.00
BENCHMARK: CAPPED REBAR ELEVATION=613.04' DATUM=NAVD88
STREET LIGHT (TYP.)
STREET TREE (TYP.)
10' MIN. (TYP.) UTILITY EASEMENT
Cultivated Land
Existing Dwelling
Patio
Pool
Shed
Garage
Gazebo
Deck
Pump House
Tennis Court
Start Curb
Sanitary MH Rim=629.87
Inlet Rim=615.86 Grate=615.36
Inlet Rim=615.87 Grate=615.37
Inlet Rim=615.88 Grate=615.38
Inlet Rim=615.89 Grate=615.39
Inlet Rim=615.90 Grate=615.40
Inlet Rim=615.91 Grate=615.41
Inlet Rim=615.92 Grate=615.42
Inlet Rim=615.93 Grate=615.43
Inlet Rim=615.94 Grate=615.44
Inlet Rim=615.95 Grate=615.45
Inlet Rim=615.96 Grate=615.46
Inlet Rim=615.97 Grate=615.47
Inlet Rim=615.98 Grate=615.48
Inlet



KEY MAP
SCALE: 1"=1000'

RETENTION BASIN FLOOR MIX – LOW MAINTENANCE
(ERNMX-126)
APPLICATION RATE – 20-40 POUNDS PER ACRE OR 1 LB PER 1,000 S.F.

25%	PANICUM RIGIDULUM	REDTOP PANICGRASS
16%	ELYMUS VIRGINICUS	VIRGINIA WILDRYE
16%	PUCCINELLIA DISTANS, FULTS	ALKALIGRASS, FULTS
15%	POA PALUSTRIS	FOWL BLUEGRASS
10%	AGROSTIS STOLONIFERA	CREEPING BENTGRASS
10%	AGROSTIS SCABRA	TICKLEGRASS
5%	JUNCUS EFFUSUS	SOFT RUSH
2%	AGROSTIS PERENNANS	AUTUMN BENTGRASS
1%	JUNCUS TENUIS	PATH RUSH

SEED CAN BE OBTAINED BY CONTACTING:
ERNST CONSERVATION SEEDS
8884 MERCER PIKE MEADVILLE, PA 16335
(800)873-3321 WWW.ERNSTSEED.COM

NOTE:
IN ADDITION TO THE ABOVE MIX, APPLY A TEMPORARY COVER CROP OF ANNUAL RYE AT A RATE OF ONE POUND PER THOUSAND SQUARE FEET

BIO-RETENTION #1 BASIN BOTTOM SEEDING

SOIL RESOLUTIONS

EASILY ERODIBLE –DUFFIELD AND HAGERSTOWN SOILS ARE CONSIDERED EASILY ERODIBLE. THE USE OF EROSION CONTROL BLANKETS OR MULCHES ON SLOPES 3:1 OR GREATER ARE REQUIRED ON THIS PROJECT. THE ESTABLISHMENT PERIOD FOR A DENSE VEGETATIVE COVER IS CRITICAL. IDEALLY, FLOW SHOULD BE DIVERTED AWAY FROM PROPOSED SLOPES AND SWALES UNTIL GRASS CAN BE ESTABLISHED BUT WHEN THIS IS NOT PRACTICAL, PROMPT PLACEMENT AND ANCHORING OF THE EROSION CONTROL BLANKET IS CRITICAL.

FROST ACTION –PRECAUTIONS ARE NEEDED TO PREVENT DAMAGE TO THE SOILS CONSTRUCTION. DO NOT PLACE FILL MATERIAL ON SATURATED OR FROZEN GROUND. WHEN FREEZING TEMPERATURES ARE EXPECTED, DO NOT EXCAVATE TO FULL DEPTH INDICATED, UNLESS FILL MATERIAL CAN BE PLACED IMMEDIATELY AFTER EXCAVATION HAS BEEN COMPLETED.

LOW STRENGTH – PRECAUTIONS SHOULD BE TAKEN TO PREVENT SLOPE FAILURES DUE TO IMPROPER CONSTRUCTION PRACTICES SUCH AS OVER-STEEPENING AND OVERLOADING OF SLOPES, REMOVAL OF LATERAL SUPPORT, AND FAILURE TO PREVENT SATURATION OF SLOPES.

POOR SOURCE OF TOPSOIL – SOIL TESTS ARE RECOMMENDED TO DETERMINE THE PROPER APPLICATION OF SOIL AMENDMENTS TO PROMOTE THE GROWTH OF THE DESIRED VEGETATION. WHEREVER SOILS THAT ARE GOOD TO FAIR SOURCES FOR TOPSOIL EXIST ON THE SITE, THEY SHOULD BE PRESERVED AND STORED FOR LATER USE IN RESTORATION.

SHRINK-SWELL –IS RECOMMENDED THAT CONSTRUCTION ACTIVITIES INVOLVING THIS SOIL NOT TAKE PLACE WHEN THE SOIL IS EXCESSIVELY WET. SOILS SHALL BE MAINTAINED WITHIN 20% OF OPTIMUM MOISTURE CONTENT AT TIME OF COMPACTION. WETTING OR DRYING OF THE MATERIAL AND MANIPULATION TO SECURE UNIFORM MOISTURE CONTENT THROUGHOUT THE LAYER MAY BE NECESSARY.

POTENTIAL SINKHOLE –HAGERSTOWN SOILS ARE UNDERLAIN WITH CARBONATE GEOLOGY AND HAVE THE POTENTIAL TO FORM SINKHOLES. THE CONTRACTOR SHALL BECOME THOROUGHLY FAMILIAR WITH THE RECOMMENDATIONS PROVIDED ON THE PLANS REGARDING SINKHOLES.

SEE PREVIOUS SHEET FOR BASIN #2 AND STREET TREE PLANTING SCHEDULE & NOTES.

BIO-RETENTION #1 PLANTING SCHEDULE

KEY	QTY.	BOTANICAL NAME	COMMON NAME	SIZE/CONDITIONS
AA	4	AMELANCHIER ARBOREA	SERVICEBERRY	6'-7' B&B (MULTI-STEMMED)
BN	3	BETULA NIGRA	RIVER BIRCH	6'-7' B&B (MULTI-STEMMED)
CA	5	CORNUS AMOMUM	SILKY DOGWOOD	NO. 5 CONTAINER
CO	6	CEPHALANTHUS OCCIDENTALIS	BUTTONBUSH	NO. 5 CONTAINER
CR	5	CORNUS RACEMOSA	GRAY DOGWOOD	NO. 5 CONTAINER
CS	10	CORNUS SERICEA	RED OSIER DOGWOOD	NO. 5 CONTAINER
NS	3	NYSSA SYLVATICA	BLACKGUM	1.5" CAL. B&B

BIO-RETENTION BASIN #1 PLANTING ZONES

PLANTING ZONE 1 (RAISED FINGERS) (ERNMX-126 WITH 30" AMENDED SOIL)

PLANTING ZONE 2 (ERNMX-126 WITH 30" AMENDED SOIL)

BIO-RETENTION BASIN #1 PLANTING NOTES

SEEDING:

1. ALL DESIGNATED ZONES WITHIN THE BASIN ARE TO BE SEEDED WITH ERNMX-126 AT AN APPLICATION RATE OF 20-40 POUNDS PER ACRE OR 1 LB PER 1,000 S.F. IMMEDIATELY AFTER CONSTRUCTION (BUT ONLY AFTER ALL CONTRIBUTING DRAINAGE AREAS HAVE BEEN STABILIZED). THIS RETENTION BASIN FLOOR MIX – LOW MAINTENANCE CONTAINS A VARIETY OF WETLAND SEEDS COMMONLY FOUND WITHIN STORMWATER BASINS. SEED SHALL BE HELD IN PLACE BY COVERING WITH A TEMPORARY EROSION CONTROL MATTING SUCH AS JUTE MATTING OR NORTH AMERICAN GREEN S75.
2. SEEDING TO OCCUR IMMEDIATELY AFTER CONSTRUCTION (BUT ONLY AFTER ALL CONTRIBUTING DRAINAGE AREAS HAVE BEEN STABILIZED AND DURING A TIME WITH SUFFICIENT PRECIPITATION), THEN ALLOW THE BASIN TO SIT FOR 1 GROWING SEASON, PRIOR TO INSTALLING THE POTENTIAL HERBACEOUS PLUGS, TREES AND SHRUBS. THIS WILL ALLOW FOR OBSERVATION OF THE OPERATING WATER LEVELS WITHIN THE BASIN AND PROVIDE FOR THE HIGHEST SURVIVABILITY OF THE PLANTED PLUGS AND SHRUBS. WITH OBSERVATION OF THE OPERATING WATER LEVELS THROUGHOUT A GROWING SEASON, THE APPROPRIATE PLANTING LOCATIONS CAN BE SELECTED FOR THE PLUGS AND SHRUBS. OWNER/DEVELOPER SHALL CONTACT THE WETLAND BIOLOGIST ONE YEAR AFTER CONVERSION OF THE SEDIMENT FACILITIES TO PERMANENT BASIN TO EVALUATE THE INSTALLATION OF PLANTINGS OF ZONE 2 PLANT MATERIALS.

TREES AND SHRUBS (ZONE 1):

1. THE TREES AND SHRUBS ARE TO BE PLANTED IN ZONE 1. THIS IS GENERALLY THE PERIMETER OF THE BASIN AND THE RAISED FINGERS IN THE BOTTOM OF THE BASIN. SPACING SHOULD BE NO LESS THEN 8' X 8', BUT COULD BE FURTHER APART DEPENDING ON THE AMOUNT OF TREES AND SHRUBS PLANTED.

BOTTOM SEEDING (ZONE 2):

1. ZONE 2 WITHIN BIO-RETENTION BASIN #1 SHALL CONSIST OF ERNST SEED MIX (ERNMX-126) WITH 30" OF AMENDED SOIL.

LIGHTING NOTE

CONTRACTOR IS RESPONSIBLE FOR $2,000 FOR EACH STREET LIGHT, OR ACTUAL AMOUNT AS BILLED BY MET-ED TO TOWNSHIP.

LEGEND

EXISTING PROPERTY BOUNDARY
EXISTING WETLAND BOUNDARY LINE
EXISTING ADJOINER LINE
PROPOSED LOT LINE
EXISTING LOT MARKER
EXISTING CENTERLINE
PROPOSED CENTERLINE
EXISTING EDGE OF CARTWAY
PROPOSED EDGE OF PAVEMENT/CURB
EXISTING RIGHT-OF-WAY LINE
PROPOSED RIGHT-OF-WAY LINE
EXISTING EASEMENT LINE
PROPOSED EASEMENT LINE
EXISTING FENCE
PROPOSED FENCE
EXISTING CONTOUR LINE
PROPOSED CONTOUR LINE
PROPOSED SPOT ELEVATION
EXISTING SIGN
PROPOSED SIGN
PROPOSED STOP SIGN
PROPOSED STREET NAME SIGN
PROPOSED CONCRETE MONUMENT
BENCHMARK
EXISTING TREELINE / BRUSHLINE
EXISTING VEGETATION
PROPOSED STREET TREE
EXISTING UTILITY POLE W/ GUY WIRE
EXISTING OVERHEAD ELECTRIC
EXISTING ELECTRIC BOX
EXISTING CABLE BOX
EXISTING TELEPHONE BOX
EXISTING LIGHT
PROPOSED STREET LIGHT
EXISTING WELL
EXISTING WATERLINE
EXISTING WATER VALVE
EXISTING FIRE HYDRANT
PROPOSED WATERLINE
PROPOSED WATER VALVE
PROPOSED FIRE HYDRANT
PROPOSED WATERLINE LATERAL
EXISTING SANITARY SEWER MANHOLE
EXISTING GRAVITY SANITARY SEWER
EXISTING SANITARY SEWER CLEAN OUT
PROPOSED SANITARY SEWER LINE
PROPOSED SANITARY SEWER MANHOLE
PROPOSED SANITARY SEWER MANHOLE LABEL
PROPOSED SANITARY SEWER LATERAL
EXISTING STORM PIPE
EXISTING STORM MANHOLE
EXISTING STORM INLET
PROPOSED STORM PIPE
PROPOSED STORM INLET
PROPOSED STORM HEADWALL/ENDWALL
PROPOSED STORM MANHOLE
PROPOSED STORM STRUCTURE LABEL (I-9 INLET; EW-3 ENDWALL/HEADWALL; SMH-4 STORM MANHOLE)
PROPOSED PIPE OUTLET PROTECTION
EXISTING GAS LINE
EXISTING GAS VALVE OR METER
EXISTING PROPANE TANK
PROPOSED CLEAR SIGHT TRIANGLE
PROPOSED RETAINING WALL
PROPOSED LOT NUMBER
LEVEL SPREADER OR INFILTRATION TRENCH (SEE GRADING PLAN)

NO.	DATE	REVISION
3	12-21-21	REVISED PER N. LEB. TWP., LEB. CNTY. ENG. & THE REVISED WALL DESIGN
2	9-29-21	REVISED PER SEWER AUTH, N. LEB. TWP., LEB. CNTY. ENG. & THE REVISED WALL DESIGN
1	6-18-21	REVISED PER LCCD, DEP, SEWER AUTH., N. LEB. TWP., & LCPD

FOR PIONEER MANAGEMENT BY:
COMMONWEALTH OF PENNSYLVANIA JOHN C. WOLFE 12314 REGISTERED PROFESSIONAL ENGINEER

MANAGER: JAMES C. HENKE
SURV. CHIEF:
FIELDBOOK NO.
DESIGN BY: JDB/KWG
CHKD BY: JDB/JCH
DRAWN BY: JDB/MLS
CHKD BY: JCH
DRAWING REFERENCE:
F:\18\18-2000-01\CAD\Xtop Plan\LS.dwg
XREFS:
TB [F:\18\18-2000-01\CAD\Xtop Plan\X-Mark\TB.dwg]
Xtop Plan [F:\18\18-2000-01\CAD\Xtop Plan\Xtop Plan-Base.dwg]
Xtop Mark [F:\18\18-2000-01\CAD\Xtop Plan\X-Mark\Xtop Plan-Layout Alignments.dwg]
Xtop Plan [F:\18\18-2000-01\CAD\Xtop Plan\Xtop Plan-Layout Alignments.dwg]
XSP-SurvaBase [F:\18\18-2000-01\CAD\Xsp Plan\XSP-SurvaBase.dwg]

CLIENT
MR. S. GERALD MUSSER
144 BELL ROAD
PALMYRA, PA 17078
(717) 821-1129

SCALE
1" = 50'
0 25' 50' 100' 150'

PIONEER Management, LLC
111 Millersville Road, Lancaster, PA 17603
Phone: (717) 715-1396 Fax: (717) 481-4955
Email: info@pioneermanagementllc.com
Website: www.pioneermanagementllc.com

LANDSCAPING AND LIGHTING PLAN
FOR THE
FINAL SUBDIVISION AND LAND DEVELOPMENT PLAN OF
MAPLEDALE ESTATES
NORTH LEBANON TOWNSHIP LEBANON COUNTY, PA.

DATE: FEB. 25, 2021
SHEET NO. 11 OF 36
DWG. NO. 18-2000-01-B

F:\18\18-2000-01\CAD\Final Plan\Grading.dwg, 12/20/2021 1:47:25 PM, 1:1

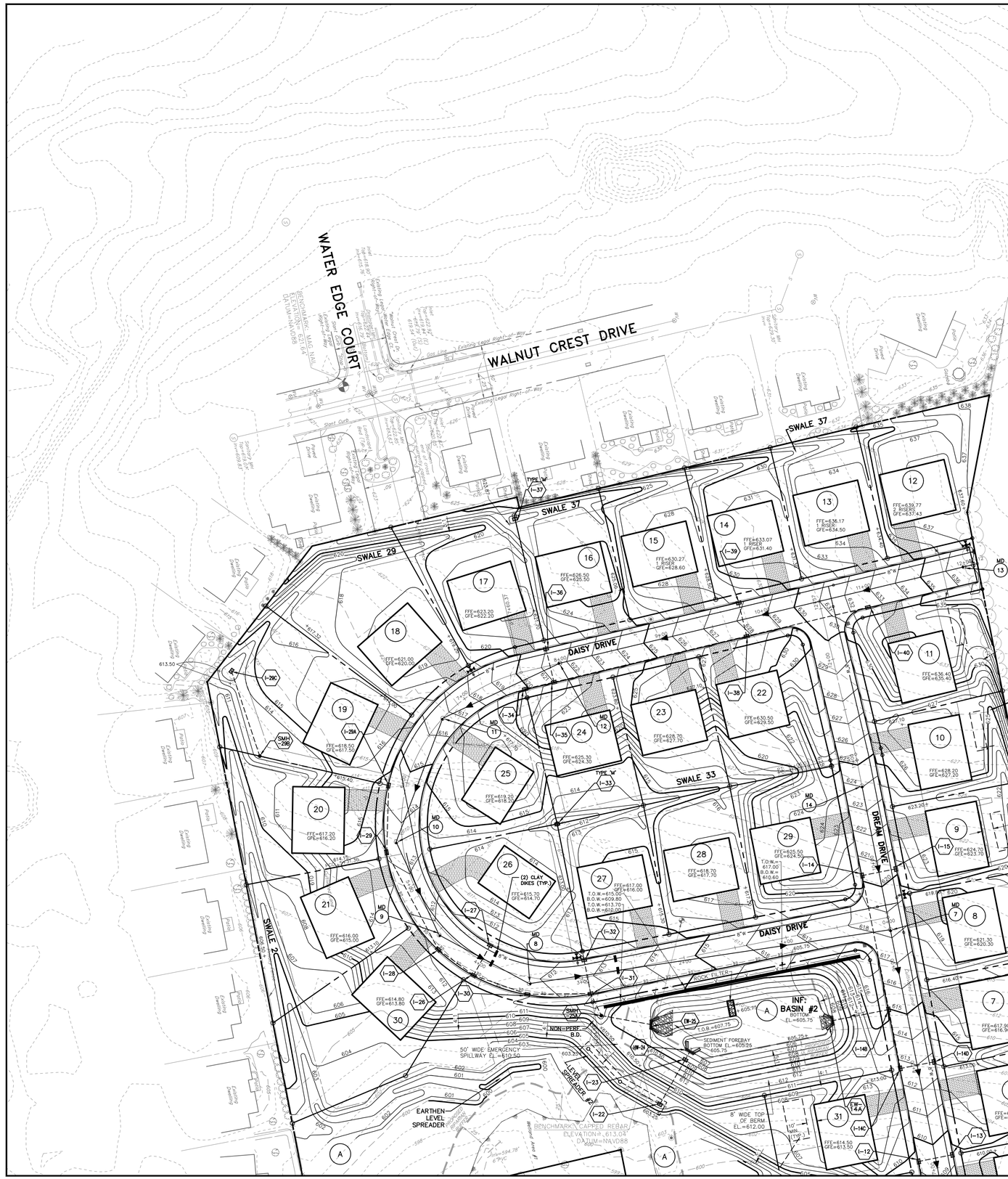

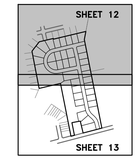

KEY MAP

SCALE: 1"=1000'

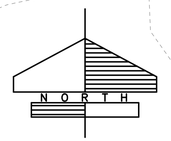

NOTE

1. SUMP PUMP DISCHARGE AND GROUNDWATER ENCOUNTERED DURING CONSTRUCTION SHALL BE DIRECTED TO THE WETLANDS AND NOT INTO THE BMPS.
2. FINISHED GRADE SHALL FALL A MINIMUM OF 6" AWAY FROM ALL FOUNDATIONS FOR THE FIRST 10'.

LEGEND

- EXISTING PROPERTY BOUNDARY
- EXISTING WETLAND BOUNDARY LINE
- EXISTING ADJOINER LINE
- PROPOSED LOT LINE
- EXISTING LOT MARKER
- PROPOSED LOT MARKER
- EXISTING CENTERLINE
- PROPOSED CENTERLINE
- EXISTING EDGE OF CARTWAY
- PROPOSED EDGE OF PAVEMENT/CURB
- EXISTING RIGHT-OF-WAY LINE
- PROPOSED RIGHT-OF-WAY LINE
- EXISTING EASEMENT LINE
- PROPOSED EASEMENT LINE
- EXISTING FENCE
- PROPOSED FENCE
- EXISTING CONTOUR LINE
- PROPOSED CONTOUR LINE
- PROPOSED SPOT ELEVATION
- PROPOSED FINISHED FLOOR ELEVATION
- PROPOSED GARAGE FINISHED FLOOR ELEVATION
- EXISTING SIGN
- PROPOSED SIGN
- PROPOSED STOP SIGN
- PROPOSED STREET NAME SIGN
- PROPOSED CONCRETE MONUMENT
- BENCHMARK
- EXISTING TREELINE / BRUSHLINE
- EXISTING VEGETATION
- EXISTING UTILITY POLE W/ GUY WIRE
- EXISTING OVERHEAD ELECTRIC
- EXISTING ELECTRIC BOX
- EXISTING CABLE BOX
- EXISTING TELEPHONE BOX
- EXISTING LIGHT
- PROPOSED STREET LIGHT
- EXISTING WELL
- EXISTING WATERLINE
- EXISTING WATER VALVE
- EXISTING FIRE HYDRANT
- PROPOSED WATERLINE
- PROPOSED WATER VALVE
- PROPOSED FIRE HYDRANT
- EXISTING SANITARY SEWER MANHOLE
- EXISTING GRAVITY SANITARY SEWER
- EXISTING SANITARY SEWER CLEAN OUT
- PROPOSED SANITARY SEWER MANHOLE
- PROPOSED SANITARY SEWER MANHOLE LABEL
- PROPOSED SANITARY SEWER LINE
- PROPOSED CONCRETE ENCASEMENT
- EXISTING STORM PIPE
- EXISTING STORM MANHOLE
- EXISTING STORM INLET
- PROPOSED STORM PIPE
- PROPOSED BASEDRAIN
- PROPOSED STORM INLET
- PROPOSED STORM HEADWALL/ENDWALL
- PROPOSED STORM MANHOLE
- PROPOSED STORM STRUCTURE LABEL (I-9 INLET, EW-3 ENDWALL/HEADWALL, SMH- STORM MANHOLE)
- PROPOSED PIPE OUTLET PROTECTION
- EXISTING GAS LINE
- EXISTING GAS VALVE OR METER
- EXISTING PROPANE TANK
- PROPOSED DRIVEWAY
- PROPOSED RETAINING WALL
- PROPOSED LOT NUMBER
- LEVEL SPREADER OR INFILTRATION TRENCH (SEE PLAN)

NO.	DATE	REVISION
3	12-21-21	REVISED PER N. LEB. TWP., LEB. CNTY. ENG. & THE REVISED WALL DESIGN
2	9-29-21	REVISED PER SEWER AUTH, N. LEB. TWP., LEB. CNTY. ENG. & THE REVISED WALL DESIGN
1	6-18-21	REVISED PER LCCD, DEP, SEWER AUTH., N. LEB. TWP., & LCPD

FOR PIONEER MANAGEMENT BY:

SURV. CHIEF: FIELDBOOK NO.

DRAWN BY: JDB/MLS — CHKD BY: JCH

MANAGER: JAMES C. HENKE

DESIGN BY: JDB/KWG — CHKD BY: JDB/JCH

DRAWING REFERENCE: F:\18\18-2000-01\CAD\Other Plans\Grading.dwg

XREFS:
Ttb (F:\18\18-2000-01\CAD\Final Plan\V-Mark.TB.dwg)
Proj Bdy (F:\18\18-2000-01\CAD\Final Plan\Proj Bdy.dwg)
Prop Wall (F:\18\18-2000-01\CAD\Final Plan\Proposed Wall Alignments.dwg)
Prop Lot Lines (F:\18\18-2000-01\CAD\Final Plan\Lot Lines.dwg)
XSP-Surveyfloor (F:\18\18-2000-01\CAD\Final Plan\XSP-Surveyfloor.dwg)

CLIENT
MR. S. GERALD MUSSER
144 BELL ROAD
PALMYRA, PA 17078
(717) 821-1129

SCALE
0 25' 50' 100' 150'
1" = 50'

PIONEER
Management, LLC
111 Millersville Road, Lancaster, PA 17603
Phone: (717) 715-1396 Fax: (717) 481-4855
Email: jrb@pioneermanagementllc.com
Website: www.pioneermanagementllc.com

GRADING PLAN

FOR THE
FINAL SUBDIVISION AND LAND
DEVELOPMENT PLAN OF

MAPLEDALE ESTATES

NORTH LEBANON TOWNSHIP — LEBANON COUNTY, PA

DATE: FEB. 25, 2021

SHEET NO. 12 OF 36

DWG. NO. 18-2000-01-B

F:\2018-2000-01\CAD\Final Plan\Grading.dwg, 1/13/2021 1:47:13 PM, 1:1


SEE SHEET 12
MATCHLINE
BIO-RETENTION BASIN #1
SEDIMENT FOREBAY BOTTOM EL.=605.25
605.75
50' WIDE EMERGENCY SPILLWAY EL.=610.50
120' WIDE EMERGENCY SPILLWAY EL.=603.40
EARTHEN LEVEL SPREADER
LEVEL SPREADER #1
LEVEL SPREADER #2
8' WIDE TOP OF BERM EL.=612.00
8' WIDE TOP OF BERM EL.=604.80
BENCHMARK: CAPPED REBAR
ELEVATION=613.04'
DATUM=NAVD88
BENCHMARK: MAG NAIL
ELEVATION=607.09
DATUM=NAVD88
SWALE 1A
SWALE 1B
SWALE 3
SWALE 19
DREAM DRIVE
LANTERN DRIVE
EAST MAPLE STREET (S.R. 1004)
END CAP
NON-PERF. B.D.
Wetland Area #1
Wetland Area #2
Existing Greenhouse
Existing Townhouse Dwellings
Existing Barn
Existing Garage
Existing Dwelling
Existing Propane Tanks
Existing Sand Mound
Existing Landscape Area
Existing Gravel Drive
Existing Sidewalk
Existing Paved Drive
Existing Paved Path
Existing Township Right-of-Way
Existing Utility Pole
Existing Fire Hydrant
Existing Vertical Curb
Existing Depressed Curb
Existing Inlet
Existing Manhole
Existing Guide Rail
Existing Overhead Electric
Existing Gas Line
Existing Water Line
Existing Fence
Existing Contour Line
Existing Treeline
Existing Edge of Pavement
Existing Right-of-Way Line
Existing Easement Line
Existing Property Boundary
Existing Wetland Boundary Line
Existing Adjoiner Line
Existing Lot Marker
Existing Centerline
Existing Edge of Cartway
Existing Underground Electric
Existing Underground Telephone
Existing Underground Cable
Existing Underground Gas Line
Existing Underground Water Line
Existing Underground Sanitary Sewer Line
Existing Underground Storm Sewer Line
Existing Underground Storm Sewer Pipe
Existing Underground Sanitary Sewer Pipe
Existing Underground Water Pipe
Existing Underground Gas Pipe
Existing Underground Electric Pipe
Existing Underground Telephone Pipe
Existing Underground Cable Pipe
Existing Underground Electric Line
Existing Underground Telephone Line
Existing Underground Cable Line



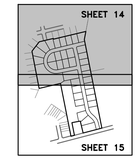

KEY MAP

SCALE: 1"=1000'

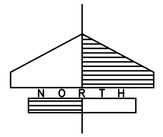

NOTES

1. SUMP PUMP DISCHARGE AND GROUNDWATER ENCOUNTERED DURING CONSTRUCTION SHALL BE DIRECTED TO THE WETLANDS AND NOT INTO THE BMPS.
2. WATER MAIN SHALL BE INSULATED AT ALL CROSSINGS WITH THE STORM SEWER PIPING.
3. BASE DRAIN SHALL NOT CONNECT TO ANY INLET.

LEGEND

- EXISTING PROPERTY BOUNDARY
- EXISTING WETLAND BOUNDARY LINE
- EXISTING ADJOINER LINE
- PROPOSED LOT LINE
- EXISTING LOT MARKER
- PROPOSED LOT MARKER
- EXISTING CENTERLINE
- PROPOSED CENTERLINE
- EXISTING EDGE OF CARTWAY
- PROPOSED EDGE OF PAVEMENT/CURB
- EXISTING RIGHT-OF-WAY LINE
- PROPOSED RIGHT-OF-WAY LINE
- EXISTING EASEMENT LINE
- PROPOSED EASEMENT LINE
- EXISTING FENCE
- PROPOSED FENCE
- EXISTING SIGN
- BENCHMARK
- EXISTING TREELINE / BRUSHLINE
- EXISTING VEGETATION
- PROPOSED STREET TREE
- EXISTING UTILITY POLE W/ GUY WIRE
- EXISTING OVERHEAD ELECTRIC
- EXISTING ELECTRIC BOX
- EXISTING CABLE BOX
- EXISTING TELEPHONE BOX
- EXISTING LIGHT
- PROPOSED STREET LIGHT
- EXISTING WELL
- EXISTING WATERLINE
- EXISTING WATER VALVE
- EXISTING FIRE HYDRANT
- PROPOSED WATERLINE
- PROPOSED WATER VALVE
- PROPOSED FIRE HYDRANT
- PROPOSED WATERLINE LATERAL
- EXISTING SANITARY SEWER MANHOLE
- EXISTING GRAVITY SANITARY SEWER
- EXISTING SANITARY SEWER CLEAN OUT
- PROPOSED SANITARY SEWER MANHOLE
- PROPOSED SANITARY SEWER MANHOLE LABEL
- PROPOSED SANITARY SEWER LINE
- PROPOSED SANITARY SEWER LATERAL
- EXISTING STORM PIPE
- EXISTING STORM MANHOLE
- EXISTING STORM INLET
- PROPOSED STORM PIPE
- PROPOSED BASEDRAIN
- PROPOSED STORM INLET
- PROPOSED STORM HEADWALL/ENDWALL
- PROPOSED STORM MANHOLE
- PROPOSED STORM STRUCTURE LABEL (I-9 INLET; EW-3 ENDWALL/HEADWALL; SMH-4 STORM MANHOLE)
- PROPOSED PIPE OUTLET PROTECTION
- EXISTING GAS LINE
- EXISTING GAS VALVE OR METER
- EXISTING PROPANE TANK
- PROPOSED DRIVEWAY
- PROPOSED RETAINING WALL
- PROPOSED LOT NUMBER
- PROPOSED LIGHT
- LEVEL SPREADER OR INFILTRATION TRENCH (SEE PLAN)

NO.	DATE	REVISION
3	12-21-21	REVISED PER N. LEB. TWP., LEB. CNTY. ENG. & THE REVISED WALL DESIGN
2	9-29-21	REVISED PER SEWER AUTH, N. LEB. TWP., LEB. CNTY. ENG. & THE REVISED WALL DESIGN
1	6-18-21	REVISED PER LCCD, DEP, SEWER AUTH., N. LEB. TWP., & LCPD

FOR PIONEER MANAGEMENT BY:

SURV. CHIEF: FIELDBOOK NO.

DRAWN BY: JDB/MLS CHKD BY: JCH

MANAGER: JAMES C. HENKE

DESIGN BY: JDB/KWG CHKD BY: JDB/JCH

DRAWING REFERENCE: F:\18\18-2000-01\CAD\Other Plan\Utility.dwg

XREFS:
Ttb (F:\18\18-2000-01\CAD\Final Plan\Ttb-Mark.ttb.dwg)
Key Map (F:\18\18-2000-01\CAD\Final Plan\Key Map.dwg)
Proj Bdy (F:\18\18-2000-01\CAD\Final Plan\Proj Bdy-Lot Layout Adjustments.dwg)
Topo (F:\18\18-2000-01\CAD\Final Plan\Topo-Mark.dwg)
XSP-Surveyfloor (F:\18\18-2000-01\CAD\Final Plan\XSP-Surveyfloor.dwg)

CLIENT
MR. S. GERALD MUSSER
144 BELL ROAD
PALMYRA, PA 17078
(717) 821-1129

SCALE
0 25' 50' 100' 150'
1" = 50'

PIONEER
Management, LLC
111 Millersville Road, Lancaster, PA 17603
Phone: (717) 461-4955 Fax: (717) 461-4955
Email: jb@pioneermanagementllc.com
Website: www.pioneermanagementllc.com

UTILITY PLAN

FOR THE
FINAL SUBDIVISION AND LAND
DEVELOPMENT PLAN OF

MAPLEDALE ESTATES

NORTH LEBANON TOWNSHIP LEBANON COUNTY, PA

DATE: FEB. 25, 2021

SHEET NO. 14 OF 36

DWG. NO. 18-2000-01-B

SEE SHEET 14
MATCHLINE

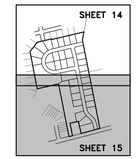

KEY MAP
SCALE: 1"=1000'

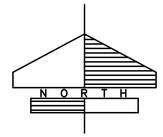

NOTES

1. SUMP PUMP DISCHARGE AND GROUNDWATER ENCOUNTERED DURING CONSTRUCTION SHALL BE DIRECTED TO THE WETLANDS AND NOT INTO THE BMPS.
2. WATER MAIN SHALL BE INSULATED AT ALL CROSSINGS WITH THE STORM SEWER PIPING.
3. BASE DRAIN SHALL NOT CONNECT TO ANY UTILITIES.

UTILITIES:
1. WATER MAIN SHALL BE INSULATED AT ALL CROSSINGS WITH THE STORM SEWER PIPING.
2. BASE DRAIN SHALL NOT CONNECT TO ANY INLET.

LEGEND

- EXISTING PROPERTY BOUNDARY
- EXISTING WETLAND BOUNDARY LINE
- EXISTING ADJOINER LINE
- PROPOSED LOT LINE
- EXISTING LOT MARKER
- PROPOSED LOT MARKER
- EXISTING CENTERLINE
- PROPOSED CENTERLINE
- EXISTING EDGE OF CARTWAY
- PROPOSED EDGE OF PAVEMENT/CURB
- EXISTING RIGHT-OF-WAY LINE
- PROPOSED RIGHT-OF-WAY LINE
- EXISTING EASEMENT LINE
- PROPOSED EASEMENT LINE
- EXISTING FENCE
- PROPOSED FENCE
- EXISTING SIGN
- BENCHMARK
- EXISTING TREELINE / BRUSHLINE
- EXISTING VEGETATION
- PROPOSED STREET TREE
- EXISTING UTILITY POLE W/ GUY WIRE
- EXISTING OVERHEAD ELECTRIC
- EXISTING ELECTRIC BOX
- EXISTING CABLE BOX
- EXISTING TELEPHONE BOX
- EXISTING LIGHT
- PROPOSED STREET LIGHT
- EXISTING WELL
- EXISTING WATERLINE
- EXISTING WATER VALVE
- EXISTING FIRE HYDRANT
- PROPOSED WATERLINE
- PROPOSED WATER VALVE
- PROPOSED FIRE HYDRANT
- PROPOSED WATERLINE LATERAL
- EXISTING SANITARY SEWER MANHOLE
- EXISTING GRAVITY SANITARY SEWER
- EXISTING SANITARY SEWER CLEAN OUT
- PROPOSED SANITARY SEWER MANHOLE
- PROPOSED SANITARY SEWER MANHOLE LABEL
- PROPOSED SANITARY SEWER LINE
- PROPOSED SANITARY SEWER LATERAL
- EXISTING STORM PIPE
- EXISTING STORM MANHOLE
- EXISTING STORM INLET
- PROPOSED STORM PIPE
- PROPOSED BASEDRAIN
- PROPOSED STORM INLET
- PROPOSED STORM HEADWALL/ENDWALL
- PROPOSED STORM MANHOLE
- PROPOSED STORM STRUCTURE LABEL (INLET / ENDWALL/ HEADWALL / STORM MANHOLE)
- PROPOSED PIPE OUTLET PROTECTION
- EXISTING GAS LINE
- EXISTING GAS VALVE OR METER
- EXISTING PROPANE TANK
- PROPOSED DRIVEWAY
- PROPOSED RETAINING WALL
- PROPOSED LOT NUMBER
- PROPOSED LIGHT
- LEVEL SPREADER OR INFILTRATION TRENCH (SEE PLAN)

NO.	DATE	REVISION
3	12-21-21	REVISED PER N. LEB. TWP., LEB. CNTY. ENG. & THE REVISED WALL DESIGN
2	9-29-21	REVISED PER SEWER AUTH., N. LEB. TWP., LEB. CNTY. ENG. & THE REVISED WALL DESIGN
1	6-18-21	REVISED PER LCCD, DEP, SEWER AUTH., N. LEB. TWP., & LCPD

MANAGER: JAMES C. HENKE
DESIGN BY: JDB/KWG | CHKD BY: JDB/JCH
SURV. CHIEF: | FIELDBOOK NO. | DRAWN BY: JDB/MLS | CHKD BY: JCH
FOR PIONEER MANAGEMENT BY:

DRAWING REFERENCE:
F:\18\18-2000-01\CAD\Plot Plan\Utility.dwg

XREFS:
Ref [F:\18\18-2000-01\CAD\Plot Plan\18-2000-01-Base.dwg]
Ref [F:\18\18-2000-01\CAD\Plot Plan\18-2000-01-Proposed Improvements.dwg]
Ref [F:\18\18-2000-01\CAD\Plot Plan\18-2000-01-Layout Alignments.dwg]
XREF-Surveyfloor [F:\18\18-2000-01\CAD\Plot Plan\XREFs\18-2000-01-Surveyfloor.dwg]

CLIENT
MR. S. GERALD MUSSER
144 BELL ROAD
PALMYRA, PA 17078
(717) 821-1129

SCALE
1" = 50'
0 25' 50' 100' 150'

PIONEER
Management, LLC
711 Millersville Road, Lancaster, PA 17603
Phone: (717) 481-4955 Fax: (717) 481-4955
Email: JDB@pioneermanagementllc.com
Website: www.pioneermanagementllc.com

UTILITY PLAN
FOR THE
FINAL SUBDIVISION AND LAND
DEVELOPMENT PLAN OF
MAPLEDALE ESTATES
NORTH LEBANON TOWNSHIP LEBANON COUNTY, PA

DATE: FEB. 25, 2021
SHEET NO. 15 OF 36
DWG. NO. 18-2000-01-B

F:\18\18-2000-01\CAD\Final Plan\Storm.dwg, 24 POST CONSTRUCTION STORMWATER MANAGEMENT PLAN, 12/21/2021 1:46:31 PM, 1:1

SUMMARY OF INFILTROMETER TESTING

LOT/ TRENCH NUMBER	TEST/ PROBE NUMBER	EXISTING GRADE ELEV.	DEPTH TO BOTTOM OF TEST (IN.)	TEST ELEV.	MEASURED RATE (IN/HR)	DESIGN RATE (IN/HR)
1	1	609.8	44	606.13	0.50	0.250
1	2	609.1	38	605.95	6.75	3.375
2	3	606.3	32	603.60	0.50	0.250
3	4	603.9	NO TEST	---	---	---
4	5	604.8	12	603.84	0.75	0.375
5	6	606.3	NO TEST	---	---	---
6	7	606.0	10	605.19	1.25	0.625
7	8	612.1	NO TEST	---	---	---
8	9	618.4	NO TEST	---	---	---
9	10	622.2	48	618.17	0.25	0.125
10	11	627.4	57	622.61	0.75	0.375
11	12	632.9	62	627.74	1.75	0.875
12	13	635.3	33	632.54	0.25	0.125
13	14	632.6	40	629.29	2.00	1.000
14	15	630.1	50	625.89	0.25	0.125
15	16	627.1	50	622.93	0.25	0.125
16	17	624.6	45	620.89	0.25	0.125
17	18	623.3	72	617.28	2.75	1.375
18	19	619.2	64	613.82	3.25	1.625
19	20	612.5	45	608.79	4.75	2.375
20	21	608.6	40	605.23	4.25	2.125
21	22	606.1	25	603.97	0.75	0.375
21	23	601.0	48	597.00	1.25	0.625
21	24	605.0	NO TEST	---	---	---
21	25	601.7	NO TEST	---	---	---
26	26	610.9	22	609.04	1.75	0.875
25	27	611.7	NO TEST	---	---	---
24	28	617.7	NO TEST	---	---	---
27	29	617.0	NO TEST	---	---	---
28	30	618.7	NO TEST	---	---	---
23	31	620.5	NO TEST	---	---	---
22	32	623.6	63	618.33	3.00	1.500
29	33	621.3	NO TEST	---	---	---
30	34	606.8	12	605.76	2.50	1.250
31	35	603.7	9	602.93	3.50	1.750
32	36	598.8	NO TEST	---	---	---
33	37	598.1	NO TEST	---	---	---
34	38	599.5	NO TEST	---	---	---
35	39	603.3	16	601.96	2.25	1.125
36	40	607.1	53	602.63	1.50	0.750
38	41	608.3	36	605.34	1.00	0.500
35	42	598.8	NO TEST	---	---	---
35	43	606.6	NO TEST	---	---	---

NOTE: DESIGN RATE = MEASURED RATE/SAFETY FACTOR OF 2

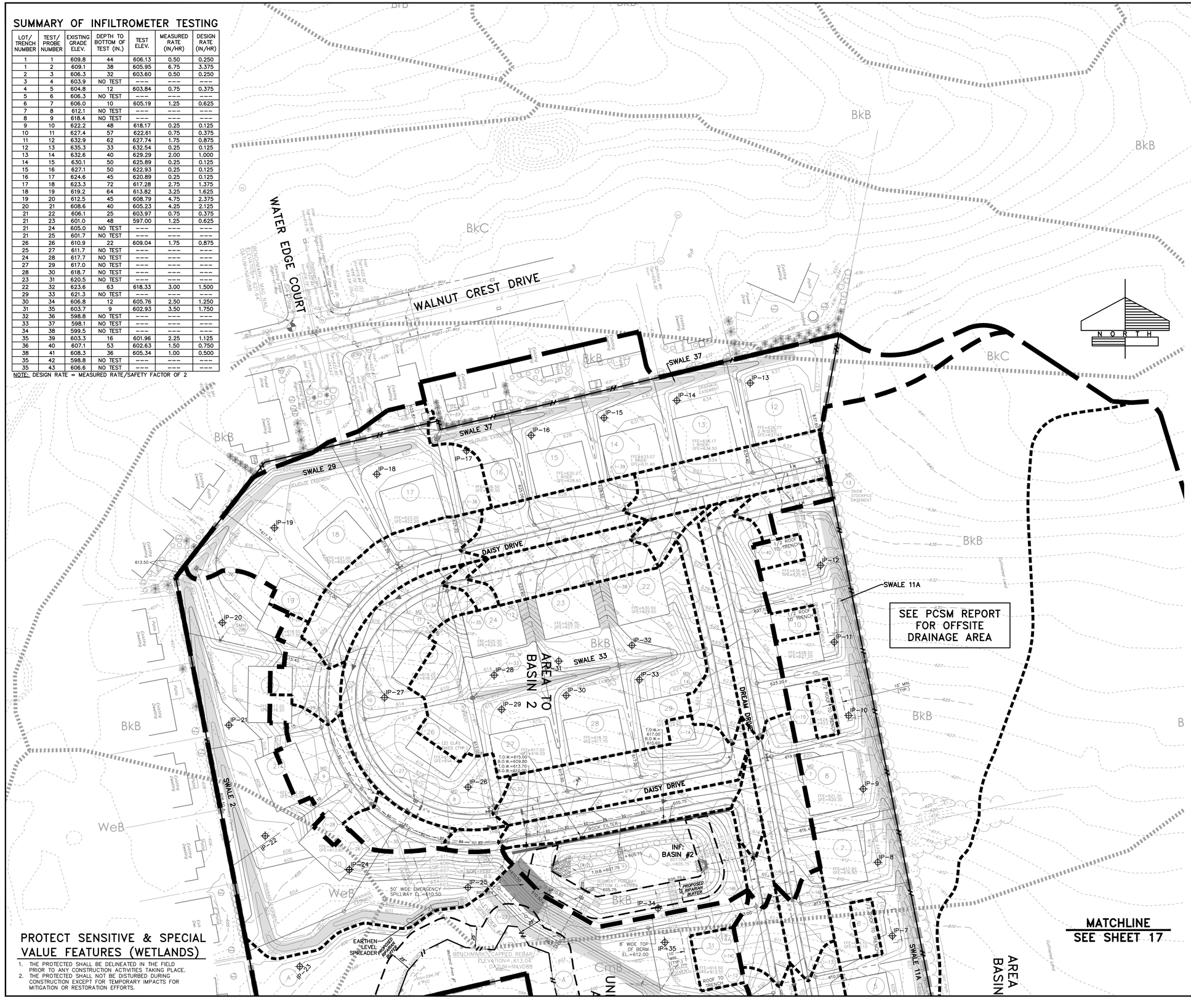

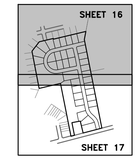

KEY MAP
SCALE: 1"=1000'

NOTE

SUMP PUMP DISCHARGE AND GROUNDWATER ENCOUNTERED DURING CONSTRUCTION SHALL BE DIRECTED TO THE WETLANDS AND NOT INTO THE BMPS.

LEGEND

- EXISTING PROPERTY BOUNDARY
- EXISTING WETLAND BOUNDARY LINE
- EXISTING ADJOINER LINE
- PROPOSED LOT LINE
- EXISTING LOT MARKER
- EXISTING CENTERLINE
- PROPOSED CENTERLINE
- EXISTING EDGE OF CARTWAY
- PROPOSED EDGE OF PAVEMENT/CURB
- EXISTING RIGHT-OF-WAY LINE
- PROPOSED RIGHT-OF-WAY LINE
- EXISTING EASEMENT LINE
- PROPOSED EASEMENT LINE
- EXISTING FENCE
- PROPOSED FENCE
- EXISTING CONTOUR LINE (5.50)
- PROPOSED CONTOUR LINE (5.50)
- PROPOSED SPOT ELEVATION (+ 383.50)
- PROPOSED FINISHED FLOOR ELEVATION (FFE=405.19)
- PROPOSED GARAGE FINISHED FLOOR ELEVATION (GFE=403.52)
- EXISTING SIGN
- BENCHMARK
- EXISTING TREELINE / BRUSHLINE
- EXISTING VEGETATION
- PROPOSED STREET TREE
- EXISTING UTILITY POLE W/ GUY WIRE
- EXISTING OVERHEAD ELECTRIC (OH)
- EXISTING ELECTRIC BOX
- EXISTING CABLE BOX
- EXISTING TELEPHONE BOX
- EXISTING LIGHT
- EXISTING WELL
- EXISTING WATERLINE
- EXISTING WATER VALVE
- EXISTING FIRE HYDRANT
- PROPOSED WATERLINE (8" W)
- PROPOSED WATER VALVE
- PROPOSED FIRE HYDRANT
- EXISTING SANITARY SEWER MANHOLE
- EXISTING GRAVITY SANITARY SEWER
- EXISTING SANITARY SEWER CLEAN OUT
- PROPOSED SANITARY SEWER MANHOLE
- PROPOSED SANITARY SEWER MANHOLE LABEL (MH 40)
- PROPOSED SANITARY SEWER LINE
- PROPOSED CONCRETE ENCASEMENT
- EXISTING STORM PIPE (18" RCP)
- EXISTING STORM MANHOLE
- EXISTING STORM INLET
- PROPOSED BASE DRAIN (BD)
- PROPOSED STORM PIPE
- PROPOSED STORM INLET
- PROPOSED STORM HEADWALL/ENDWALL
- PROPOSED STORM MANHOLE
- PROPOSED STORM STRUCTURE LABEL (I-9 INLET, EW-1 ENDWALL/ HEADWALL, SMH-1 STORM MANHOLE)
- PROPOSED THRUST BLOCK
- PROPOSED PIPE OUTLET PROTECTION
- EXISTING GAS LINE
- EXISTING GAS VALVE OR METER (GV)
- EXISTING PROPANE TANK
- PROPOSED RETAINING WALL
- PROPOSED LOT NUMBER (2)
- PROPOSED NORTH AMERICAN GREEN S75 LINING
- PROPOSED NORTH AMERICAN GREEN P300 (P550 WHERE NOTED)
- POST-DEV. DRAINAGE DIVIDE TO BASIN
- DRAINAGE DIVIDE TO INLET/SWALE
- TIME OF CONCENTRATION PATH
- PRE-DEV. DRAINAGE DIVIDE
- NPDES PERMIT BOUNDARY
- LIMIT OF DISTURBANCE
- INFILTROMETER TEST & PROBE (IP-8)
- LEVEL SPREADER OR INFILTRATION TRENCH (SEE PLAN)

ON-SITE SOIL CLASSIFICATIONS

- BkB - BERKS CHANNERY SILT LOAM, 3% TO 8% SLOPES
- BkC - BERKS CHANNERY SILT LOAM, 8% TO 15% SLOPES
- CmB - COMLY SILT LOAM, 3% TO 8% SLOPES
- WeB - WEIKERT CHANNERY SILT LOAM, 3% TO 8% SLOPES
- SOIL BOUNDARY

NO.	DATE	REVISION
3	12-21-21	REVISED PER N. LEB. TWP., LEB. CNTY. ENG. & THE REVISED WALL DESIGN
2	9-29-21	REVISED PER SEWER AUTH, N. LEB. TWP., LEB. CNTY. ENG. & THE REVISED WALL DESIGN
1	6-18-21	REVISED PER LCCD, DEP, SEWER AUTH., N. LEB. TWP., & LCPD

FOR PIONEER MANAGEMENT BY:

SURV. CHIEF: | FIELDBOOK NO.

MANAGER: JAMES C. HENKE

DESIGN BY: JDB/KWG | CHKD BY: JDB/JCH | DRAWN BY: JDB/MLS | CHKD BY: JCH

DRAWING REFERENCE: F:\18\18-2000-01\CAD\Final Plan\Storm.dwg

XREFS:
Ref. F:\18\18-2000-01\CAD\Final Plan\X-Mast.dwg
Ref. F:\18\18-2000-01\CAD\Final Plan\X-Base.dwg
Ref. F:\18\18-2000-01\CAD\Final Plan\X-Boundary.dwg
Ref. F:\18\18-2000-01\CAD\Final Plan\X-Surroundings.dwg
Sheet Alignments: [F:\18\18-2000-01\CAD\Final Plan\LDS-Roads\Sheet Alignments.dwg]

CLIENT
MR. S. GERALD MUSSER
144 BELL ROAD
PALMYRA, PA 17078
(717) 821-1129

SCALE
0 25' 50' 100' 150'
1" = 50'

PIONEER Management, LLC
111 Millersville Road, Lancaster, PA 17603
Phone: (717) 715-1396 Fax: (717) 481-4955
Email: JB@pioneermanagementllc.com
Website: www.pioneermanagementllc.com

POST CONSTRUCTION STORMWATER MANAGEMENT PLAN
FOR THE
FINAL SUBDIVISION AND LAND DEVELOPMENT PLAN OF
MAPLEDALE ESTATES
NORTH LEBANON TOWNSHIP LEBANON COUNTY, PA

DATE: FEB. 25, 2021
SHEET NO. 16 OF 36
DWG. NO. 18-2000-01-8

F:\18\18-2000-01\CAD\Final Plan\Storm.dwg, 17 POST CONSTRUCTION STORMWATER MANAGEMENT PLAN, 12/21/2021 1:46:37 PM, 1:1



NOTE

SUMP PUMP DISCHARGE AND GROUNDWATER ENCOUNTERED DURING CONSTRUCTION SHALL BE DIRECTED TO THE WETLANDS AND NOT INTO THE BMPS.

LEGEND

- EXISTING PROPERTY BOUNDARY
- EXISTING WETLAND BOUNDARY LINE
- EXISTING ADJOINER LINE
- PROPOSED LOT LINE
- EXISTING LOT MARKER
- EXISTING CENTERLINE
- PROPOSED CENTERLINE
- EXISTING EDGE OF CARTWAY
- PROPOSED EDGE OF PAVEMENT/CURB
- EXISTING RIGHT-OF-WAY LINE
- PROPOSED RIGHT-OF-WAY LINE
- EXISTING EASEMENT LINE
- PROPOSED EASEMENT LINE
- EXISTING FENCE
- PROPOSED FENCE
- EXISTING CONTOUR LINE (530)
- PROPOSED CONTOUR LINE (530)
- PROPOSED SPOT ELEVATION (+383.50)
- PROPOSED FINISHED FLOOR ELEVATION (FFE=405.19)
- PROPOSED GARAGE FINISHED FLOOR ELEVATION (GFE=403.52)
- EXISTING SIGN
- BENCHMARK
- EXISTING TREELINE / BRUSHLINE
- EXISTING VEGETATION
- PROPOSED STREET TREE
- EXISTING UTILITY POLE W/ GUY WIRE
- EXISTING OVERHEAD ELECTRIC (OH)
- EXISTING ELECTRIC BOX
- EXISTING CABLE BOX
- EXISTING TELEPHONE BOX
- EXISTING LIGHT
- EXISTING WELL
- EXISTING WATERLINE
- EXISTING WATER VALVE
- EXISTING FIRE HYDRANT
- PROPOSED WATERLINE (8" W)
- PROPOSED WATER VALVE
- PROPOSED FIRE HYDRANT
- EXISTING SANITARY SEWER MANHOLE
- EXISTING GRAVITY SANITARY SEWER (S)
- EXISTING SANITARY SEWER CLEAN OUT
- PROPOSED SANITARY SEWER MANHOLE
- PROPOSED SANITARY SEWER MANHOLE LABEL (MH 40)
- PROPOSED SANITARY SEWER LINE
- PROPOSED CONCRETE ENCASEMENT
- EXISTING STORM PIPE (18"-30")
- EXISTING STORM MANHOLE
- EXISTING STORM INLET
- PROPOSED BASE DRAIN (BD)
- PROPOSED STORM PIPE
- PROPOSED STORM INLET
- PROPOSED STORM HEADWALL/ENDWALL
- PROPOSED STORM MANHOLE
- PROPOSED STORM STRUCTURE LABEL (I-9 INLET; EW-7 ENDWALL/ HEADWALL; SMH-15 STORM MANHOLE)
- PROPOSED THRUST BLOCK
- PROPOSED PIPE OUTLET PROTECTION
- EXISTING GAS LINE
- EXISTING GAS VALVE OR METER
- EXISTING PROPANE TANK
- PROPOSED RETAINING WALL
- PROPOSED LOT NUMBER (2)
- PROPOSED NORTH AMERICAN GREEN S75 LINING
- PROPOSED NORTH AMERICAN GREEN P300 (P550 WHERE NOTED)
- POST-DEV. DRAINAGE DIVIDE TO BASIN
- DRAINAGE DIVIDE TO INLET/SWALE
- TIME OF CONCENTRATION PATH
- PRE-DEV. DRAINAGE DIVIDE
- NPDES PERMIT BOUNDARY
- LIMIT OF DISTURBANCE
- INFILTROMETER TEST & PROBE (IP-8)
- LEVEL SPREADER OR INFILTRATION TRENCH (SEE PLAN)
- SOIL BOUNDARY

ON-SITE SOIL CLASSIFICATIONS

- BkB - BERKS CHANNERY SILT LOAM, 3% TO 8% SLOPES
- BkC - BERKS CHANNERY SILT LOAM, 8% TO 15% SLOPES
- CmB - COMLY SILT LOAM, 3% TO 8% SLOPES
- WeB - WEIKERT CHANNERY SILT LOAM, 3% TO 8% SLOPES

NO.	DATE	REVISION
3	12-21-21	REVISED PER N. LEB. TWP., LEB. CNTY. ENG. & THE REVISED WALL DESIGN
2	9-29-21	REVISED PER SEWER AUTH, N. LEB. TWP., LEB. CNTY. ENG. & THE REVISED WALL DESIGN
1	6-18-21	REVISED PER LCCD, DEP, SEWER AUTH., N. LEB. TWP., & LCPD

MANAGER: JAMES C. HENKE
DESIGN BY: JDB/KWG
CHKD BY: JDB/JCH
SURV. CHIEF:
FIELDBOOK NO.
DRAWN BY: JDB/MLS
CHKD BY: JCH
FOR PIONEER MANAGEMENT BY:

DRAWING REFERENCE:
F:\18\18-2000-01\CAD\Final Plan\Storm.dwg

XREFS:
Xrefs: F:\18\18-2000-01\CAD\Final Plan\C-Base.dwg
Plan Sheets: F:\18\18-2000-01\CAD\Final Plan\C-Base.dwg, Xrefs.dwg
Profiles: F:\18\18-2000-01\CAD\Final Plan\C-Base.dwg, Xrefs.dwg, Profiles.dwg
Site Amenities: F:\18\18-2000-01\CAD\Final Plan\C-Base.dwg, Xrefs.dwg, Site Amenities.dwg
Street Alignments: F:\18\18-2000-01\CAD\Final Plan\C-Base.dwg, Xrefs.dwg, Street Alignments.dwg

CLIENT
MR. S. GERALD MUSSER
144 BELL ROAD
PALMYRA, PA 17078
(717) 821-1129

SCALE
1" = 50'
0 25' 50' 100' 150'

PIONEER Management, LLC
111 Millersville Road, Lancaster, PA 17603
Phone: 717-481-4955 Fax: 717-481-4955
Email: jb@pioneermanagementllc.com
Website: www.pioneermanagementllc.com

POST CONSTRUCTION STORMWATER MANAGEMENT PLAN
FOR THE
FINAL SUBDIVISION AND LAND DEVELOPMENT PLAN OF
MAPLEDALE ESTATES
NORTH LEBANON TOWNSHIP LEBANON COUNTY, PA

DATE: FEB. 25, 2021
SHEET NO. 17 OF 36
DWG. NO. 18-2000-01-B

P:\18\18-2000-01\CAD\Final Plan\Soil Amendment.dwg, 18 SOIL AMENDMENT PLAN, 12/21/2021 1:46:59 PM, 1:1

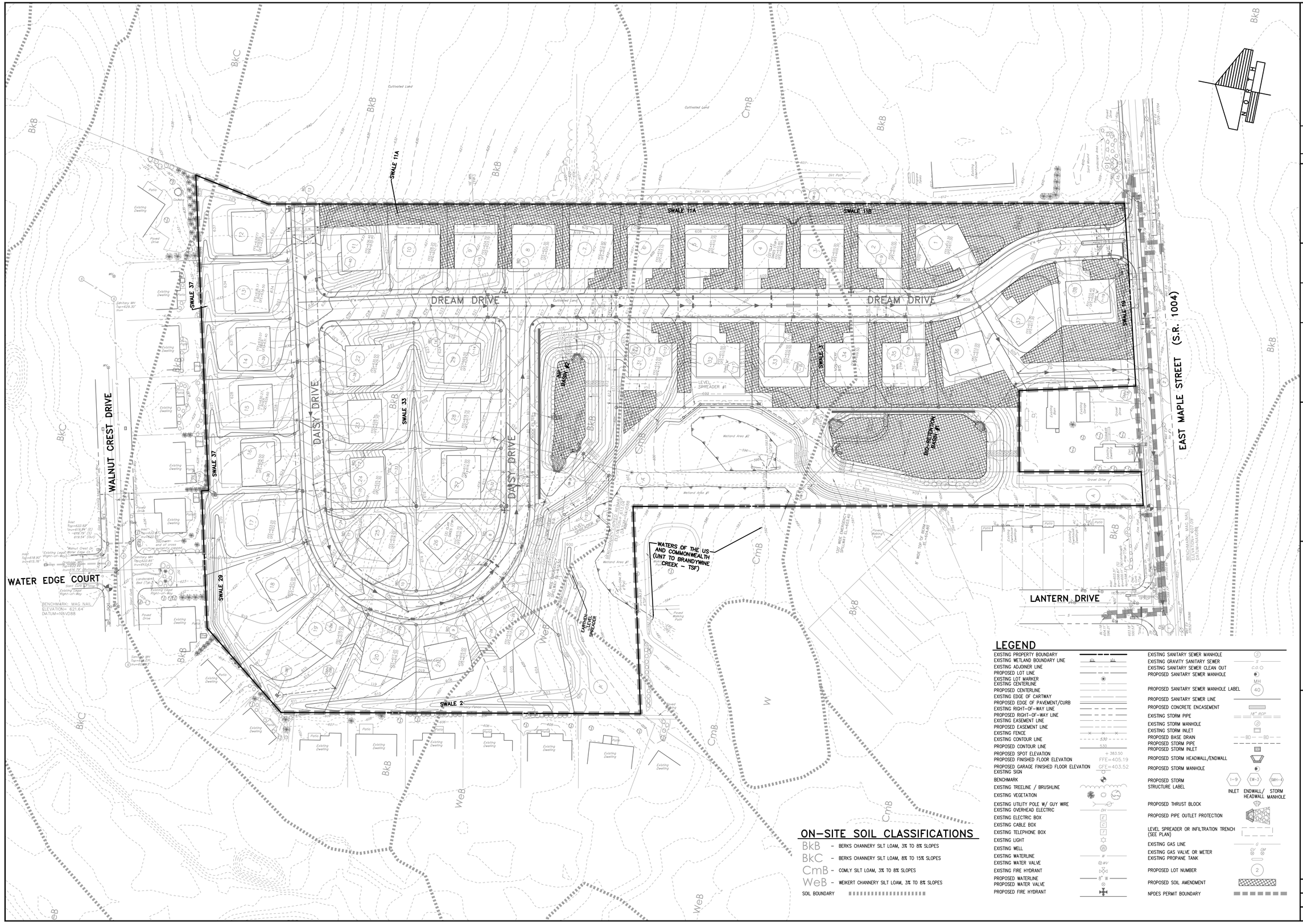

ON-SITE SOIL CLASSIFICATIONS

- BkB – BERKS CHANNERY SILT LOAM, 3% TO 8% SLOPES
- BkC – BERKS CHANNERY SILT LOAM, 8% TO 15% SLOPES
- CmB – COMLY SILT LOAM, 3% TO 8% SLOPES
- WeB – WEIKERT CHANNERY SILT LOAM, 3% TO 8% SLOPES

SOIL BOUNDARY

LEGEND

EXISTING PROPERTY BOUNDARY
EXISTING WETLAND BOUNDARY LINE
EXISTING ADJOINER LINE
PROPOSED LOT LINE
EXISTING LOT MARKER
EXISTING CENTERLINE
PROPOSED CENTERLINE
EXISTING EDGE OF CARTWAY
PROPOSED EDGE OF PAVEMENT/CURB
EXISTING RIGHT-OF-WAY LINE
PROPOSED RIGHT-OF-WAY LINE
EXISTING EASEMENT LINE
PROPOSED EASEMENT LINE
EXISTING FENCE
EXISTING CONTOUR LINE
PROPOSED CONTOUR LINE
PROPOSED SPOT ELEVATION
PROPOSED FINISHED FLOOR ELEVATION
PROPOSED GARAGE FINISHED FLOOR ELEVATION
EXISTING SIGN
BENCHMARK
EXISTING TREELINE / BRUSHLINE
EXISTING VEGETATION
EXISTING UTILITY POLE W/ GUY WIRE
EXISTING OVERHEAD ELECTRIC
EXISTING ELECTRIC BOX
EXISTING CABLE BOX
EXISTING TELEPHONE BOX
EXISTING LIGHT
EXISTING WELL
EXISTING WATERLINE
EXISTING WATER VALVE
EXISTING FIRE HYDRANT
PROPOSED WATERLINE
PROPOSED WATER VALVE
PROPOSED FIRE HYDRANT

EXISTING SANITARY SEWER MANHOLE
EXISTING GRAVITY SANITARY SEWER
EXISTING SANITARY SEWER CLEAN OUT
PROPOSED SANITARY SEWER MANHOLE
PROPOSED SANITARY SEWER MANHOLE LABEL
PROPOSED SANITARY SEWER LINE
PROPOSED CONCRETE ENCASEMENT
EXISTING STORM PIPE
EXISTING STORM MANHOLE
EXISTING STORM INLET
PROPOSED BASE DRAIN
PROPOSED STORM PIPE
PROPOSED STORM INLET
PROPOSED STORM HEADWALL/ENDWALL
PROPOSED STORM MANHOLE
PROPOSED STORM STRUCTURE LABEL (I-9 INLET, EW-3 ENDWALL/HEADWALL, SMH-4 STORM MANHOLE)
PROPOSED THRUST BLOCK
PROPOSED PIPE OUTLET PROTECTION
LEVEL SPREADER OR INFILTRATION TRENCH (SEE PLAN)
EXISTING GAS LINE
EXISTING GAS VALVE OR METER
EXISTING PROPANE TANK
PROPOSED LOT NUMBER
PROPOSED SOIL AMENDMENT
NPDES PERMIT BOUNDARY

NO.	DATE	REVISION
3	12-21-21	REVISED PER N. LEB. TWP., LEB. CNTY. ENG. & THE REVISED WALL DESIGN
2	9-29-21	REVISED PER SEWER AUTH, N. LEB. TWP., LEB. CNTY. ENG. & THE REVISED WALL DESIGN
1	6-18-21	REVISED PER LCCD, DEP, SEWER AUTH., N. LEB. TWP., & LCPD

CLIENT
MR. S. GERALD MUSSER
144 BELL ROAD
PALMYRA, PA 17078
(717) 821-1129

MANAGER: JAMES C. HENKE
SURV. CHIEF:
FIELDBOOK NO.
FOR PIONEER MANAGEMENT BY:
DESIGN BY: JDB/KWG
CHKD BY: JDB/JCH
DRAWN BY: JDB/MLS
CHKD BY: JCH
DRAWING REFERENCE: F:\18\18-2000-01\CAD\Final Plan\Soil Amendment.dwg
XREFS:
TB: [F:\18\18-2000-01\CAD\Final Plan\X-Mesh TB.dwg]
Surveyplan: [F:\18\18-2000-01\CAD\Final Plan\X-Survey Plan.dwg]
Base: [F:\18\18-2000-01\CAD\Final Plan\X-Base.dwg]
Final Alignment: [F:\18\18-2000-01\CAD\Final Plan\X-Street Alignments.dwg]

SCALE 1" = 60'
0 30' 60' 120' 180'

PIONEER Management, LLC
111 Millersville Road, Lancaster, PA 17603
Phone: 717-481-4955 Fax: 717-481-4955
Email: info@pioneermanagementllc.com
Website: www.pioneermanagementllc.com

SOIL AMENDMENT PLAN
FOR THE
FINAL SUBDIVISION AND LAND DEVELOPMENT PLAN OF
MAPLEDALE ESTATES
NORTH LEBANON TOWNSHIP LEBANON COUNTY, PA.

DATE: FEB. 25, 2021
SHEET NO. 18 OF 36
DWG. NO. 18-2000-01-B

F:\18\18-2000-01\CAD\Final Plan\ES.dwg, 19 EROSION AND SEDIMENTATION CONTROL PLAN, 12/21/2021 1:46:39 PM, 1:1

NOTES:

1. THESE PLANS INDICATE CRITICAL AREAS FOR EROSION AND SEDIMENT CONTROL PLACEMENT BUT DO NOT RELIEVE THE CONTRACTOR FROM PROVIDING ADDITIONAL CONTROLS AS SITE CONDITIONS WARRANT. THE ENVIRONMENTAL COMPLIANCE MANAGER FOR THE PROJECT AND OR CONSERVATION DISTRICT MAY DIRECT THE CONTRACTOR TO INSTALL E&S BMPS NOT DEPICTED ON THESE DRAWINGS IN ORDER TO PROTECT DOWN GRADIENT AREAS FROM EROSION AND SEDIMENTATION DURING CONSTRUCTION.
2. SUMP PUMP DISCHARGE AND GROUNDWATER ENCOUNTERED DURING CONSTRUCTION SHALL BE DIRECTED TO THE WETLANDS AND NOT INTO THE BMPS.

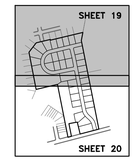

KEY MAP

SCALE: 1"=1000'

WATER EDGE COURT

WALNUT CREST DRIVE

DAISY DRIVE

DREAM DRIVE

SWALE 37

SWALE 29

SWALE 33

SWALE 2

SWALE 11A

DRAINAGE AREA TO SED. TRAP A (4.97 AC.)

DRAINAGE AREA TO SEDIMENT BASIN 1 (WORST CASE) (18.40 AC.)

SEE PCSM REPORT FOR OFFSITE DRAINAGE AREA

SEDIMENT TRAP A
BOTTOM EL=606.50

TEMPORARY SEDIMENT BASIN 2
TEMPORARY BAFFLE
CLEANOUT STAKE
TEMP. SKIMMER IP-34
TEMP. BOTTOM EL=605.25

50' WIDE EMERGENCY SPILLWAY EL.=610.50

8' WIDE TOP OF BERM EL=612.00

TEMPORARY TOPSOIL STOCKPILE

TEMP. BAFFLE

CLEANOUT STAKE

SNOW STOCKPILE EASEMENT

(2) CLAY DIKES (TYP.)

ROCK FILTER

BENCHMARK CAPPED REBAR
ELEVATION=1,613.04
DATUM=NAVD88

12" FILTER SOCK #9

32" FILTER SOCK #1

12" FILTER SOCK #2

32" FILTER SOCK #8

IP-7 IP-8 IP-9 IP-10 IP-11 IP-12 IP-13 IP-14 IP-15 IP-16 IP-17 IP-18 IP-19 IP-20 IP-21 IP-23 IP-24 IP-25 IP-26 IP-27 IP-28 IP-29 IP-30 IP-31 IP-32 IP-33 IP-34 IP-35

MATCHLINE
SEE SHEET 20

PROTECT SENSITIVE & SPECIAL VALUE FEATURES (WETLANDS)

1. THE PROTECTED SHALL BE DELINEATED IN THE FIELD PRIOR TO ANY CONSTRUCTION ACTIVITIES TAKING PLACE.
2. THE PROTECTED SHALL NOT BE DISTURBED DURING CONSTRUCTION EXCEPT FOR TEMPORARY IMPACTS FOR MITIGATION OR RESTORATION EFFORTS.

LEGEND

- EXISTING PROPERTY BOUNDARY
- EXISTING WETLAND BOUNDARY LINE (WL / WL)
- EXISTING ADJOINER LINE
- PROPOSED LOT LINE
- EXISTING LOT MARKER
- EXISTING CENTERLINE
- PROPOSED CENTERLINE
- EXISTING EDGE OF CARTWAY
- PROPOSED EDGE OF PAVEMENT/CURB
- EXISTING RIGHT-OF-WAY LINE
- PROPOSED RIGHT-OF-WAY LINE
- EXISTING EASEMENT LINE
- PROPOSED EASEMENT LINE
- EXISTING FENCE
- PROPOSED FENCE
- EXISTING CONTOUR LINE (530)
- PROPOSED CONTOUR LINE (530)
- PROPOSED SPOT ELEVATION (+ 383.50)
- PROPOSED FINISHED FLOOR ELEVATION (FFE=405.19)
- PROPOSED GARAGE FINISHED FLOOR ELEVATION (GFE=403.52)
- EXISTING SIGN
- BENCHMARK
- EXISTING TREELINE / BRUSHLINE
- EXISTING VEGETATION
- EXISTING UTILITY POLE W/ GUY WIRE
- EXISTING OVERHEAD ELECTRIC (OH)
- EXISTING ELECTRIC BOX (E)
- EXISTING CABLE BOX (C)
- EXISTING TELEPHONE BOX (T)
- EXISTING LIGHT
- EXISTING WELL (W)
- EXISTING WATERLINE (W)
- EXISTING WATER VALVE (WV)
- EXISTING FIRE HYDRANT
- PROPOSED WATERLINE (8" W)
- PROPOSED WATER VALVE
- PROPOSED FIRE HYDRANT
- EXISTING SANITARY SEWER MANHOLE (S)
- EXISTING GRAVITY SANITARY SEWER (S)
- EXISTING SANITARY SEWER CLEAN OUT (CO)
- PROPOSED SANITARY SEWER MANHOLE (MH 40)
- PROPOSED SANITARY SEWER MANHOLE LABEL
- PROPOSED SANITARY SEWER LINE
- PROPOSED CONCRETE ENCASEMENT (18" RCP)
- EXISTING STORM PIPE
- EXISTING STORM MANHOLE (D)
- EXISTING STORM INLET
- PROPOSED STORM PIPE
- PROPOSED STORM INLET
- PROPOSED STORM HEADWALL/ENDWALL
- PROPOSED STORM MANHOLE
- PROPOSED STORM STRUCTURE LABEL (I-9 INLET; EW-3 ENDWALL/HEADWALL; SMH-4 STORM MANHOLE)
- PROPOSED THRUST BLOCK
- PROPOSED PIPE OUTLET PROTECTION
- EXISTING GAS LINE
- EXISTING GAS VALVE OR METER (GV)
- EXISTING PROPANE TANK
- PROPOSED RETAINING WALL
- PROPOSED LOT NUMBER (2)
- PROPOSED NORTH AMERICAN GREEN S75 LINING
- PROPOSED NORTH AMERICAN GREEN P300 (P550 WHERE NOTED)
- NPDES PERMIT BOUNDARY
- LIMIT OF DISTURBANCE
- INFILTROMETER TEST & PROBE (IP-8)
- LEVEL SPREADER OR INFILTRATION TRENCH (SEE PLAN)
- FILTER SOCK (FS)
- CONSTRUCTION ENTRANCE
- ORANGE CONSTRUCTION FENCE
- DRAINAGE DIVIDES TO SEDIMENT BASINS
- DRAINAGE DIVIDE TO SEDIMENT TRAP

ON-SITE SOIL CLASSIFICATIONS

- BkB - BERKS CHANNERY SILT LOAM, 3% TO 8% SLOPES
- BkC - BERKS CHANNERY SILT LOAM, 8% TO 15% SLOPES
- CmB - COMLY SILT LOAM, 3% TO 8% SLOPES
- WeB - WEIKERT CHANNERY SILT LOAM, 3% TO 8% SLOPES
- SOIL BOUNDARY

NO.	DATE	REVISION
3	12-21-21	REVISED PER N. LEB. TWP., LEB. CNTY. ENG. & THE REVISED WALL DESIGN
2	9-29-21	REVISED PER SEWER AUTH, N. LEB. TWP., LEB. CNTY. ENG. & THE REVISED WALL DESIGN
1	6-18-21	REVISED PER LCCD, DEP, SEWER AUTH., N. LEB. TWP., & LCPD

FOR PIONEER MANAGEMENT BY:

FIELDBOOK NO.

CHKD BY: JCH

DRAWN BY: JDB/MLS

SURV. CHIEF:

MANAGER: JAMES C. HENKE

DESIGN BY: JDB/KWG

CHKD BY: JDB/JCH

DRAWING REFERENCE:
F:\18\18-2000-01\CAD\Final Plan\ES.dwg

XREFS:
Ref: [F:\18\18-2000-01\CAD\Final Plan\X-Mark.TB.dwg]
Ref: [F:\18\18-2000-01\CAD\Final Plan\X-Mark_Misc.dwg]
Ref: [F:\18\18-2000-01\CAD\Final Plan\X-Mark_Misc_Surveyfeatures.dwg]
Ref: [F:\18\18-2000-01\CAD\Final Plan\X-Mark_Misc_Surveyfeatures.dwg]
Sheet Alignments: [F:\18\18-2000-01\CAD\Final Plan\LCSC-Roads\Street Alignments.dwg]

CLIENT

MR. S. GERALD MUSSER
144 BELL ROAD
PALMYRA, PA 17078
(717) 821-1129

SCALE
1" = 50'
0 25' 50' 100' 150'

PIONEER Management, LLC
111 Millersville Road, Lancaster, PA 17603
Phone: (717) 715-1396 Fax: (717) 481-4455
Email: jrb@pioneermanagementllc.com
Website: www.pioneermanagementllc.com

EROSION AND SEDIMENTATION CONTROL PLAN
FOR THE
FINAL SUBDIVISION AND LAND DEVELOPMENT PLAN OF
MAPLEDALE ESTATES
NORTH LEBANON TOWNSHIP LEBANON COUNTY, PA

DATE: FEB. 25, 2021

SHEET NO. 19 OF 36

DWG. NO. 18-2000-01-B

P:\18\18-2000-01\CAD\Final Plan\ES.dwg, 20 EROSION AND SEDIMENTATION CONTROL PLAN, 12/21/2021 1:46:45 PM, 1:1

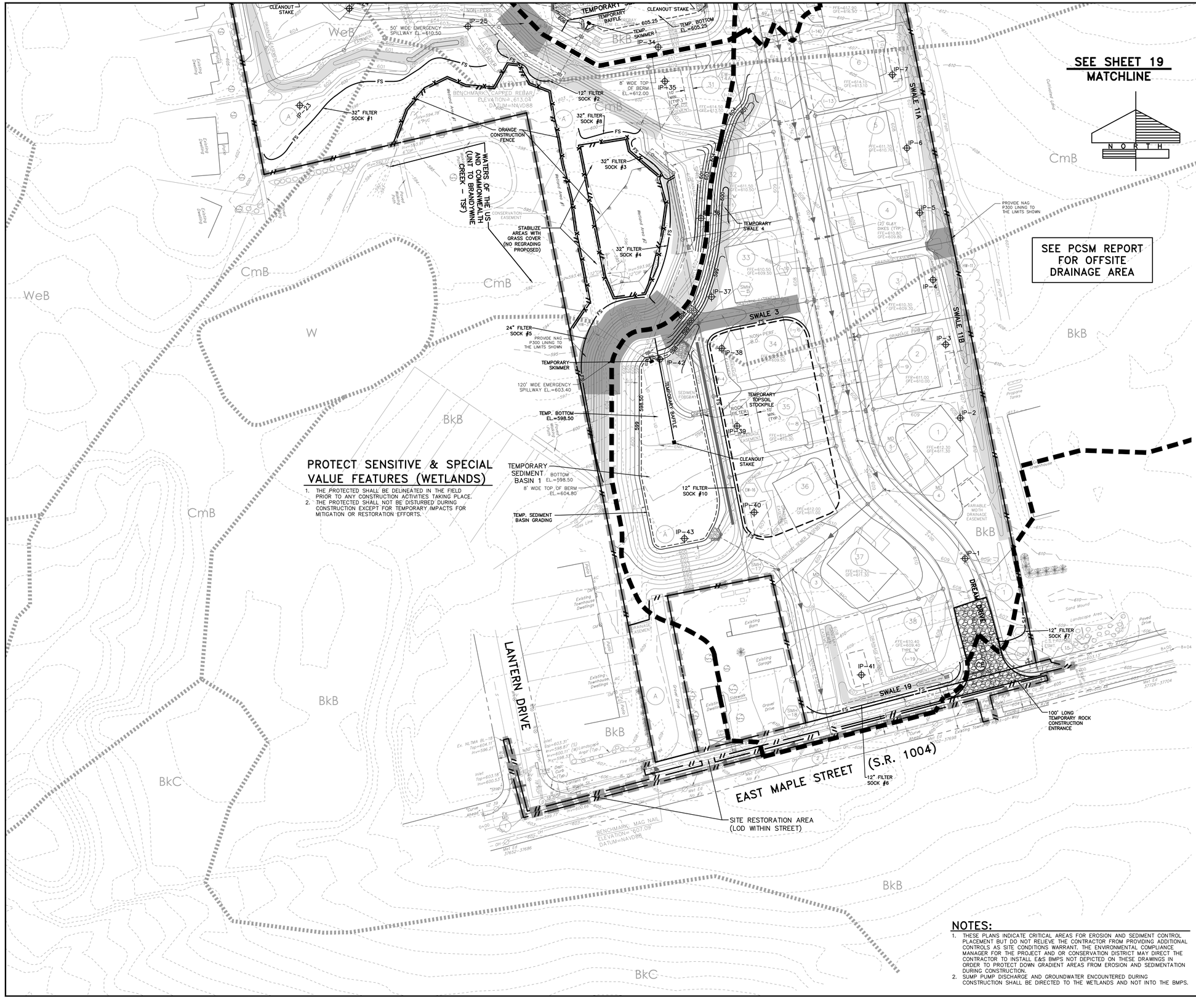

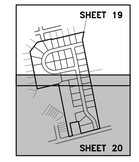

KEY MAP
SCALE: 1"=1000'

LEGEND

- EXISTING PROPERTY BOUNDARY
- EXISTING WETLAND BOUNDARY LINE
- EXISTING ADJOINER LINE
- PROPOSED LOT LINE
- EXISTING LOT MARKER
- EXISTING CENTERLINE
- PROPOSED CENTERLINE
- EXISTING EDGE OF CARTWAY
- PROPOSED EDGE OF PAVEMENT/CURB
- EXISTING RIGHT-OF-WAY LINE
- PROPOSED RIGHT-OF-WAY LINE
- EXISTING EASEMENT LINE
- PROPOSED EASEMENT LINE
- EXISTING FENCE
- PROPOSED FENCE
- EXISTING CONTOUR LINE
- PROPOSED CONTOUR LINE
- PROPOSED SPOT ELEVATION
- PROPOSED FINISHED FLOOR ELEVATION
- PROPOSED GARAGE FINISHED FLOOR ELEVATION
- EXISTING SIGN
- BENCHMARK
- EXISTING TREELINE / BRUSHLINE
- EXISTING VEGETATION
- EXISTING UTILITY POLE W/ GUY WIRE
- EXISTING OVERHEAD ELECTRIC
- EXISTING ELECTRIC BOX
- EXISTING CABLE BOX
- EXISTING TELEPHONE BOX
- EXISTING LIGHT
- EXISTING WELL
- EXISTING WATERLINE
- EXISTING WATER VALVE
- EXISTING FIRE HYDRANT
- PROPOSED WATERLINE
- PROPOSED WATER VALVE
- PROPOSED FIRE HYDRANT
- EXISTING SANITARY SEWER MANHOLE
- EXISTING GRAVITY SANITARY SEWER
- EXISTING SANITARY SEWER CLEAN OUT
- PROPOSED SANITARY SEWER MANHOLE
- PROPOSED SANITARY SEWER MANHOLE LABEL
- PROPOSED SANITARY SEWER LINE
- PROPOSED CONCRETE ENCASEMENT
- EXISTING STORM PIPE
- EXISTING STORM MANHOLE
- EXISTING STORM INLET
- PROPOSED STORM PIPE
- PROPOSED STORM INLET
- PROPOSED STORM HEADWALL/ENDWALL
- PROPOSED STORM MANHOLE
- PROPOSED STORM STRUCTURE LABEL (INLET / ENDWALL/ HEADWALL / STORM MANHOLE)
- PROPOSED THRUST BLOCK
- PROPOSED PIPE OUTLET PROTECTION
- EXISTING GAS LINE
- EXISTING GAS VALVE OR METER
- EXISTING PROPANE TANK
- PROPOSED RETAINING WALL
- PROPOSED LOT NUMBER
- PROPOSED NORTH AMERICAN GREEN S75 LINING
- PROPOSED NORTH AMERICAN GREEN P300 (P550 WHERE NOTED)
- NPDES PERMIT BOUNDARY
- LIMIT OF DISTURBANCE
- INFILTROMETER TEST & PROBE
- LEVEL SPREADER OR INFILTRATION TRENCH (SEE PLAN)
- FILTER SOCK
- CONSTRUCTION ENTRANCE
- ORANGE CONSTRUCTION FENCE
- DRAINAGE DIVIDES TO SEDIMENT BASINS
- DRAINAGE DIVIDE TO SEDIMENT TRAP

ON-SITE SOIL CLASSIFICATIONS

- BkB - BERKS CHANNERY SILT LOAM, 3% TO 8% SLOPES
- BkC - BERKS CHANNERY SILT LOAM, 8% TO 15% SLOPES
- CmB - COMLY SILT LOAM, 3% TO 8% SLOPES
- WeB - WEIKERT CHANNERY SILT LOAM, 3% TO 8% SLOPES
- SOIL BOUNDARY

NOTES:

1. THESE PLANS INDICATE CRITICAL AREAS FOR EROSION AND SEDIMENT CONTROL PLACEMENT BUT DO NOT RELIEVE THE CONTRACTOR FROM PROVIDING ADDITIONAL CONTROLS AS SITE CONDITIONS WARRANT. THE ENVIRONMENTAL COMPLIANCE MANAGER FOR THE PROJECT AND OR CONSERVATION DISTRICT MAY DIRECT THE CONTRACTOR TO INSTALL E&S BMP'S NOT DEPICTED ON THESE DRAWINGS IN ORDER TO PROTECT DOWN GRADIENT AREAS FROM EROSION AND SEDIMENTATION DURING CONSTRUCTION.
2. SUMP PUMP DISCHARGE AND GROUNDWATER ENCOUNTERED DURING CONSTRUCTION SHALL BE DIRECTED TO THE WETLANDS AND NOT INTO THE BMPS.

NO.	DATE	REVISION
3	12-21-21	REVISED PER N. LEB. TWP., LEB. CNTY. ENG. & THE REVISED WALL DESIGN
2	9-29-21	REVISED PER SEWER AUTH., N. LEB. TWP., LEB. CNTY. ENG. & THE REVISED WALL DESIGN
1	6-18-21	REVISED PER LCCD, DEP, SEWER AUTH., N. LEB. TWP., & LCPD

FOR PIONEER MANAGEMENT BY:

MANAGER: JAMES C. HENKE
SURV. CHIEF:
FIELDBOOK NO.
DESIGN BY: JDB/KWG
CHKD BY: JDB/JCH
DRAWN BY: JDB/MLS
CHKD BY: JCH
DRAWING REFERENCE: F:\18\18-2000-01\CAD\Final Plan\ES.dwg
XREFS: Title Block.dwg, Plan Notes.dwg, Profiles.dwg, Details.dwg, Cover Sheet.dwg, Misc.dwg, Pre-Development (1-100).dwg, Post-Development (1-100).dwg, Pre-Swaffers (1-100).dwg, Post-Swaffers (1-100).dwg, Pre-Development (1-100) Surveyfabric.dwg, Sheet Alignments [F:\18\18-2000-01\CAD\Final Plan\LCSD-Roads\Sheet Alignments.dwg]

CLIENT
MR. S. GERALD MUSSER
144 BELL ROAD
PALMYRA, PA 17078
(717) 821-1129

SCALE
1" = 50'
0 25' 50' 100' 150'

PIONEER Management, LLC
111 Millersville Road, Lancaster, PA 17603
Phone: (717) 715-1396 Fax: (717) 481-4955
Email: jh@pioneermanagementllc.com
Website: www.pioneermanagementllc.com

EROSION AND SEDIMENTATION CONTROL PLAN
FOR THE
FINAL SUBDIVISION AND LAND DEVELOPMENT PLAN OF
MAPLEDALE ESTATES
NORTH LEBANON TOWNSHIP LEBANON COUNTY, PA

DATE: FEB. 25, 2021
SHEET NO. 20 OF 36
DWG. NO. 18-2000-01-B

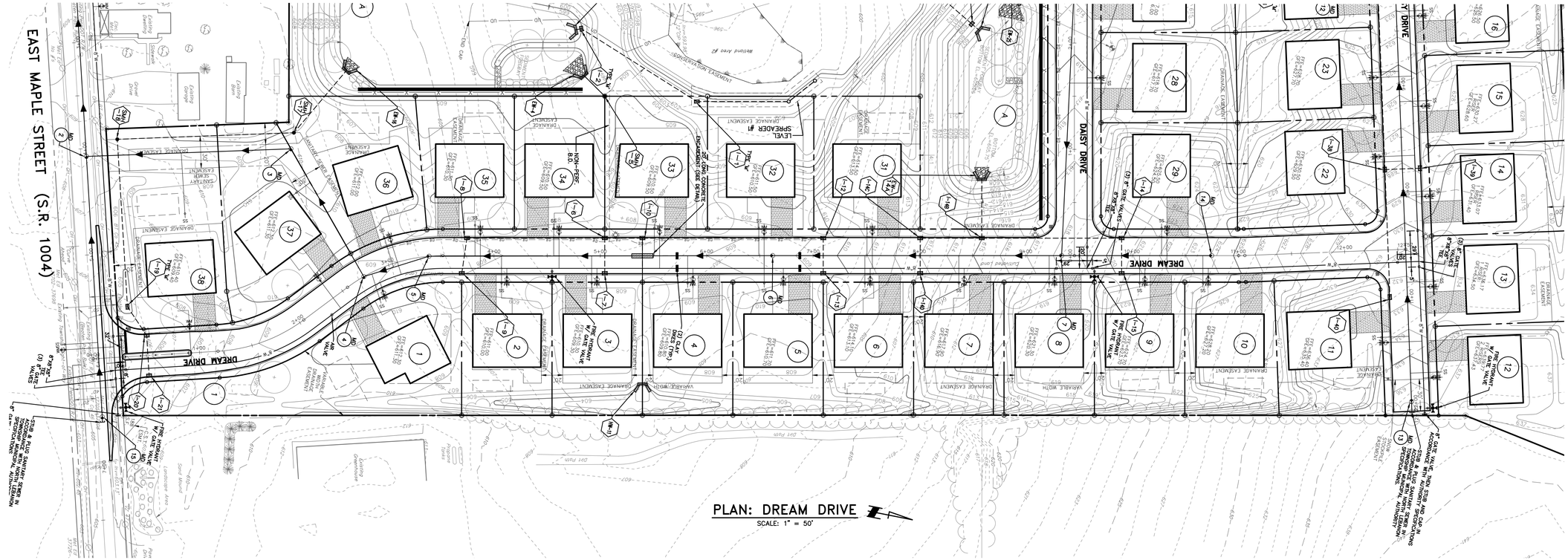

PLAN: DREAM DRIVE

SCALE: 1" = 50'

WATERLINE NOTE

THE MAXIMUM DEPTH TO THE TOP OF THE WATER MAIN IS 7.25'.

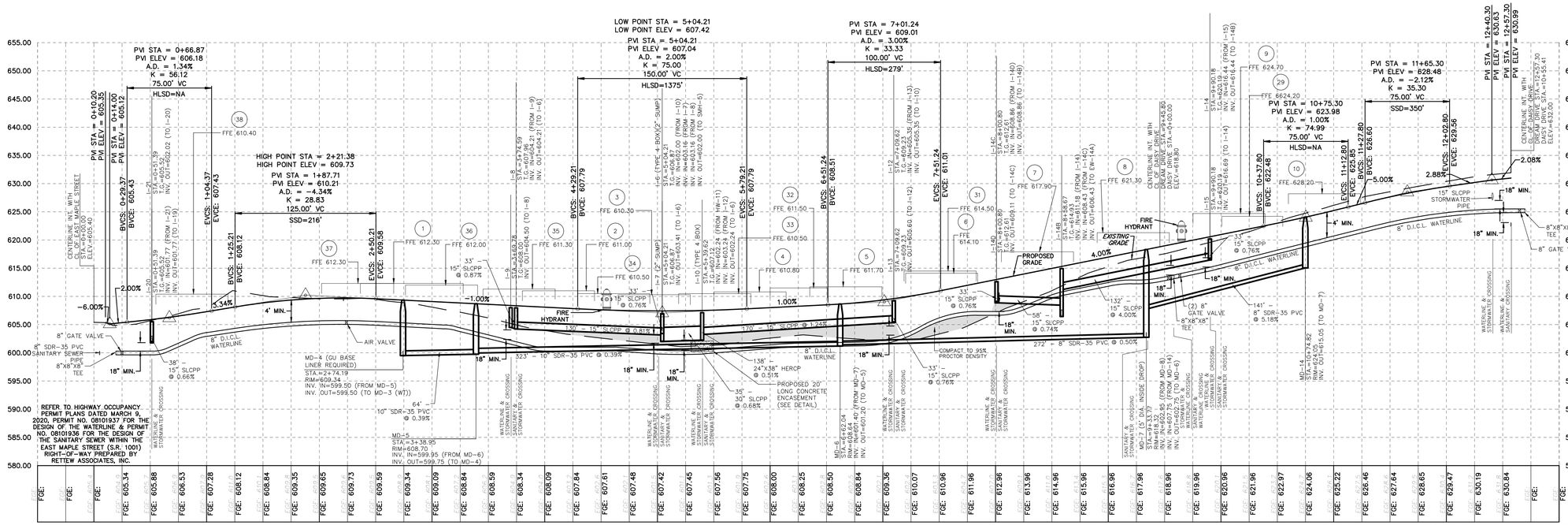
PVI STA = 0+66.87
PVI ELEV = 606.18
A.D. = 1.34%
K = 56.12
75.00' VC
HLSD=NA
PVI STA = 0+10.20
PVI ELEV = 605.35
PVI STA = 0+14.00
PVI ELEV = 605.12
BVCS: 0+29.37
BVCS: 605.43
EVCS: 1+04.37
EVCE: 607.43
BVCS: 1+25.21
BVCE: 608.12
HIGH POINT STA = 2+21.38
HIGH POINT ELEV = 609.73
PVI STA = 1+87.71
PVI ELEV = 610.21
A.D. = -4.34%
K = 28.83
125.00' VC
SSD=216'
EVCS: 2+50.21
EVCE: 609.98
LOW POINT STA = 5+04.21
LOW POINT ELEV = 607.42
PVI STA = 5+04.21
PVI ELEV = 607.04
A.D. = 2.00%
K = 75.00
150.00' VC
HLSD=1375'
BVCS: 4+29.21
BVCE: 607.79
EVCS: 5+79.21
EVCE: 607.79
PVI STA = 7+01.24
PVI ELEV = 609.01
A.D. = 3.00%
K = 33.33
100.00' VC
HLSD=279'
BVCS: 6+51.24
BVCE: 608.51
EVCS: 7+51.24
EVCE: 611.01
PVI STA = 10+75.30
PVI ELEV = 623.98
A.D. = 1.00%
K = 74.99
75.00' VC
HLSD=NA
BVCS: 10+37.80
BVCE: 622.48
EVCS: 11+12.80
EVCE: 623.48
PVI STA = 11+65.30
PVI ELEV = 628.48
A.D. = -2.12%
K = 35.30
75.00' VC
SSD=350'
BVCS: 12+02.80
BVCE: 629.56
PVI STA = 12+40.30
PVI ELEV = 630.83
PVI STA = 12+57.30
PVI ELEV = 629.98
EVCS: 12+27.80
EVCE: 626.60
CENTERLINE INT. WITH GLADE EAST MAPLE STREET ELEV.=605.00
CENTERLINE INT. WITH DAISY DRIVE STA.=0+00.00 ELEV.=618.80
CENTERLINE INT. WITH DREAM DRIVE STA.=0+43.80 DAISY DRIVE STA.=0+00.00 ELEV.=618.80
CENTERLINE INT. WITH DREAM DRIVE STA.=12+57.30 DAISY DRIVE STA.=10+55.41 ELEV.=632.00
FFE 612.30
FFE 612.00
FFE 610.30
FFE 611.00
FFE 610.50
FFE 611.30
FFE 610.80
FFE 611.70
FFE 611.50
FFE 614.50
FFE 614.10
FFE 617.90
FFE 621.30
FFE 624.70
FFE 6624.20
FFE 628.20
FFE 624.90
FFE 626.60
FFE 629.56
FFE 630.19
FFE 630.84
FIRE HYDRANT
PROPOSED GRADE
EXISTING GRADE
4.00%
2.88%
5.00%
2.08%
-6.00%
2.00%
-5.34%
-1.00%
1.00%
4' MIN.
18" MIN.
8" GATE VALVE
8" SDR-35 PVC SANITARY SEWER PIPE
8"X8"X8" TEE
8" D.I.C.L. WATERLINE
AIR VALVE
MD-4 (GU BASE LINER REQUIRED)
STA.=2+74.19
RIM=609.54
INV. IN=599.50 (FROM MD-5)
INV. OUT=599.50 (TO MD-3 (WT))
MD-5
STA.=3+38.95
RIM=608.70
INV. IN=599.95 (FROM MD-6)
INV. OUT=599.75 (TO MD-4)
MD-6
STA.=4+62.04
RIM=608.64
INV. IN=601.40* (FROM MD-7)
INV. OUT=601.20 (TO MD-5)
MD-7
STA.=5+74.82
RIM=610.24
INV. IN=608.05 (FROM MD-8)
INV. OUT=607.85 (TO MD-6)
MD-8
STA.=6+86.85
RIM=618.32
INV. IN=607.95 (FROM MD-8)
INV. IN=607.75 (FROM MD-14)
INV. OUT=607.75 (TO MD-6)
MD-14
STA.=7+74.82
RIM=624.05
INV. OUT=615.05 (TO MD-7)
MD-15
STA.=8+90.18
RIM=618.44 (FROM I-15)
INV. IN=618.44 (FROM I-15)
INV. OUT=616.44 (TO I-14)
I-15
STA.=8+90.18
RIM=618.44 (FROM I-15)
INV. IN=616.69 (FROM I-14)
INV. OUT=616.69 (TO I-14)
I-14
STA.=9+90.18
RIM=618.44 (FROM I-15)
INV. IN=616.94 (FROM I-13)
INV. OUT=616.94 (TO I-13)
I-13
STA.=10+90.18
RIM=618.44 (FROM I-15)
INV. IN=617.18 (FROM I-14)
INV. IN=617.18 (FROM I-12)
INV. OUT=606.43 (TO EW-14)
EW-14
STA.=11+90.18
RIM=618.44 (FROM I-15)
INV. IN=617.43 (FROM I-13)
INV. OUT=606.68 (TO I-13)
I-13
STA.=12+90.18
RIM=618.44 (FROM I-15)
INV. IN=617.68 (FROM I-12)
INV. OUT=606.93 (TO I-12)
I-12
STA.=7+09.62
T.C.=609.23
INV. IN=605.35 (FROM I-13)
INV. OUT=605.35 (TO I-10)
I-10 (TYPE 4 BOX)
STA.=5+39.62
RIM=609.23
INV. IN=602.24 (FROM HW-11)
INV. IN=603.24 (FROM I-12)
INV. OUT=602.24 (TO I-9)
I-9
STA.=4+80.26
T.C.=608.00
INV. OUT=604.50 (TO I-8)
I-8
STA.=3+74.59
RIM=609.21
INV. OUT=604.21 (TO I-6)
I-6 (TYPE 4 BOX)(2" SUMP)
STA.=3+74.59
RIM=609.21
INV. IN=603.16 (FROM I-10)
INV. IN=603.16 (FROM I-7)
INV. IN=603.16 (FROM I-8)
INV. OUT=602.66 (TO SMH-5)
I-7
STA.=2+74.59
T.C.=606.87
INV. IN=602.00 (FROM I-10)
INV. OUT=602.00 (TO I-6)
I-10 (TYPE 4 BOX)
STA.=3+39.62
RIM=609.23
INV. IN=603.24 (FROM I-12)
INV. IN=603.24 (FROM I-9)
INV. OUT=603.24 (TO I-7)
I-12
STA.=7+09.62
T.C.=609.23
INV. IN=605.35 (FROM I-13)
INV. OUT=605.35 (TO I-10)
I-13
STA.=8+09.62
T.C.=609.23
INV. IN=605.60 (FROM I-14)
INV. OUT=605.60 (TO I-12)
I-14
STA.=8+90.18
T.C.=614.80
INV. IN=606.80 (FROM I-15)
INV. IN=608.86 (FROM I-15)
INV. OUT=606.86 (TO I-13)
I-15
STA.=9

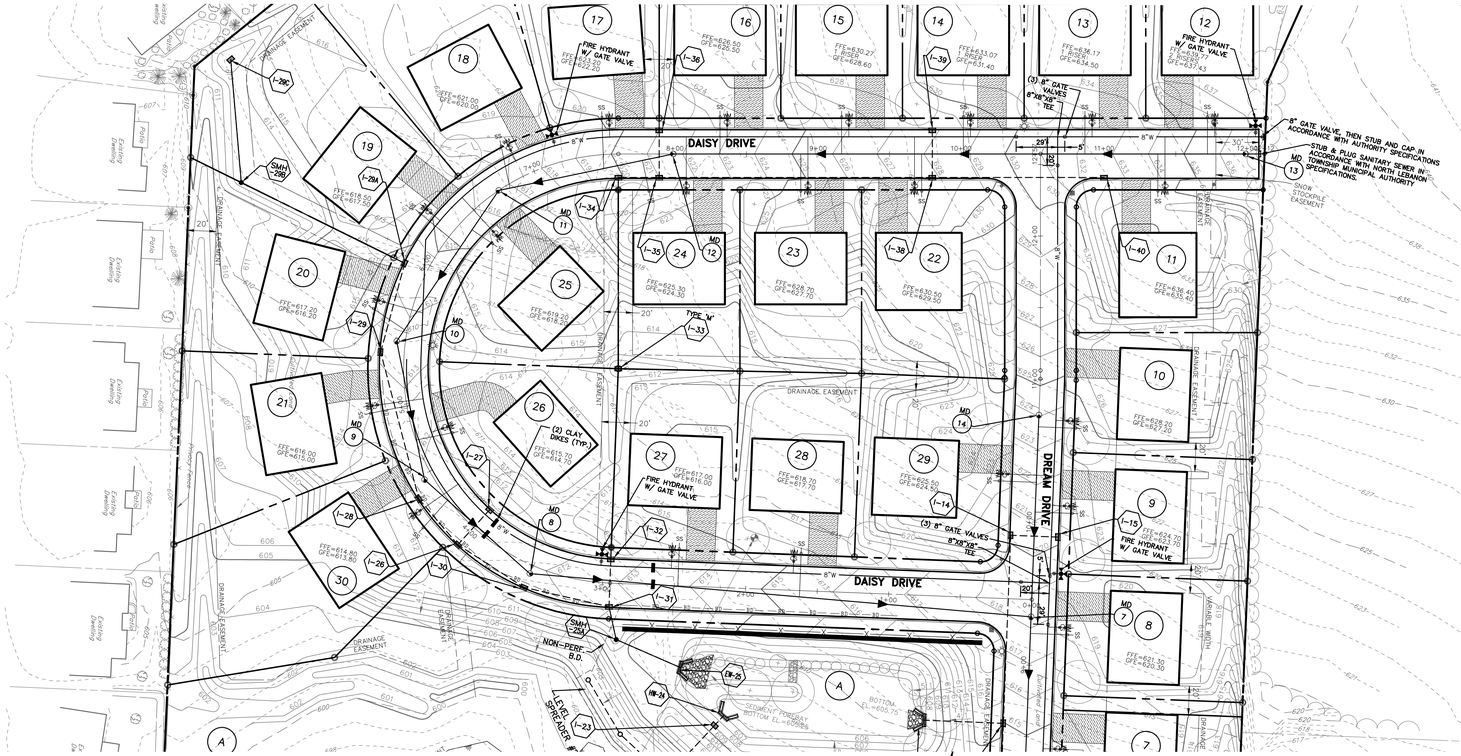

PLAN: DAISY DRIVE

SCALE: 1" = 50'

WATERLINE NOTE

THE MAXIMUM DEPTH TO THE TOP OF THE WATER MAIN IS 7.25'.

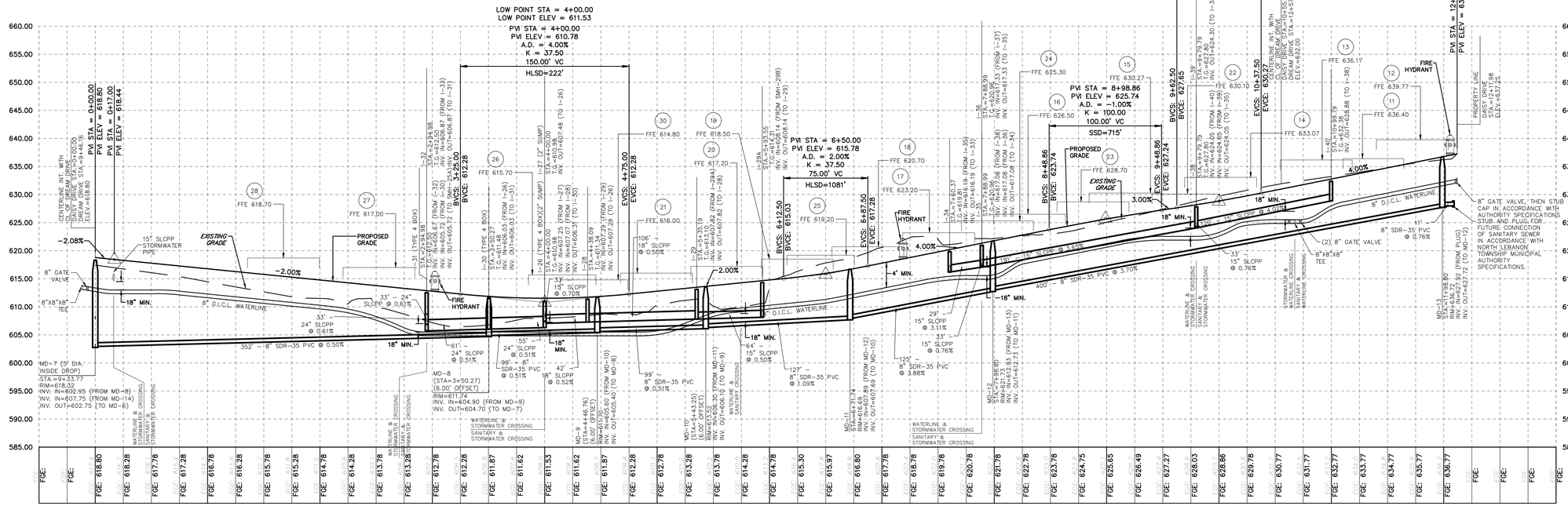

PIONEER Management, LLC
111 Millersville Road, Lancaster, PA 17603
Phone: 717-481-4955 Fax: 717-481-4955
Email: jb@pioneermanagementllc.com
Website: www.pioneermanagementllc.com

CLIENT
MR. S. GERALD MUSSER
144 BELL ROAD
PALMYRA, PA 17078
(717) 821-1129

NO.	DATE	REVISION
3	12-21-21	REVISED PER N. LEB. TWP., LEB. CNTY. ENG. & THE REVISED WALL DESIGN
2	9-29-21	REVISED PER SEWER AUTH, N. LEB. TWP., LEB. CNTY. ENG. & THE REVISED WALL DESIGN
1	6-18-21	REVISED PER LCCD, DEP, SEWER AUTH., N. LEB. TWP., & LCPD

MANAGER: JAMES C. HENKE
SURV. CHIEF:
FIELDBOOK NO.
FOR PIONEER MANAGEMENT BY:
DESIGN BY: JDB/KWG
CHKD BY: JDB/JCH
DRAWN BY: JDB/MLS
CHKD BY: JCH
DRAWING REFERENCE: C:\18\18-2000-01\CAD\Prior Plan\Profiles.dwg
XREFS:
TB: [F:\18\18-2000-01\CAD\Final Plans\18-2000-01-Base(Xrefs-Surveyfiles).dwg]
Pro-Base: [F:\18\18-2000-01\CAD\Final Plans\18-2000-01-Base(Xrefs-Base).dwg]
Pro-Sheet: [F:\18\18-2000-01\CAD\Final Plans\18-2000-01-Sheet(Xrefs-Base).dwg]
Sheet Alignments: [F:\18\18-2000-01\CAD\Final Plans\18-2000-01-Sheet Alignments.dwg]

SCALE: AS NOTED

DAISY DRIVE PLAN AND PROFILE

FOR THE
FINAL SUBDIVISION AND LAND DEVELOPMENT PLAN OF
MAPLEDALE ESTATES
NORTH LEBANON TOWNSHIP LEBANON COUNTY, PA.

DATE: FEB. 25, 2021
SHEET NO. 22 OF 36
DWG. NO. 18-2000-01-B

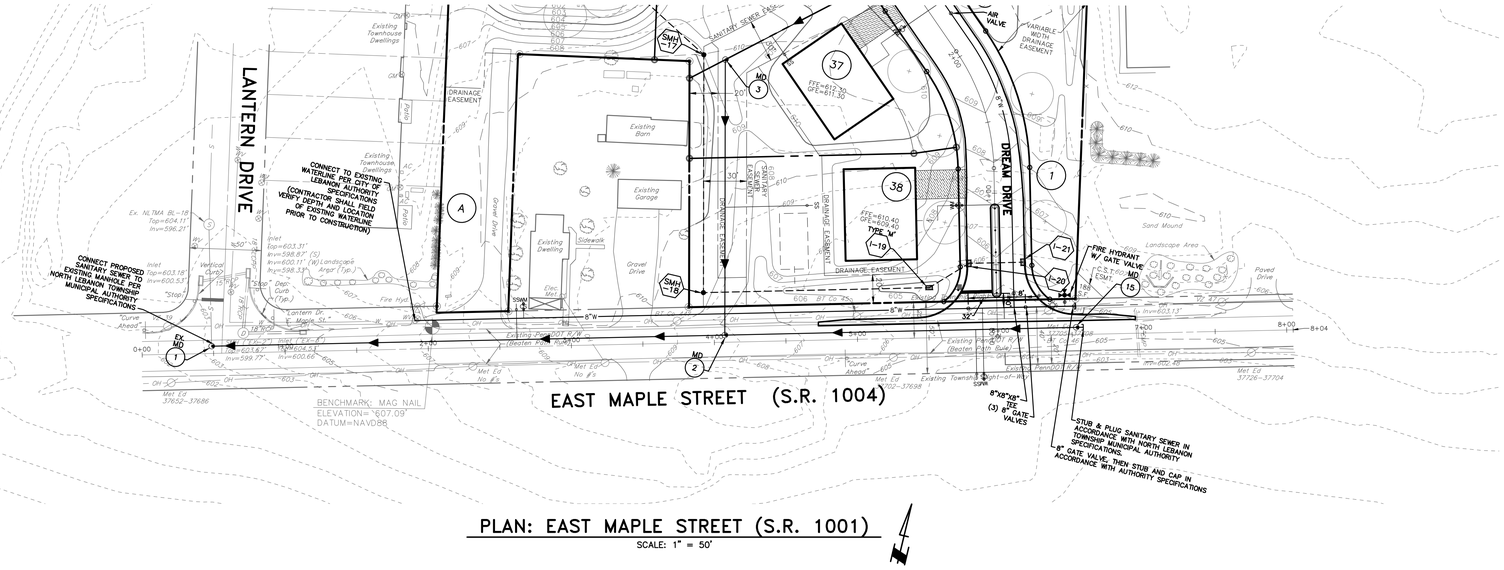
LANTERN DRIVE
DREAM DRIVE
EAST MAPLE STREET (S.R. 1004)
DRAINAGE EASEMENT
Existing Townhouse Dwellings
Existing Barn
Existing Garage
Existing Dwelling
Sidewalk
Gravel Drive
Paved Drive
Sand Mound
Landscape Area
Existing Townhouse Dwellings
Existing Townhouse Dwellings
SMH-17
SMH-16
SMH-15
MD 1
MD 2
MD 3
A
37
38
1-19
1-20
1-21
AIR VALVE
VARIABLE WIDTH DRAINAGE EASEMENT
FFE=612.30
GFE=611.30
FFE=610.40
GFE=609.40
TYPE 'M'
CONNECT TO EXISTING WATERLINE PER CITY OF LEBANON AUTHORITY SPECIFICATIONS (CONTRACTOR TO VERIFY DEPTH AND LOCATION OF EXISTING WATERLINE PRIOR TO CONSTRUCTION)
CONNECT PROPOSED SANITARY SEWER TO EXISTING MANHOLE PER NORTH LEBANON TOWNSHIP MUNICIPAL AUTHORITY SPECIFICATIONS
Ex. NLTMA BL-18 Top=604.11' Inv=596.21'
Inlet Top=603.18' Inv=600.53'
Inlet Top=603.31' Inv=598.87' (S) Inv=600.11' (W) Inv=598.33' (E)
Inlet Top=604.53' Inv=600.66'
Inlet Top=604.53' Inv=599.77'
Fire Hydrant
Vertical Curb
Dep. Curb (Typ.)
"Lantern Dr." "Stop"
"Curve Ahead"
"Maple St." "Curve Ahead"
Ex. MD-1
0+00
4+00
7+00
8+04
8"W
8"S
8"W
8"W
8"W

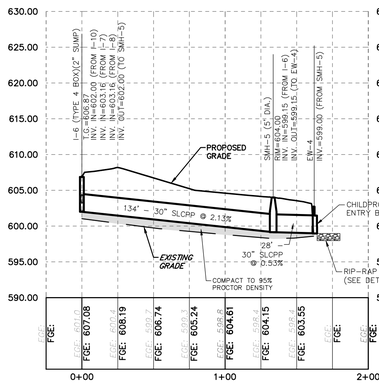

I-6 TO EW-4

SCALE: 1" = 50' HORIZ.
1" = 10' VERTICAL.

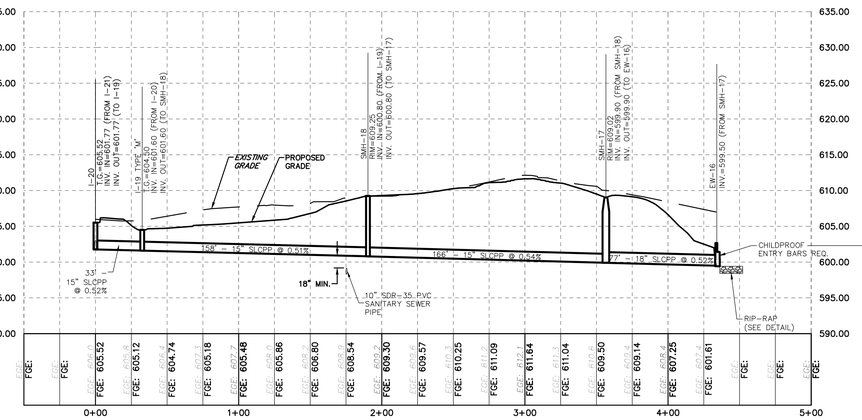

1-20 TO EW-16

SCALE: 1" = 50' HORIZ.
1" = 10' VERTICAL.

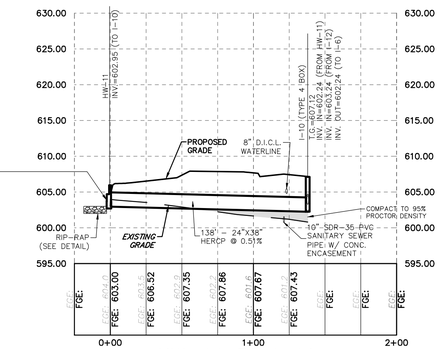

HW-11 TO I-10

SCALE: 1" = 50' HORIZ.
1" = 10' VERTICAL.

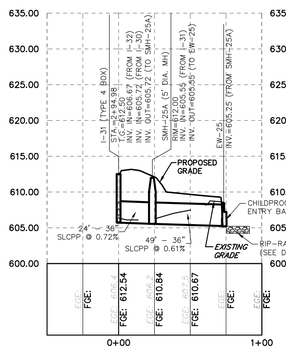

I-31 TO EW-25

SCALE: 1" = 50' HORIZ.
1" = 10' VERTICAL.

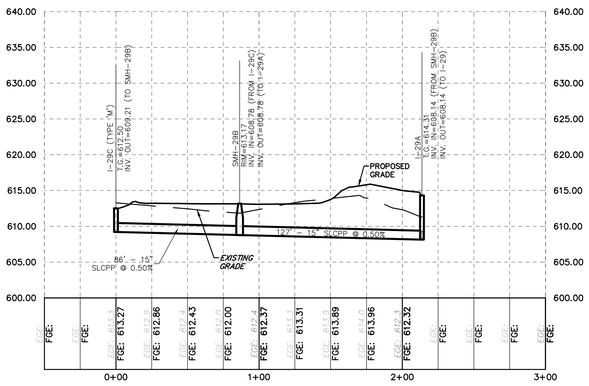

I-29C TO I-29A

SCALE: 1" = 50' HORIZ.
1" = 10' VERTICAL.

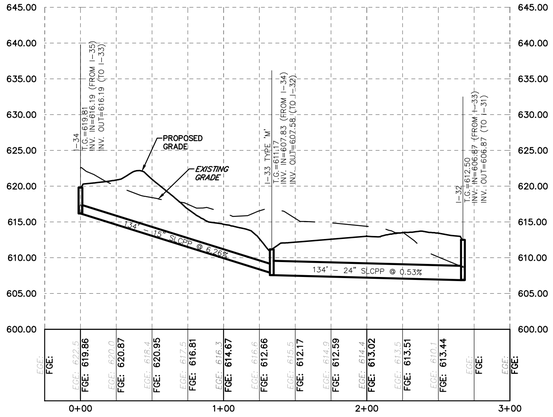

I-34 TO I-32

SCALE: 1" = 50' HORIZ.
1" = 10' VERTICAL.

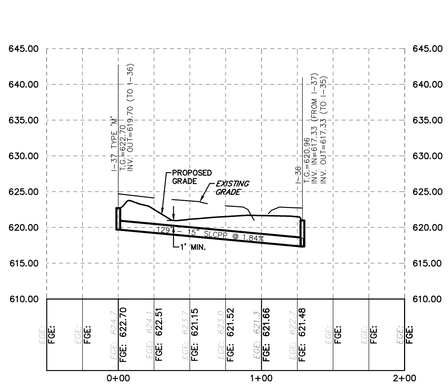

I-37 TO I-36

SCALE: 1" = 50' HORIZ.
1" = 10' VERTICAL.

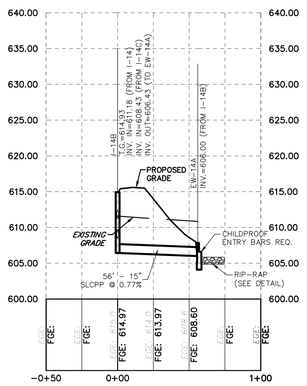

I-14B TO EW-14A

SCALE: 1" = 50' HORIZ.
1" = 10' VERTICAL.

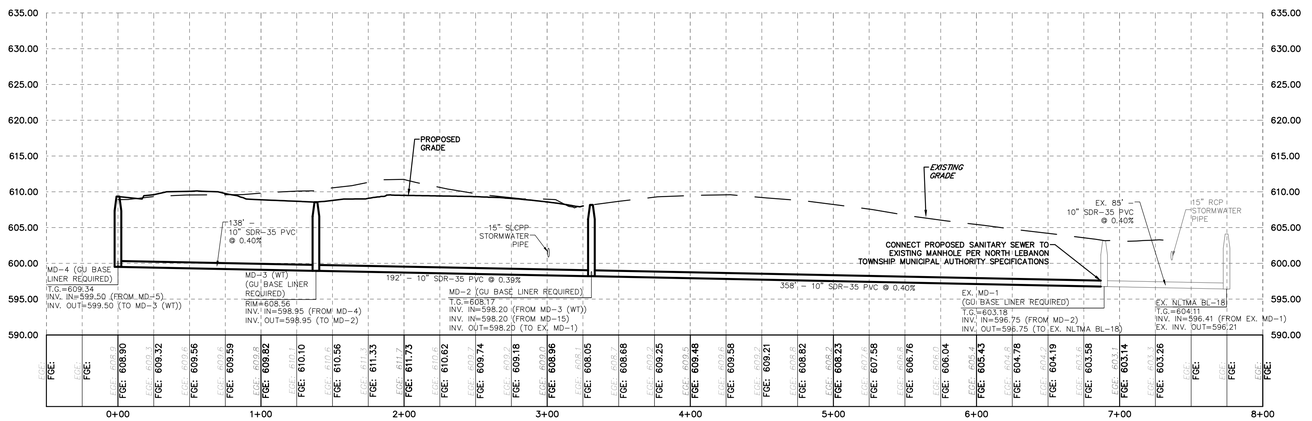

MH-4 TO EX. NLTMA BL-18

SCALE: 1" = 50' HORIZ.
1" = 10' VERTICAL.

NO.	DATE	REVISION
3	12-21-21	REVISED PER N. LEB. TWP., LEB. CNTY. ENG. & THE REVISED WALL DESIGN
2	9-29-21	REVISED PER SEWER AUTH, N. LEB. TWP., LEB. CNTY. ENG. & THE REVISED WALL DESIGN
1	6-18-21	REVISED PER LCCD, DEP, SEWER AUTH., N. LEB. TWP., & LCPD

FOR PIONEER MANAGEMENT BY:

MANAGER: JAMES C. HENKE	SURV. CHIEF:
DESIGN BY: JDB/KWG	DRAWN BY: JDB/MLS
CHKD BY: JDB/JCH	CHKD BY: JCH
DRAWING REFERENCE: F:\18\18-2000-01\CAD\Final Plan\Profiles.dwg	FIELDBOOK NO.

XREFS:
TB: [F:\18\18-2000-01\CAD\Final Plan\X-Hatch-TB.dwg]
Survey: [F:\18\18-2000-01\CAD\Survey\Base Plan\Base Plan-Survey.dwg]
Plan-Base: [F:\18\18-2000-01\CAD\Final Plan\LCD-Base\Plan-Base.dwg]
Plan-Base: [F:\18\18-2000-01\CAD\Final Plan\LCD-Base\Plan-Base.dwg]
Sheet Alignments: [F:\18\18-2000-01\CAD\Final Plan\LCD-Base\Street Alignments.dwg]

CLIENT
MR. S. GERALD MUSSER
144 BELL ROAD
PALMYRA, PA 17078
(717) 821-1129

SCALE: AS NOTED

PIONEER Management, LLC
111 Millersville Road, Lancaster, PA 17603
Phone: (717) 481-8400 Fax: (717) 481-4955
Email: jrb@pioneermanagementllc.com
Website: www.pioneermanagementllc.com

STORMWATER & SANITARY SEWER OVERLAND PROFILES

FOR THE
FINAL SUBDIVISION AND LAND DEVELOPMENT PLAN OF

MAPLEDALE ESTATES

NORTH LEBANON TOWNSHIP LEBANON COUNTY, PA

DATE: FEB. 25, 2021

SHEET NO. 24 OF 36

DWG. NO. 18-2000-01-B

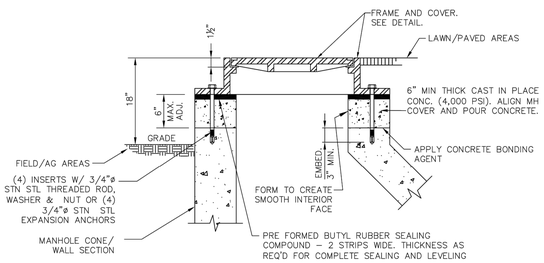

CROSS SECTION

OPTION 1 – CAST–IN–PLACE CONCRETE RISER

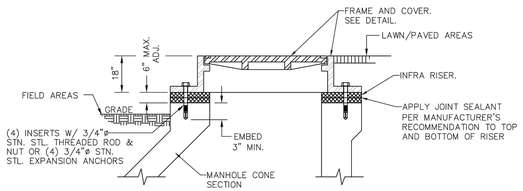

CROSS SECTION

OPTION 2 – RUBBER RISERS

NOTES
1. CONTRACTOR HAS OPTION TO PROVIDE ANY OF THE OPTIONS INDICATED.
2. TAPER GRADE RINGS TO MATCH ROAD PROFILE IN PAVED AREAS.

MANHOLE GRADE RINGS

NOT TO SCALE

NOTES:
1. PRECAST REINFORCED CONCRETE MANHOLES SHALL CONFORM TO A.S.T.M. SPEC. C–478.
2. STEEL REINFORCEMENT SHALL BE GRADE 60 PER ASTM A–615.
3. IF INCOMING INVERT EXCEEDS OUTGOING INVERT BY GREATER THAN OR EQUAL TO 12", SEE INSIDE SPLASH/ INSIDE DROP MANHOLE DETAILS.
4. FOR MANHOLES WHERE TOP OF RIM TO INVERT DISTANCE IS LESS THAN 5'–0", USE FLAT TOP MANHOLE IN LIEU OF CONE TOP.
5. FILL ALL LIFTING HOLES WITH NON–SHRINK GROUT.
6. 5' DIA MANHOLE REQUIRED ON INSIDE DROP. SEE INSIDE DROP MH DETAIL FOR ADDITIONAL DETAILS.
7. ALL MANHOLE HARDWARE SHALL BE STN STL.

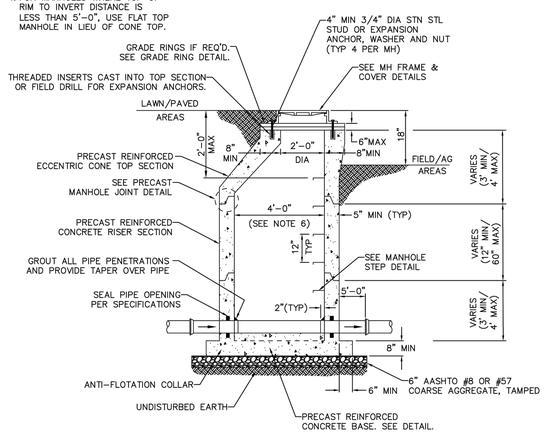

PRECAST CONCRETE MANHOLE

NOT TO SCALE

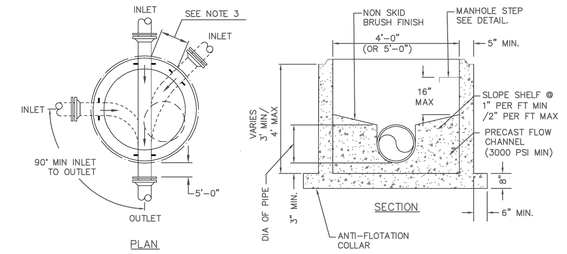

NOTES
1. THREE INLET PIPES AND ONE OUTLET PIPE MAX INTO 4' DIA. MANHOLE.
2. NO LATERALS INTO MANHOLES, UNLESS AUTHORIZED OTHERWISE BY NLTMA.
3. MINIMUM 12" SEPARATION FROM EDGE OF PIPE PENETRATION TO EDGE OF PIPE PENETRATION.
4. MINIMUM CHANNEL DROP THROUGH MANHOLE:
   STRAIGHT THROUGH – 0.1 FEET
   BEND – 0.2 FEET
5. ALL CHANNELS SHALL BE PRECAST UNLESS APPROVED OTHERWISE BY NLTMA.
6. THESE DETAILS APPLY TO PRECAST CHANNELS IN NEW MANHOLES AND FIELD–FORMED CHANNELS IN EXISTING MANHOLES.
7. CHANNELS SHALL MATCH THE CROSS–SECTIONAL DIMENSIONS OF THE PIPES ENTERING AND EXITING THE MANHOLE. SMOOTH TRANSITIONS SHALL BE PROVIDED BETWEEN CHANGES IN PIPE SIZE.
8. 4'–0" DIA. UNLESS PIPING CONFIGURATION REQUIRES LARGER.
9. MIN. DEPTH OF CHANNEL SHALL MATCH DIAMETER OF LARGEST PIPE ENTERING MANHOLE.

PRECAST MANHOLE BASE

NOT TO SCALE

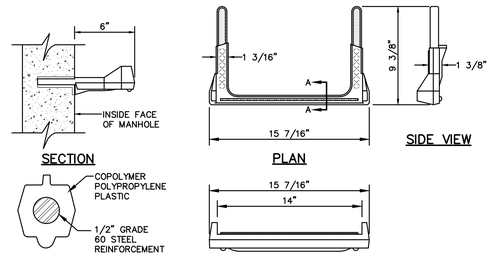

POLYPROPYLENE MANHOLE STEP DETAIL

NOT TO SCALE

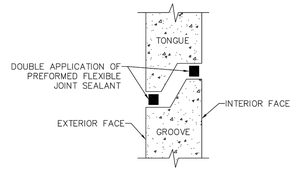

PRECAST MANHOLE JOINT

NOT TO SCALE

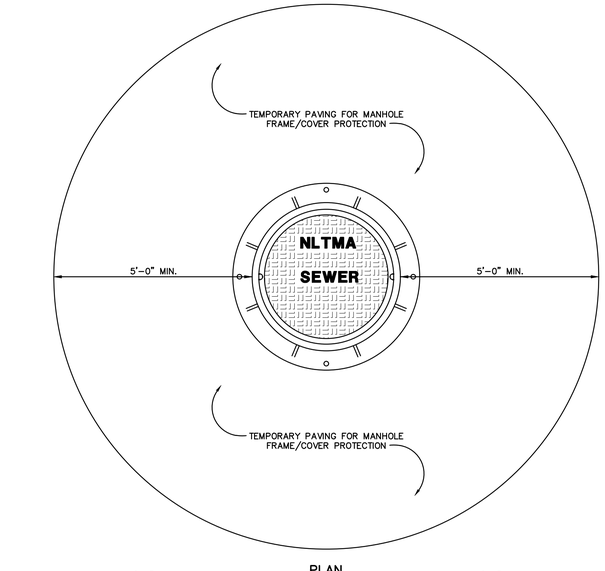

MANHOLE FRAME & COVER PROTECTION PRIOR TO FINAL PAVING

NOT TO SCALE

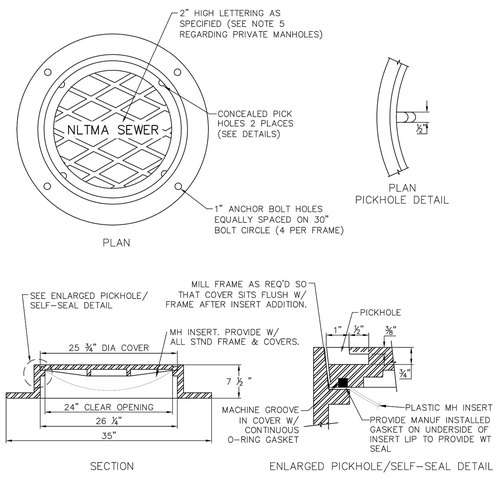

NOTES:
1. CAST IRON MEETS ASTM SPEC A–48 CLASS 35B, AASHTO HIGHWAY LOADING HS–20 EQUIVALENT TO NEENAH FOUNDRY COMPANY MODEL R–1643.
2. LOW PROFILE FRAME AND COVERS SHALL ONLY BE USED FOLLOWING APPROVAL BY NLTMA DUE TO RISER ADJUSTMENT LIMITATIONS.
3. APPLY ANTI–SEIZE COMPOUND TO ALL THREADED SURFACES.
4. LETTERING FOR PRIVATE MANHOLES SHALL BE "PRIVATE SEWER".

STANDARD MANHOLE FRAME & COVER

NOT TO SCALE

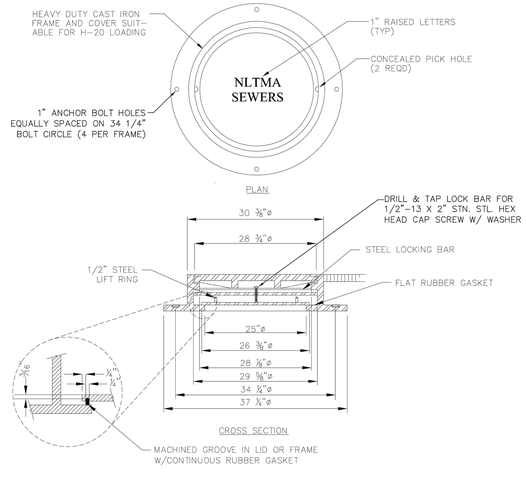

NOTES:
1. CAST IRON MEETS ASTM SPEC A–48 CLASS 35B, AASHTO HIGHWAY LOADING HS–20.
2. APPROVED MANUFACTURER: NEENAH FOUNDRY COMPANY MODEL R–1755. NO SUBSTITUTIONS ALLOWED UNLESS OTHERWISE APPROVED BY NLTMA.
3. APPLY ANTI–SEIZE COMPOUND TO ALL THREADED SURFACES.
4. LETTERING FOR PRIVATE MANHOLES SHALL BE "PRIVATE SEWER".

WATERTIGHT MANHOLE FRAME & COVER (WD–3)

NOT TO SCALE

NO.	DATE	REVISION
3	12–21–21	REVISED PER N. LEB. TWP., LEB. CNTY. ENG. & THE REVISED WALL DESIGN
2	9–29–21	REVISED PER SEWER AUTH, N. LEB. TWP., LEB. CNTY. ENG. & THE REVISED WALL DESIGN
1	6–18–21	REVISED PER LCCD, DEP, SEWER AUTH., N. LEB. TWP., & LCPD

FOR PIONEER MANAGEMENT BY:

MANAGER: JAMES C. HENKE
DESIGN BY: JDB/KWG
CHKD BY: JDB/JCH
SURV. CHIEF:
FIELDBOOK NO.
DRAWN BY: JDB/MLS
CHKD BY: JCH
DRAWING REFERENCE: F:\18\18–2000–01\CAD\Other Plan\Details.dwg
XREFS: TB: [F:\18\18–2000–01\CAD\Final Plan\X–Mark\TB.dwg]

CLIENT
MR. S. GERALD MUSSER
144 BELL ROAD
PALMYRA, PA 17078
(717) 821–1129

SCALE: AS NOTED

PIONEER Management, LLC
111 Millersville Road, Lancaster, PA 17603
Phone: (717) 481–8500 Fax: (717) 481–4855
Email: jrb@pioneermanagementllc.com
Website: www.pioneermanagementllc.com

SANITARY SEWER DETAILS
FOR THE
FINAL SUBDIVISION AND LAND DEVELOPMENT PLAN OF
MAPLEDALE ESTATES
NORTH LEBANON TOWNSHIP LEBANON COUNTY, PA.

DATE: FEB. 25, 2021
SHEET NO. 25 OF 36
DWG. NO. 18–2000–01–B

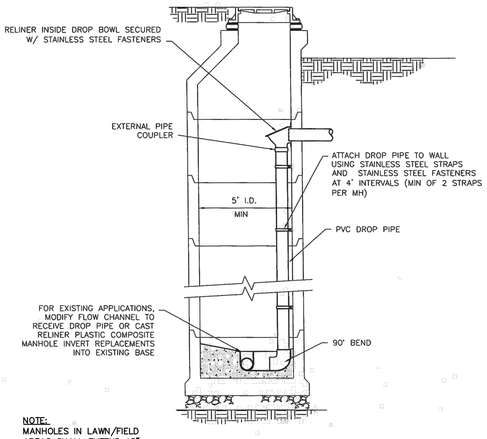

NOTE:
MANHOLES IN LAWN/FIELD AREAS SHALL EXTEND 18" ABOVE FINISHED GRADE.

TYPICAL CROSS SECTION

INSIDE DROP MANHOLE

NOT TO SCALE

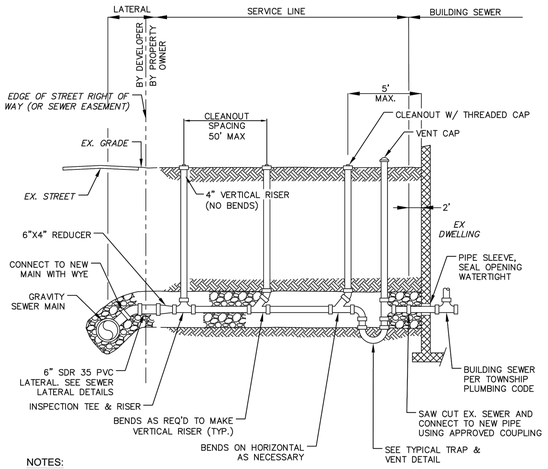

NOTES:

1 PROVIDE 6" OF AASHTO NO. 8 (1B) STONE BELOW PIPE AND 12" ABOVE PIPE (TYPICAL ENTIRE LENGTH OF LATERAL)

2 MINIMUM SLOPE 1% (1/8" PER FT)

3 MINIMUM DEPTH OF COVER = 4 FT

4 PIPE MATERIALS:
SERVICE LINE - PVC SDR 35 (PUSH-ON JOINTS)
- PVC SCH 40, SOLVENT WELD

5 NO SEWER SERVICE LINE VENT CAPS SHALL BE INSTALLED WITHIN A 100 YEAR FLOOD PLAIN OR WITHIN FLOOD PRONE AREAS.

6 NO VENT CAPS OR CLEANOUTS SHALL BE INSTALLED IN DRIVEWAYS OR OTHER PAVED AREAS UNLESS SPECIFICALLY APPROVED BY NLTMA.

GRAVITY SERVICE LINE INSTALLATION

NOT TO SCALE

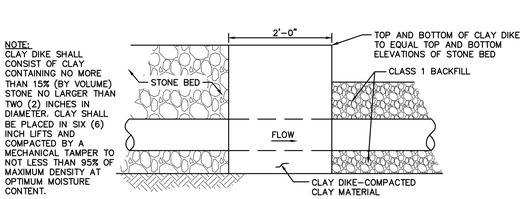

CLAY DIKE

NOT TO SCALE

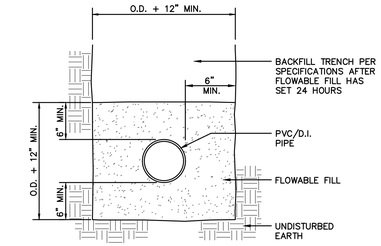

CONCRETE ENCASEMENT DETAIL

NOT TO SCALE

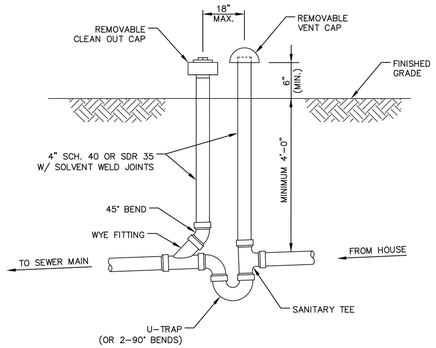

TYPICAL TRAP & VENT ASSEMBLY

NOT TO SCALE

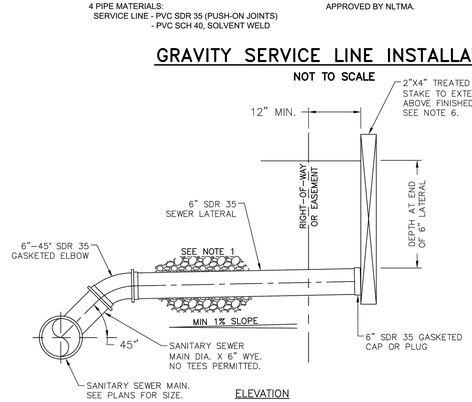

ELEVATION

NOTES:

1. PROVIDE 6" OF AASHTO NO. 8 (1B) STONE BELOW PIPE AND 12" ABOVE PIPE. (TYPICAL ENTIRE LENGTH OF LATERAL.
2. MINIMUM SLOPE = 1% (1/8" PER FOOT)
3. MINIMUM DEPTH OF COVER = 4 FT
4. DEVELOPER SHALL TEST AGAINST 6" SDR 35 GASKETED CAP OR PLUG.
5. LATERAL TO EXTEND 12" BEYOND R.O.W. OR EASEMENT OR AS APPROVED OTHERWISE BY NLTMA.
6. LABEL STAKE AS "SEWER LATERAL". NOTE LATERAL DEPTH AT EDGE OF R.O.W. OR EASEMENT.

SEWER LATERAL INSTALLATION

NOT TO SCALE

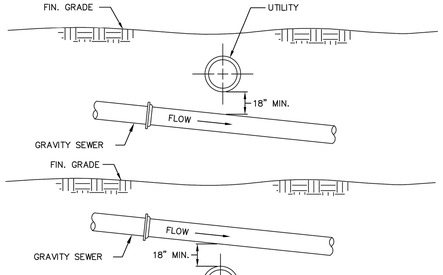

NOTE: MAINTAIN SLOPE OF PROPOSED SEWER AT ALL CROSSINGS.

GRAVITY SEWER CROSSING UTILITIES

NOT TO SCALE

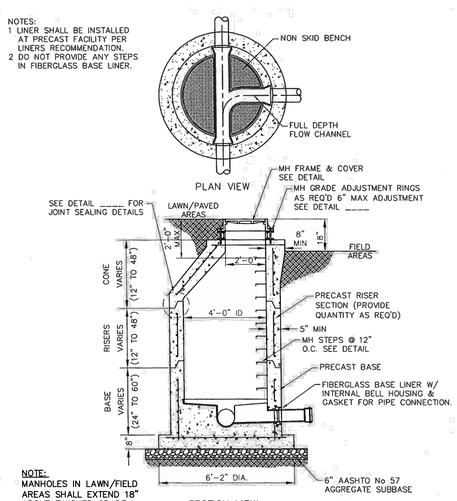

PRECAST MANHOLE WITH GU BASE LINER (MD-1, MD-2, MD-3 & MD-4)

NOT TO SCALE

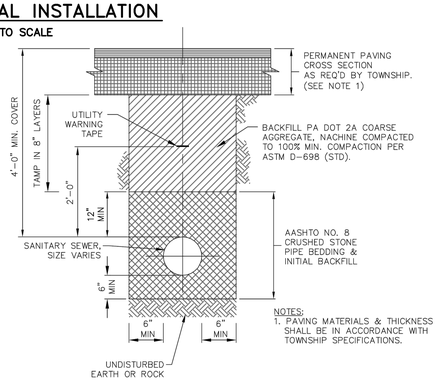

TRENCH RESTORATION - NEW ROADWAY

NOT TO SCALE

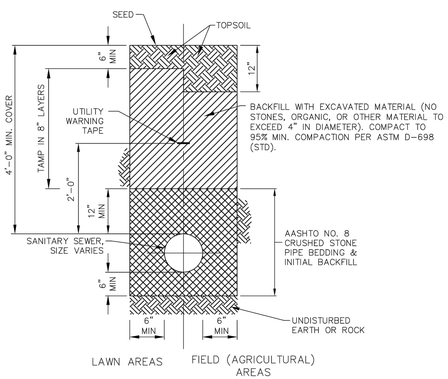

TRENCH RESTORATION - LAWN/FIELD AREAS

NOT TO SCALE

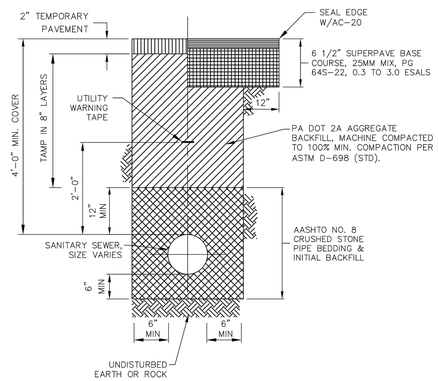

TRENCH RESTORATION - EXISTING PAVED AREAS

NOT TO SCALE

NO.	DATE	REVISION
3	12-21-21	REVISED PER N. LEB. TWP., LEB. CNTY. ENG. & THE REVISED WALL DESIGN
2	9-29-21	REVISED PER SEWER AUTH, N. LEB. TWP., LEB. CNTY. ENG. & THE REVISED WALL DESIGN
1	6-18-21	REVISED PER LCCD, DEP, SEWER AUTH., N. LEB. TWP., & LCPD

FOR PIONEER MANAGEMENT BY:

SURV. CHIEF: | FIELDBOOK NO. | CHKD BY: JCH

DRAWN BY: JDB/MLS

MANAGER: JAMES C. HENKE
DESIGN BY: JDB/KWG
CHKD BY: JDB/JCH

DRAWING REFERENCE:
F:\18\18-2000-01\CAD\Other Plan\Details.dwg

XREFS:
TB [F:\18\18-2000-01\CAD\Final Plan\X-Mech\TB.dwg]

CLIENT
MR. S. GERALD MUSSER
144 BELL ROAD
PALMYRA, PA 17078
(717) 821-1129

SCALE
AS NOTED

PIONEER Management, LLC
111 Millersville Road, Lancaster, PA 17603
Phone: (717) 464-4500 Fax: (717) 481-4955
Email: jb@pioneermanagementllc.com
Website: www.pioneermanagementllc.com

SANITARY SEWER DETAILS

FOR THE FINAL SUBDIVISION AND LAND DEVELOPMENT PLAN OF

MAPLEDALE ESTATES

NORTH LEBANON TOWNSHIP LEBANON COUNTY, PA

DATE: FEB. 25, 2021

SHEET NO. 26 OF 36

DWG. NO. 18-2000-01-B

F:\18\18-2000-01\CAD\Final Plan\Details.dwg, 27 WATERLINE DETAILS, 12/21/2021 1:51:59 PM, 1:1

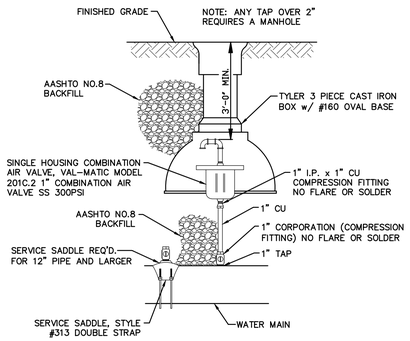

1" AIR VALVE DETAIL
NOT TO SCALE

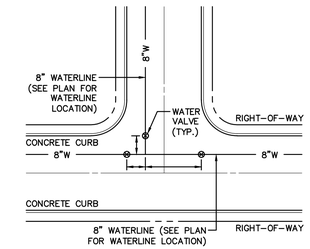

NOTES:
1. ALL DIMENSIONS FROM THE TEE TO THE GATE VALVE WILL VARY AND ARE MARKED ON THE UTILITY PLAN. THE INTEND IS TO INSTALL EACH GATE VALVE IN LINE WITH THE EDGE OF PAVEMENT EXTENDED. SEE SHEETS 14 & 15 FOR UNIQUE CIRCUMSTANCES WHERE EDGE OF PAVEMENT EXTENDED CREATES CONFLICTS WITH STORMWATER PIPES AND DIMENSIONS ARE SHOWN IN AN EFFORT TO OFFER ADEQUATE SEPARATION FROM OTHER UTILITIES.
2. IF A BELL JOINT FALLS BETWEEN A CROSS OR TEE AND THE NEXT VALVE, A FIELD LOCK(S) IS TO BE INSTALLED.

LOCATION OF WATER VALVES PER CITY OF LEBANON AUTHORITY CRITERIA
NOT TO SCALE

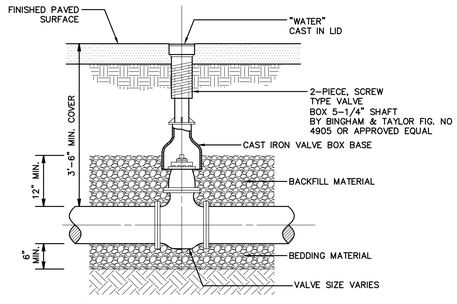

NOTE: VALVE BOX BASES TO BE:
NO. 4 DOME – VALVES 4" AND SMALLER
NO. 6 ROUND – 6" AND 8" VALVES
NO. 160 OVAL – 10" TO 16" VALVES

GATE VALVE INSTALLATION DETAIL
NOT TO SCALE

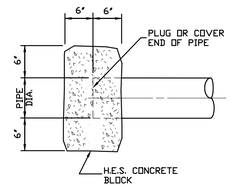

CUT AND PLUG
NOT TO SCALE

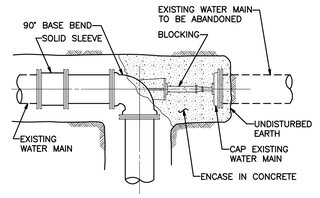

CUTTING-IN CONNECTION DETAIL
NOT TO SCALE

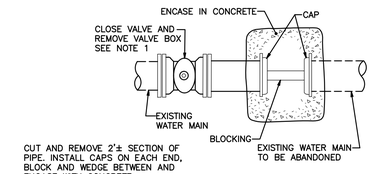

DETAIL A

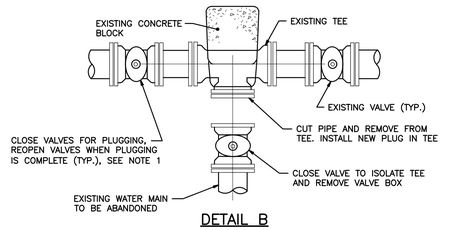

DETAIL B

NOTE: VALVES TO BE OPERATED BY AUTHORITY PERSONNEL ONLY.

CUTTING, CAPPING AND BLOCKING DETAILS
NOT TO SCALE

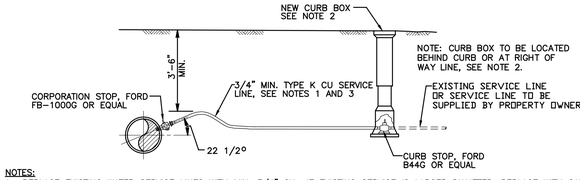

NOTES:
1. REPLACE EXISTING WATER SERVICE LINES WITH MIN. 3/4" CU., IF EXISTING SERVICE IS LARGER DIAMETER, REPLACE WITH SAME SIZE.
2. CURB STOP LOCATION NO MORE THAN 1'-0" BEHIND CURB.
3. NEW SERVICE LINES – FROM CORPORATION TO CURB STOP, INCLUDING NEW CURB BOX.
4. ANY METER PITS REQUIRED FOR SERVICE LINES WILL BE AT THE AUTHORITY'S DISCRETION.

TYPICAL WATER SERVICE CONNECTION DETAIL
NOT TO SCALE

NOTES:
SECTION 114 – FIRE HYDRANT MARKERS

1. IT SHALL BE THE RESPONSIBILITY OF THE DEVELOPER TO PURCHASE AND INSTALL FIRE HYDRANT MARKERS FOR ALL NEWLY INSTALLED FIRE HYDRANTS PER TOWNSHIP REQUIREMENTS.
2. SPRING-EQUIPPED FIRE HYDRANT MARKERS shall be 5' IN HEIGHT WITH 3/8" DIAMETER MARKER POLE WITH REFLECTIVE RED/WHITE STRIPING. MARKER MUST BE CORROSION RESISTANT AND HAVE HIGH VISIBILITY AND BEND STRENGTH. MIL-SPEC STEEL "L-BRACKET" WITH POLYURETHANE COATING FOR HYDRANT FLANGE BOLT MOUNTING. MARKERS CAN BE PURCHASED FROM TOWNSHIP STOCK OR DEVELOPER CAN PROVIDE MARKER OF EQUAL QUALITY, AS APPROVED BY THE TOWNSHIP ROADMASTER.
3. HYDRANTS AT INTERSECTIONS OR OTHER CRITICAL AREAS SHALL INCLUDE A 4" X 5" MINI FLAG, WHICH IS MADE OF WHITE UV-PROTECTED, EXTERIOR GRADE PVC AND STRIPED WITH RED REFLECTIVE TAPE. MINI FLAGS MOUNT TO THE 3/8" MARKER POLES USING AN INTEGRAL SCREW-TIGHTENING CLAMP.



FIRE HYDRANT MARKER
NOT TO SCALE

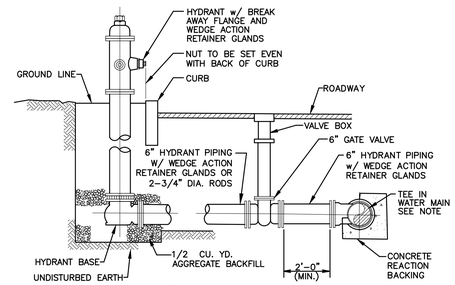

NOTE: WRAP FITTING w/ POLYETHYLENE WRAP PRIOR TO CONCRETE WORK.

HYDRANT DETAIL AT CURB
NOT TO SCALE

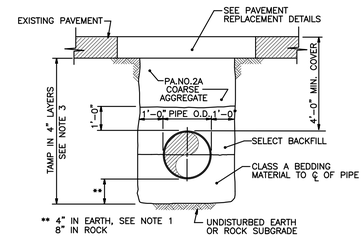

NOTES:
1. IF UNSUITABLE SUBSOIL IS ENCOUNTERED AT THE NORMAL TRENCH SUBGRADE, THE CONTRACTOR SHALL REMOVE IT TO THE DEPTH DIRECTED BY THE ENGINEER IN THE FIELD, AND BACKFILL w/ CLASS A BEDDING IN 4" LAYERS.
2. BOTTOM OF TRENCH SHALL BE FREE OF WATER PRIOR TO WATER MAIN INSTALLATION.
3. IF VIBRATORY COMPACTION EQUIPMENT IS USED BACKFILL MAY BE IN 8" LAYERS.
4. PROVIDE 4" OF TOPSOIL WHERE SEEDING IS REQUIRED. SEE NOTE 6 AT GRAVEL DRIVEWAYS.
5. CONTRACTOR SHALL SHORE THE TRENCH IN ACCORDANCE WITH SECTION 02151 OF THE SPECIFICATIONS.
6. GRAVEL AND PAVED DRIVEWAYS TO BE RESTORED IN KIND.
7. CONTRACTOR MAY SUBSTITUTE PA NO. 2A FOR CLASS A BEDDING AT NO INCREASED COST TO THE OWNER WITH WRITTEN PERMISSION FROM THE ENGINEER OR OWNER. FOR DESCRIPTION OF BACKFILL MATERIAL, SEE SPECIFICATION SECTION 02221.
8. ALL PAVING RESTORATION TO BE IN ACCORDANCE WITH PennDOT PUB. 408/2003 AND PUB. 72M.

TYPICAL TRENCH (PAVED AREAS)
NOT TO SCALE

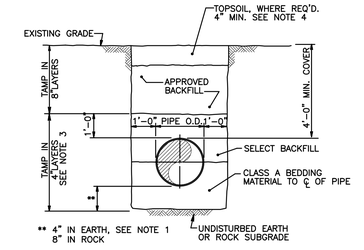

NOTES:
1. IF UNSUITABLE SUBSOIL IS ENCOUNTERED AT THE NORMAL TRENCH SUBGRADE, THE CONTRACTOR SHALL REMOVE IT TO THE DEPTH DIRECTED BY THE ENGINEER IN THE FIELD, AND BACKFILL w/ CLASS A BEDDING IN 4" LAYERS.
2. BOTTOM OF TRENCH SHALL BE FREE OF WATER PRIOR TO WATER MAIN INSTALLATION.
3. IF VIBRATORY COMPACTION EQUIPMENT IS USED BACKFILL MAY BE IN 8" LAYERS.
4. PROVIDE 4" OF TOPSOIL WHERE SEEDING IS REQUIRED. SEE NOTE 6 AT GRAVEL DRIVEWAYS.
5. CONTRACTOR SHALL SHORE THE TRENCH IN ACCORDANCE WITH SECTION 02151 OF THE SPECIFICATIONS.
6. GRAVEL AND PAVED DRIVEWAYS TO BE RESTORED IN KIND.
7. CONTRACTOR MAY SUBSTITUTE PA NO. 2A FOR CLASS A BEDDING AT NO INCREASED COST TO THE OWNER WITH WRITTEN PERMISSION FROM THE ENGINEER OR OWNER. FOR DESCRIPTION OF BACKFILL MATERIAL, SEE SPECIFICATION SECTION 02221.
8. ALL PAVING RESTORATION TO BE IN ACCORDANCE WITH PennDOT PUB. 408/2003 AND PUB. 72M.

TYPICAL TRENCH (UNPAVED AREAS)
NOT TO SCALE

NO.	DATE	REVISION
3	12-21-21	REVISED PER N. LEB. TWP., LEB. CNTY. ENG. & THE REVISED WALL DESIGN
2	9-29-21	REVISED PER SEWER AUTH, N. LEB. TWP., LEB. CNTY. ENG. & THE REVISED WALL DESIGN
1	6-18-21	REVISED PER LCCD, DEP, SEWER AUTH., N. LEB. TWP., & LCPD

FOR PIONEER MANAGEMENT BY:

SURV. CHIEF: | FIELDBOOK NO. | CHKD BY: JCH
DRAWN BY: JDB/MLS
MANAGER: JAMES C. HENKE
DESIGN BY: JDB/KWG | CHKD BY: JDB/JCH
DRAWING REFERENCE: F:\18\18-2000-01\CAD\Final Plan\Details.dwg
XREFS: TB1 [F:\18\18-2000-01\CAD\Final Plan\X-Xtech\TB.dwg]

CLIENT
MR. S. GERALD MUSSER
144 BELL ROAD
PALMYRA, PA 17078
(717) 821-1129

SCALE: AS NOTED

PIONEER Management, LLC
111 Millersville Road, Lancaster, PA 17603
Phone: (717) 481-4855 Fax: (717) 481-4855
Email: jyb@pioneermanagementllc.com
Website: www.pioneermanagementllc.com

WATERLINE DETAILS
FOR THE
FINAL SUBDIVISION AND LAND DEVELOPMENT PLAN OF
MAPLEDALE ESTATES
NORTH LEBANON TOWNSHIP LEBANON COUNTY, PA.

DATE: FEB. 25, 2021
SHEET NO. 27 OF 36
DWG. NO. 18-2000-01-B

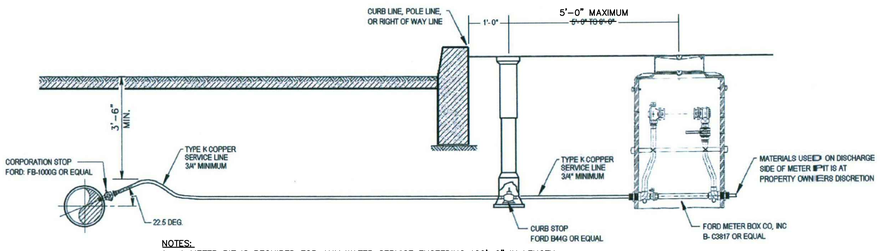

NOTES:
1. A METER PIT IS REQUIRED FOR ANY WATER SERVICE EXCEEDING 100'-0" IN LENGTH.
2. ANY WATER SERVICE CONNECTIONS AT THE MAIN ARE REQUIRED TO BE OF COPPER 3/4" OR GREATER. IF SERVICE BEING REPLACED IS LARGER, REPLACE WITH SAME SIZE.
3. CURB STOP LOCATION: 3'-0" MINIMUM BEYOND ROAD EDGE OR NO MORE THAN 1'-0" BEHIND CURB LINE.
4. METER PIT LOCATION: 5'-0" MAXIMUM BEHIND CURB STOP.
5. IT IS THE DISCRETION OF THE PROPERTY OWNER AS TO SERVICE LINE MATERIALS USED ON OWNER'S SIDE OF THE METER PIT.
6. ANY VALVE BOXES LOCATED IN ROADWAY OR TRAFFIC AREAS ARE REQUIRED TO BE "ROADWAY BOXES."
7. ANY METER PITS INSTALLED IN ROADWAY OR TRAFFIC AREAS ARE REQUIRED TO BE MADE OF CONCRETE.

TYPICAL WATER SERVICE WITH METER PIT CONNECTION DETAIL
NOT TO SCALE

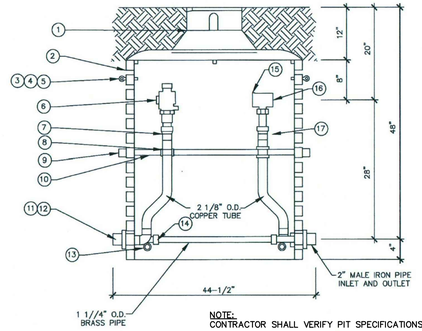

ITEM	DESCRIPTION
1	WABASH COVER AND EXTENSION RING
2	36" CORRUGATED PVC PIT FOR DOUBLE LID
3	EYE BOLT
4	FLAT WASHER
5	NUT
6	ANGLE BALL VALVE
7	SOLDER BUSHING
8	PLASTIC TIE
9	1" PVC CAP
10	1" PVC SUPPORT
11	NIPPLE
12	LOCK NUT
13	TEE
14	BALL VALVE
15	METER ADAPTER/PAIR
16	ANGLE DUAL CHECK VALVE
17	BALL VALVE

NOTE:
CONTRACTOR SHALL VERIFY PIT SPECIFICATIONS WITH CITY OF LEBANON AUTHORITY BEFORE OPERATING.

METER PIT DETAIL
NOT TO SCALE

NOTE:
CLAY DIKE SHALL CONSIST OF CLAY CONTAINING NO MORE THAN 15% (BY VOLUME) STONE NO LARGER THAN TWO (2) INCHES IN DIAMETER. CLAY SHALL BE PLACED IN SIX (6) INCH LIFTS AND COMPACTED BY A MECHANICAL TAMPER TO NOT LESS THAN 95% OF MAXIMUM DENSITY AT OPTIMUM MOISTURE CONTENT.

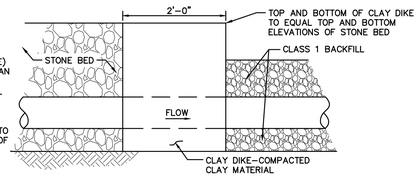

CLAY DIKE
NOT TO SCALE

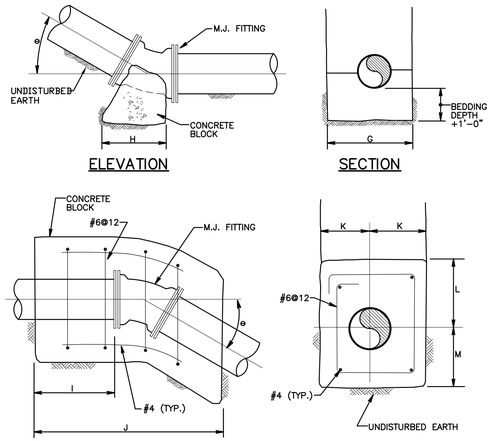

ELEVATION — SECTION

ELEVATION — SECTION

TYPICAL VERTICAL REACTION BACKINGS
NOT TO SCALE

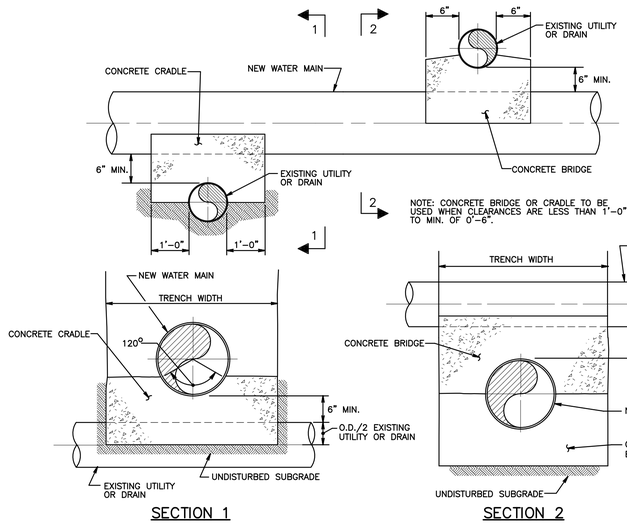

SECTION 1 — SECTION 2

CONCRETE CRADLE AND CONCRETE BRIDGE DETAIL
NOT TO SCALE

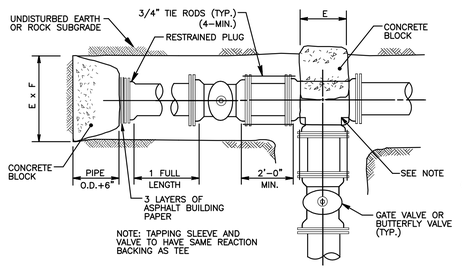

PLUG AND TEE OR TAPPING SLEEVE

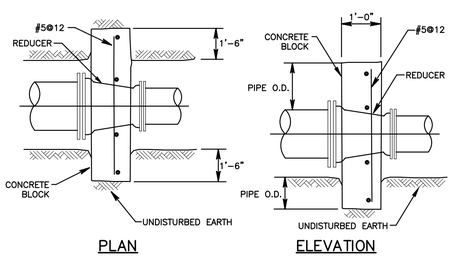

PLAN — ELEVATION

REDUCER

90° BEND — 45° BEND

22.5° BEND — 11.25° BEND

NOTES:
1. REACTION BACKING DIMENSIONS HAVE BEEN CALCULATED USING A SOIL BEARING CAPACITY OF 2000 POUNDS PER SQUARE FOOT AND TEST PRESSURES AS INDICATED.
2. ALL FITTINGS SHALL BE MECHANICAL JOINT AND SHALL HAVE WEDGE ACTION FOLLOWER GLANDS INSTALLED TO MANUFACTURERS SPECIFICATIONS, EXCEPT IN RESTRAINED JOINT AREAS.
3. ALL CONCRETE SHALL BE HIGH EARLY STRENGTH.

TYPICAL HORIZONTAL BENDS & REACTION BACKINGS
NOT TO SCALE

TABLE OF REACTION BACKING DIMENSIONS

PIPE DIA.	TEST PRESSURE (PSI)	A	B	C	D	E	F	G	H			I			J			K	L	M
									45	22½	11¼	45	22½	11¼	45	22½	11¼			
24"	150	11'-0"	6'-0"	3'-0"	1'-8"	8'-0"	5'-0"	4'-0"	7'-6"	3'-9"	2'-0"	9'-0"	4'-0"	1'-6"	20'-0"	0'-0"	5'-0"	2'-0"	3'-0"	2'-0"
20"	150	8'-8"	4'-8"	2'-6"	1'-4"	6'-3"	4'-0"	3'-8"	5'-9"	3'-0"	1'-6"	8'-6"	3'-6"	1'-6"	16'-4"	8'-4"	4'-3"	1'-10½"	2'-10"	1'-10"
16"	150	6'-2"	3'-6"	2'-0"	1'-0"	4'-3"	4'-0"	3'-4"	4'-3"	2'-2"	1'-2"	5'-6"	2'-6"	0'-10½"	12'-6"	6'-3"	3'-1"	1'-8"	2'-8"	1'-8"
12"	150	5'-0"	2'-8"	1'-3"	1'-0"	3'-6"	3'-0"	3'-0"	2'-8"	1'-4"	1'-0"	3'-6"	1'-8"	0'-9"	8'-9"	4'-6"	2'-3"	1'-6"	2'-6"	1'-6"
10"	150	4'-3"	2'-6"	1'-6"	1'-0"	3'-0"	2'-6"	2'-10"	2'-2"	1'-2"	1'-0"	3'-9"	1'-0"	0'-3"	7'-0"	3'-6"	2'-0"	1'-5"	2'-5"	1'-5"
8"	150	3'-6"	2'-0"	1'-0"	1'-0"	2'-6"	2'-0"	2'-8"	1'-6"	1'-0"	1'-0"	1'-10"	0'-6"	0'-4"	5'-0"	2'-6"	2'-0"	1'-4"	2'-4"	1'-4"
6"	150	2'-8"	1'-6"	1'-0"	1'-0"	2'-0"	1'-6"	2'-6"	1'-0"	1'-0"	1'-0"	1'-0"	0'-6"	0'-4"	3'-0"	2'-0"	2'-0"	1'-3"	2'-3"	1'-3"
4"	150	2'-0"	1'-0"	1'-0"	1'-0"	1'-0"	1'-0"	2'-4"	1'-0"	1'-0"	1'-0"	0'-4"	0'-4"	0'-4"	2'-0"	2'-0"	2'-0"	1'-3"	2'-2"	1'-2"

REACTION BACKING DETAIL
NOT TO SCALE

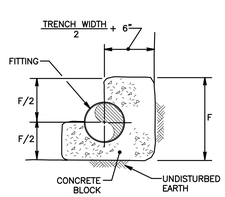

SECTION

NO.	DATE	REVISION
3	12-21-21	REVISED PER N. LEB. TWP., LEB. CNTY. ENG. & THE REVISED WALL DESIGN
2	9-29-21	REVISED PER SEWER AUTH., N. LEB. TWP., LEB. CNTY. ENG. & THE REVISED WALL DESIGN
1	6-18-21	REVISED PER LCCD, DEP, SEWER AUTH., N. LEB. TWP., & LCPD

FOR PIONEER MANAGEMENT BY:

SURV. CHIEF: | FIELDBOOK NO.

DRAWN BY: JDB/MLS | CHKD BY: JCH

MANAGER: JAMES C. HENKE

DESIGN BY: JDB/KWG | CHKD BY: JDB/JCH

DRAWING REFERENCE: F:\18\18-2000-01\CAD\Final Plan\Details.dwg

XREFS: TB: [F:\18\18-2000-01\CAD\Final Plan\XX-Mech\TB.dwg]

CLIENT
MR. S. GERALD MUSSER
144 BELL ROAD
PALMYRA, PA 17078
(717) 821-1129

SCALE: AS NOTED

PIONEER
Management, LLC
111 Millersville Road, Lancaster, PA 17603
Phone: 717.481.4955 Fax: 717.481.4955
Email: info@pioneermanagementllc.com
Website: www.pioneermanagementllc.com

WATERLINE DETAILS

FOR THE
FINAL SUBDIVISION AND LAND DEVELOPMENT PLAN OF
MAPLEDALE ESTATES
NORTH LEBANON TOWNSHIP — LEBANON COUNTY, PA.

DATE: FEB. 25, 2021

SHEET NO. 28 OF 36

DWG. NO. 18-2000-01-B

P:\18-2000-01\CAD\Final Plan Details.dwg, 29 SITE CONSTRUCTION DETAILS, 12/21/2021 1:55:55 PM, 1:1

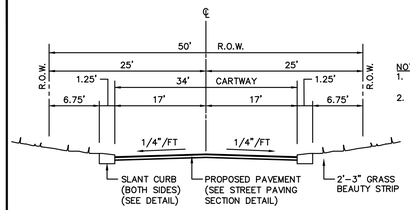

TYPICAL STREET CROSS SECTION

NOT TO SCALE



COLOR: LEGEND AND BORDER BACKGROUND — WHITE (HIGH RETRO REFLECTIVE TYPE 3) GREEN (HIGH RETRO REFLECTIVE TYPE 3)

NOTES:
1. SIGN CODES REFERENCED IN THESE PLANS ARE PER SIGN STANDARDS OF THE "MANUAL ON UNIFORM TRAFFIC CONTROL DEVICES".
2. ACTUAL SIZE & STYLE MAY VARY BASED ON THE TOWNSHIP'S PREFERENCE.

STREET NAME SIGN – D3-1

NOT TO SCALE

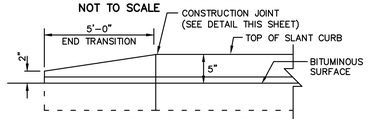

END SLANT CURB TRANSITION

NOT TO SCALE

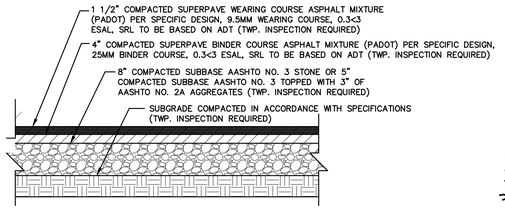

NOTES:
1. ALL SPECIFIED MATERIALS THICKNESS IS FULLY COMPACTED DEPTH.
2. ALL STREETS AND STREET RELATED IMPROVEMENTS MUST MEET THE TOWNSHIP REGULATIONS PER SECTION 103 – ROADWAY PAVEMENT SECTION.

STREET PAVING SECTION DETAIL

NOT TO SCALE

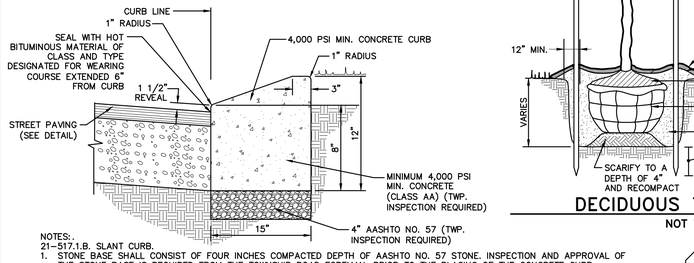

NOTES:
21-517.1.B. SLANT CURB.
1. STONE BASE SHALL CONSIST OF FOUR INCHES COMPACTED DEPTH OF AASHTO NO. 57 STONE. INSPECTION AND APPROVAL OF THE STONE BASE IS REQUIRED FROM THE TOWNSHIP ROAD FOREMAN, PRIOR TO THE PLACING OF THE CONCRETE CURB.
2. WIDTH OF CURB TO BE 15 INCHES.
3. STREET SIDE HEIGHT OF CURB TO BE EIGHT INCHES, WITH A FINISHED REVEAL OF 1.5 INCHES.
4. HOUSE SIDE HEIGHT OF CURB TO BE 12 INCHES.
5. TYPE OF MATERIAL TO BE USED IS CLASS AA CEMENT CONCRETE – 4,000–PSI (TWENTY–EIGHT–DAY STRUCTURAL DESIGN COMPRESSIVE STRENGTH) CONCRETE.
6. CONTRACTION JOINTS (SAW CUTS) EVERY 10 FEET AND AT THE BEGINNING OF CURB TRANSITIONS FOR STRUCTURES. CONTRACTION JOINTS SHALL BE TWO INCHES DEEP BY 3/16 INCH WIDE AND BE SEALED AS PER THE LATEST VERSION OF THE COMMONWEALTH OF PENNSYLVANIA, DEPARTMENT OF TRANSPORTATION, SPECIFICATIONS, PUBLICATION 408, SECTION 501.3(N).
7. EXPANSION JOINTS EVERY 50 FEET, AT STRUCTURES AND AT THE END OF WORKDAY. EXPANSION JOINTS SHALL BE THE FULL CROSS–SECTION AREA OF THE CURB AND BE 3/4 INCH WIDE AND BE SEALED WITH 3/4 INCH PREMOLDED EXPANSION JOINT MATERIAL FOR THE FULL CROSS–SECTIONAL AREA OF THE CURB. PREMOLDED EXPANSION JOINT MATERIAL SHALL CONFORM TO THE LATEST VERSION OF THE COMMONWEALTH OF PENNSYLVANIA, DEPARTMENT OF TRANSPORTATION, SPECIFICATIONS, PUBLICATION 408, SECTION 705.1.
8. CURBING SHALL BE FREE OF ANY STRESS CRACKS OR ANY OTHER DEFORMITIES.
9. AFTER INSTALLATION OF THE CURBING, NO BORINGS OR CUTS CAN BE MADE BY THE DEVELOPER WITHOUT PERMISSION OF NORTH LEBANON TOWNSHIP. TO ALLOW VERIFICATION OF PROPER RESTORATION, THE ROAD FOREMAN, OR DESIGNATED AGENT, MUST BE PRESENT DURING ANY PERMITTED CUTS OR BORINGS. ANY CUTS OR BORINGS MADE WITHOUT TOWNSHIP AUTHORIZATION WILL BE REQUIRED TO BE RE–EXCAVATED, AT THE DEVELOPER'S EXPENSE, TO ALLOW VERIFICATION OF PROPER RESTORATION. THE STREET SYSTEM WILL NOT BE ACCEPTED UNLESS INSPECTIONS ARE MADE AND APPROVAL IS GRANTED BY NORTH LEBANON TOWNSHIP.
10. WHEN WEARING COURSE IS PLACED ADJACENT TO CURBS TO FORM A BITUMINOUS GUTTER, SEAL WITH HOT BITUMINOUS MATERIAL OF THE CLASS AND TYPE DESIGNATED FOR THE WEARING COURSE, EXTENDING SIX INCHES FROM THE CURB, APPLIED EVENLY. A SIMILAR SEAL SHALL BE PROVIDED ALONG THE WEARING COURSE CONTACT WITH STRUCTURES SUCH AS MANHOLES, INLETS, ETC. SEAL MATERIALS SHALL CONFORM TO THE LATEST VERSION OF THE COMMONWEALTH OF PENNSYLVANIA, DEPARTMENT OF TRANSPORTATION, SPECIFICATIONS, PUBLICATION 408, SECTION 401.3(G).

TYPICAL SLANT CURB DETAIL

NOT TO SCALE

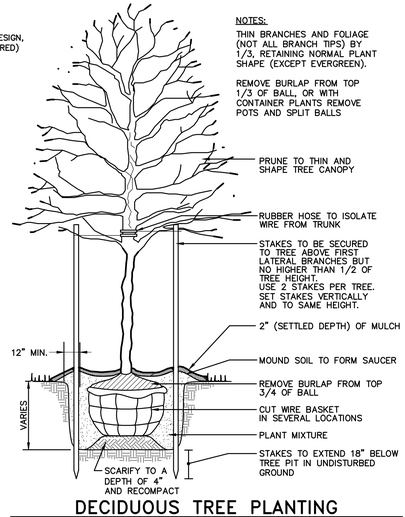

NOTES:
THIN BRANCHES AND FOLIAGE (NOT ALL BRANCH TIPS) BY 1/3, RETAINING NORMAL PLANT SHAPE (EXCEPT EVERGREEN).

REMOVE BURLAP FROM TOP 1/3 OF BALL, OR WITH CONTAINER PLANTS REMOVE POTS AND SPLIT BALLS

PRUNE TO THIN AND SHAPE TREE CANOPY

RUBBER HOSE TO ISOLATE WIRE FROM TRUNK

STAKES TO BE SECURED TO TREE ABOVE FIRST LATERAL BRANCHES BUT NO HIGHER THAN 1/2 OF TREE HEIGHT. USE 2 STAKES PER TREE. SET STAKES VERTICALLY AND TO SAME HEIGHT.

2" (SETTLED DEPTH) OF MULCH

MOUND SOIL TO FORM SAUCER

REMOVE BURLAP FROM TOP 3/4 OF BALL

CUT WIRE BASKET IN SEVERAL LOCATIONS

PLANT MIXTURE

STAKES TO EXTEND 18" BELOW TREE PIT IN UNDISTURBED GROUND

DECIDUOUS TREE PLANTING

NOT TO SCALE

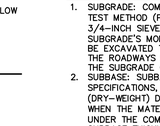

R1–1 WHITE ON RED 30"x30"

LEGEND AND BORDER COLOR: WHITE (HIGH RETRO REFLECTIVE TYPE 3) BACKGROUND COLOR: RED (HIGH RETRO REFLECTIVE TYPE 3)

NOTE: SIGN CODES REFERENCED IN THESE PLANS ARE PER SIGN STANDARDS OF THE "MANUAL ON UNIFORM TRAFFIC CONTROL DEVICES".

STOP SIGN – R1–1

NOT TO SCALE

REFER TO HOP PLAN

TYPICAL VERTICAL CURB DETAIL

NOT TO SCALE

REFER TO HOP PLAN

END VERTICAL CURB TRANSITION

NOT TO SCALE

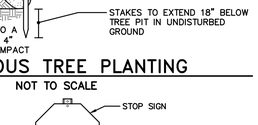

NOTES:
1. ALL SIGNAGE SHALL COINCIDE WITH THE ENGINEERING AND TRAFFIC STUDY DATA, TITLE 67 OF THE PENNDOT RULES & REGULATIONS, THE MUTCD AND NORTH LEBANON TOWNSHIP.
2. ALL SIGN POSTS SHALL HAVE A BREAKAWAY BASE DESIGN.

SIGN POST DETAIL

NOT TO SCALE

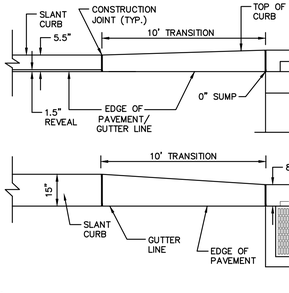

NOTES:
1. DO NOT PRUNE EVERGREENS EXCEPT TO REMOVE DAMAGED BRANCHES
2. THIN BRANCHES AND FOLIAGE (NOT ALL BRANCH TIPS) BY 1/3, RETAINING NORMAL PLANT SHAPE (EXCEPT EVERGREEN).
3. REMOVE BURLAP FROM TOP 1/3 OF BALL, OR WITH CONTAINER PLANTS REMOVE POTS AND SPLIT BALLS

SHRUB PLANTING

NOT TO SCALE

ROAD COMPACTION NOTES

1. SUBGRADE: COMPACT SUBGRADE TO NOT LESS THAN 100% OF THE DETERMINED DRY–MASS (DRY–WEIGHT) DENSITY. THE DETERMINED DRY–MASS (DRY–WEIGHT) DENSITY SHOULD BE DETERMINED BY THE PENNSYLVANIA TEST METHOD (PTM) NO. 106 – METHOD B, PTM NO. 112, OR PTM NO. 402 FOR EACH 3,000 SQUARE YARDS OR LESS OF COMPLETED SUBGRADE. WHEN THE MATERIAL IS TOO COARSE (MORE THAN 20% RETAINED ON A 3/4–INCH SIEVE) TO UTILIZE THE PTM METHODS, COMPACTION SHOULD BE DETERMINED BASED ON THE NONMOVEMENT OF THE SUBGRADE MATERIAL UNDER THE COMPACTION EQUIPMENT. WHEN COMPACTING, THE SUBGRADE MOISTURE CONTENT SHOULD BE MAINTAINED TO NOT MORE THAN 2% ABOVE OPTIMUM MOISTURE FOR THE MATERIAL. WHEN THE SPECIFIED COMPACTION CANNOT BE OBTAINED, THE SUBGRADE MATERIAL SHALL BE EXCAVATED TO A DEPTH THAT WHEN REPLACED AND RECOMPACTED AT MOISTURE CONTENT NOT EXCEEDING OPTIMUM, THE SUBGRADE SHALL HAVE REQUIRED COMPACTION. IMMEDIATELY PRIOR TO THE PLACEMENT OF THE ROADWAYS STONE SUBBASE, THE SUBGRADE SHALL BE RECOMPACTED AND RESHAPED TO PROVIDE THE REQUIRED ROADWAY SUBGRADE COMPACTION AND ELEVATION. INSPECTION IS REQUIRED AT THE COMPLETION OF THE SUBGRADE COMPACTION BY THE TOWNSHIP ROAD FOREMAN OR HIS DELEGATE. ALL INSPECTIONS WILL REQUIRE A MINIMUM OF 24–HOUR NOTICE TO THE TOWNSHIP.
2. SUBBASE: SUBBASE MATERIAL SHALL CONSIST OF TYPE C OR BETTER, NO. 2A AND NO. 3 AGGREGATES AS SPECIFIED IN THE LATEST VERSION OF THE COMMONWEALTH OF PENNSYLVANIA, DEPARTMENT OF TRANSPORTATION, SPECIFICATIONS, PUBLICATION 408, SECTION 703.2. COMPACT THE UNIFORMLY SPREAD SUBBASE MATERIAL TO NOT LESS THAN 100% OF THE MAXIMUM DRY–MASS (DRY–WEIGHT) DENSITY. THE DETERMINED DRY–MASS (DRY–WEIGHT) DENSITY SHOULD BE DETERMINED BY THE PENNSYLVANIA TEST METHOD (PTM) NO. 106 – METHOD B, PTM NO. 112, OR PTM NO. 402 FOR EACH 3,000 SQUARE YARDS OR LESS OF COMPLETED SUBBASE. WHEN THE MATERIAL IS TOO COARSE (MORE THAN 20% RETAINED ON A 3/4–INCH SIEVE) TO UTILIZE THE PTM METHODS, COMPACTION SHOULD BE DETERMINED BASED ON THE NONMOVEMENT OF THE SUBBASE MATERIAL UNDER THE COMPACTION EQUIPMENT. COMPACTION OF THE SUBBASE SHALL BE INSTALLED IN MAXIMUM 4" LAYERS OF NO. 2A OR A MAXIMUM 5" LAYER OF NO. 3 (COMPACTED THICKNESS), UNTIL THE TOTAL REQUIRED SUBBASE THICKNESS IS ACHIEVED. COMPACTION SHALL PROCEED GRADUALLY FROM SIDES TO CENTER, WITH THE SUCCEEDING PASS UNIFORMLY OVERLAPPING THE PREVIOUS PASS, WHICH SHALL CONTINUE UNTIL THE SUBBASE IS PROPERLY COMPACTED AND SHAPED. IF THE SUBBASE MATERIAL DOES NOT CONTAIN SUFFICIENT MOISTURE AFTER PLACEMENT, ADD WATER TO OBTAIN THE PROPER COMPACTION. IMMEDIATELY PRIOR TO THE PLACEMENT OF THE ROADWAY PAVEMENT, THE SUBBASE SHALL BE RECOMPACTED AND RESHAPED TO PROVIDE THE REQUIRED ROADWAY SUBBASE COMPACTION AND ELEVATION. INSPECTION IS REQUIRED AT THE COMPLETION OF THE SUBBASE COMPACTION BY THE TOWNSHIP ROAD FOREMAN OR HIS DELEGATE. ALL INSPECTIONS WILL REQUIRE A MINIMUM OF 24–HOUR NOTICE TO THE TOWNSHIP.
3. PLANT MIXED BITUMINOUS CONCRETE COURSES – WEATHER LIMITATIONS: DO NOT PLACE BITUMINOUS PAVING MIXTURES BETWEEN OCTOBER 31 AND APRIL 1 FOR BASE COURSE PAVEMENT AND STANDARD WEARING COURSE PAVEMENT, UNLESS OTHERWISE PERMITTED IN WRITING BY AUTHORIZED TOWNSHIP PERSONNEL. DO NOT PLACE SUPER PAVE WEARING COURSES FROM OCTOBER 16 TO APRIL 1 UNLESS OTHERWISE PERMITTED IN WRITING BY AUTHORIZED TOWNSHIP PERSONNEL. DO NOT PLACE BITUMINOUS PAVING MIXTURES WHEN SURFACES ARE WET OR WHEN THE TEMPERATURE OF EITHER THE AIR OR THE SURFACE ON WHICH THE MIXTURE IS TO PLACE IS 40°F (4°C) OR LOWER. WHEN WORK IS HALTED BECAUSE OF WEATHER CONDITIONS, LIMITED QUANTITIES EN ROUTE TO THE PROJECT MAY BE PLACED, IF PERMITTED BY THE TOWNSHIP ROAD FOREMAN.
4. BASE COURSE PAVEMENT: BASE COURSE PAVING MATERIAL SHALL CONFORM TO LATEST VERSION OF THE COMMONWEALTH OF PENNSYLVANIA, DEPARTMENT OF TRANSPORTATION, SPECIFICATIONS, PUBLICATION 408, SECTION 409.2 AND SECTION 421.2. BASE COURSE PAVING SHALL CONFORM TO THE ABOVE MENTIONED WEATHER LIMITATIONS. THE BASE COURSE PAVEMENT SHALL BE INSTALLED IN A MAXIMUM OF 2" ROLLED LAYERS, UNTIL THE TOTAL REQUIRED BASE COURSE DEPTH IS ACHIEVED. NINETY PERCENT (90%) OF ALL THE LOTS MUST BE DEVELOPED AND A MINIMUM OF ONE (1) YEAR MUST ELAPSE FROM THE INSTALLATION OF THE BASE COURSE PAVING PRIOR TO THE INSTALLATION OF THE WEARING COURSE. INSPECTION IS REQUIRED BY THE TOWNSHIP ROAD FOREMAN OR HIS DELEGATE DURING THE BITUMINOUS PLACEMENTS. ALL INSPECTIONS WILL REQUIRE A MINIMUM OF 24–HOUR NOTICE TO THE TOWNSHIP.
AFTER INSTALLATION OF BASE COURSE NO STREET CUTS CAN BE MADE BY THE DEVELOPER WITHOUT THE PERMISSION OF NORTH LEBANON TOWNSHIP ROAD FOREMAN OR SUPERVISORS. A STREET CUT PERMIT IS REQUIRED. THE ROAD FOREMAN, OR DESIGNATED AGENT, MUST BE PRESENT DURING ANY PERMITTED CUTS FOR PROPER RESTORATION. ANY CUTS MADE WITHOUT AUTHORIZATION BY THE TOWNSHIP WILL BE REQUIRED TO BE REDUG, AT THE DEVELOPER'S EXPENSE, SO VERIFICATION CAN BE MADE ON PROPER RESTORATION.
5. BITUMINOUS TACK COAT: PRIOR TO THE PLACEMENT OF THE WEARING COURSE, THE BASE COURSE SHALL BE CONDITIONED AND TREATED WITH THE APPLICATION OF A BITUMINOUS BONDING MATERIAL CONFORMING TO THE LATEST VERSION OF THE COMMONWEALTH OF PENNSYLVANIA, DEPARTMENT OF TRANSPORTATION, SPECIFICATIONS, PUBLICATION 408, SECTION 460. APPLY THE EMULSIFIED ASPHALT TACK COAT AT A RATE TO LEAVE A UNIFORM ASPHALT RESIDUE FROM 0.02 TO 0.07 GALLONS PER SQUARE YARD, OR AS APPROVED BY THE TOWNSHIP ROAD FOREMAN. APPLY THE TACK COAT ONLY WHEN THE AIR TEMPERATURE IS 4°C (40°F) AND RISING. DO NOT APPLY TO A WET SURFACE, OR DURING WET WEATHER. FOLLOWING APPLICATION AND PRIOR TO SUCCEEDING CONSTRUCTION, ALLOW THE TACK COAT TO CURE, WITHOUT BEING DISTURBED, UNTIL THE WATER HAS COMPLETELY SEPARATED AND EVAPORATED, AS DETERMINED BY THE TOWNSHIP ROAD FOREMAN. INSPECTION IS REQUIRED BY THE TOWNSHIP ROAD FOREMAN OR HIS DELEGATE DURING THE BITUMINOUS PLACEMENTS. ALL INSPECTIONS WILL REQUIRE A MINIMUM OF 24–HOUR NOTICE TO THE TOWNSHIP.
6. WEARING COURSE PAVEMENT: NINETY PERCENT (90%) OF ALL THE LOTS MUST BE DEVELOPED AND A MINIMUM OF ONE (1) YEAR MUST ELAPSE FROM THE INSTALLATION OF THE BASE COURSE PAVING PRIOR TO THE INSTALLATION OF THE WEARING COURSE. WEARING COURSE PAVING MATERIAL SHALL CONFORM TO THE LATEST VERSION OF THE COMMONWEALTH OF PENNSYLVANIA, DEPARTMENT OF TRANSPORTATION, SPECIFICATIONS, PUBLICATION 408, SECTION 409.2 AND SECTION 420.2. WEARING COURSE PAVING SHALL CONFORM TO THE ABOVE MENTIONED WEATHER LIMITATIONS. PRIOR TO THE PLACEMENT OF THE WEARING COURSE PAVING, ALL DEFICIENCIES IN THE BASE COURSE PAVING MUST BE REPAIRED. PRIOR TO THE PLACEMENT OF THE WEARING COURSE A BITUMINOUS TACK COAT SHALL BE APPLIED TO THE BASE COURSE PAVEMENT. WEARING COURSE PAVING SHALL NOT BE COMPLETED IF IT WILL BE SUBJECTED TO HIGH TEMPERATURES OR CHANNELIZED TRAFFIC FOR EXTENDED PERIODS OF TIME. INSPECTION IS REQUIRED BY THE TOWNSHIP ROAD FOREMAN OR HIS DELEGATE DURING THE BITUMINOUS PLACEMENTS. ALL INSPECTIONS WILL REQUIRE A MINIMUM OF 24–HOUR NOTICE TO THE TOWNSHIP.

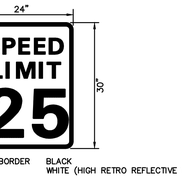

0.080" ALUMINUM WITH HIGH RETRO REFLECTIVE TYPE 3, UNLESS OTHERWISE NOTED

COLOR: LEGEND AND BORDER BACKGROUND — BLACK WHITE (HIGH RETRO REFLECTIVE TYPE 3)

NOTES:
1. SIGN CODES REFERENCED IN THESE PLANS ARE PER SIGN STANDARDS OF THE "MANUAL ON UNIFORM TRAFFIC CONTROL DEVICES".
2. ACTUAL SIZE & STYLE MAY VARY BASED ON THE TOWNSHIP'S PREFERENCE.

SPEED LIMIT SIGN – R2–1

NOT TO SCALE

REFER TO HOP PLAN

TYPICAL MAPLE ST. SHOULDER IMPROVEMENT & STREET PAVING SECTION DETAIL

NOT TO SCALE

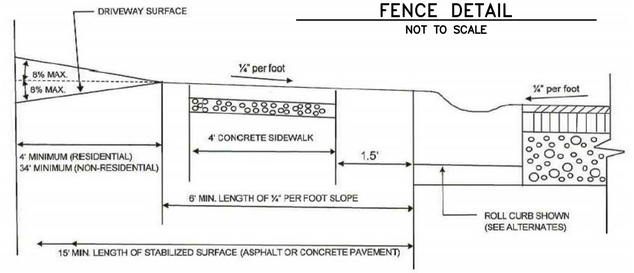

TYPICAL DRIVEWAY PROFILE FOR CURBED ROADWAY

NOT TO SCALE

Residential Aluminum Fencing • Morgan 2000 Series



The 2000 Series is Morgan's residential series of aluminum fencing. It is constructed in six foot assembled sections, comes in spring steel. Gates are available for each aluminum fencing style style. Options for the 2000 Series of aluminum fencing include three fabrications, and shortpickets.

Morgan 2000 Series Aluminum Fencing Features:

6'on Center - Assembled Sections
Powder Coating - AAMA 2604 Super Durable
T.O.U.C. Finish Coated
Picket - .98" X .98"
Picket Spacing - 3.19" between pickets
Rails - 20" & 6" Stiffs
Concave Sections Available
Convex Sections Available
No Visible Screws (optional)
Matte Picket Finishes (paint pending)
Colors - Black, Bronze or White available in all styles
Additional colors available for a small fee
Flag Assemblies (optional)
Designer Series Rails
Short Picket Option is available in all styles

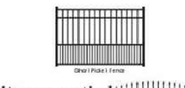

Unique Packaging –
Each section is packed vertically for less damage and stored in heavy plastic to eliminate scratching

Both flat top and arched gates are available in 2000 Series Aluminum Fencing, in all heights up to 72" and widths up to 15'

FENCE NOTES:
1. DESIGN ELEMENTS SUCH AS FENCE STYLE, HEIGHT, COLOR, MATERIAL, ETC. SHALL BE DETERMINED BY DEVELOPER.
2. PLACEMENT AND HEIGHT OF THE FENCE SHALL FOLLOW ANY CURRENT REGULATIONS REQUIRED BY NORTH LEBANON TOWNSHIP, ADA GUIDELINES AND BUILDING CODE REQUIREMENTS WHERE APPLICABLE.
3. THE DESIGN AND/OR MANUFACTURER OF THE FENCE MAY BE SUBSTITUTED BY AN ALTERNATIVE DESIGN AND/OR MANUFACTURER WHEN APPROVED BY THE TOWNSHIP.

FENCE DETAIL

NOT TO SCALE

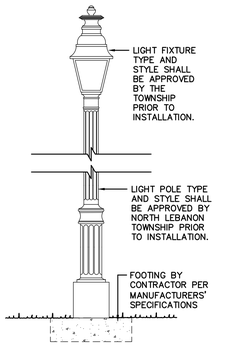

SECTION 113 – STREET LIGHTS
1. WHEN REQUIRED BY THE TOWNSHIP, ALL STREET LIGHTS WILL BE INSTALLED BY MET–ED (FIRST ENERGY) WITH THE DEVELOPER PAYING FOR ALL THE MATERIAL AND LABOR COST. THE DEVELOPER MUST USE THE COLONIAL STYLE POST TOP AND POLE OFFERED BY MET–ED (FIRST ENERGY). MET–ED (FIRST ENERGY) STILL OWNS AND MAINTAINS THE SYSTEM. A MINIMUM 90–WATT LED LIGHT IS REQUIRED. THE LIGHTS SHALL BE SHOWN ON THE SUBDIVISION PLAN AT INTERVALS OF NOT MORE THAN 200 FEET AND ARE SUBJECT TO APPROVAL BY MET–ED (FIRST ENERGY) AND THE TOWNSHIP. A SEPARATE SHEET SHALL REFLECT THE PROPOSED STREET LIGHT LAYOUT WITH DISTANCES BETWEEN LIGHTS SHOWN AND LOT WIDTHS AT CURB TO DETERMINE FUTURE STREET LIGHT ASSESSMENT COSTS.
2. IT IS MET–ED'S POLICY TO ENERGIZE THE LIGHTS UPON INSTALLATION IN NORTH LEBANON TOWNSHIP. THE DEVELOPER WILL BE RESPONSIBLE FOR ALL COSTS, INCLUDING ENERGY COSTS UNTIL SUCH TIME AS THE STREET IS DEDICATED AND ACCEPTED BY THE TOWNSHIP. STREET LIGHT ASSESSMENT IS BASED ON FRONT FOOT ASSESSMENT.
3. THE DEVELOPER IS REQUIRED TO PROVIDE A LOCKING MECHANISM AT THE BOX THAT HOUSES THE SWITCH FOR THE STREET LIGHTS. THE LOCKING MECHANISM MUST BE APPROVED BY THE ROADMASTER OF NORTH LEBANON TOWNSHIP PRIOR TO INSTALLATION.
4. AS BUILT DRAWINGS ARE REQUIRED FOR ALL STREET LIGHTS, WIRING AND DISCONNECT SWITCHES.

EXHIBIT "J"
1. (LED) – MET–ED INSTALLS A STANDARD STYLE POST–TOP LED STREET LIGHT AND POLE, WITH A $2,000 UP–FRONT CASH CONTRIBUTION FOR CAPITAL COSTS TO INSTALL THE UNIT. MET–ED OWNS AND MAINTAINS THE SYSTEM. A 90–WATT, COLONIAL STREET LIGHT AND POLE COSTS APPROXIMATELY $14.83 A MONTH PER LIGHT. UNDER THIS OPTION, MET–ED WILL PROVIDE FIXTURE AND PHOTOCELL MAINTENANCE. ANY OTHER REPAIR, REPLACEMENT, OR MAINTENANCE THAT IS NEEDED (POLE, WIRE, ETC.) WILL BE INVOICED AT THE TIME OF COMPLETION.
2. THE CUSTOMER IS RESPONSIBLE FOR INSTALLING 18–INCH, BLACK, CORRUGATED, DRAIN PIPE TO BE 4–FEET DEEP. AFTER THE WIRES ARE INSTALLED, THE CUSTOMER MUST BACKFILL WITH SCREENINGS AROUND THE TUBING.
3. THE DEVELOPER, HOA OR MUNICIPALITY IS RESPONSIBLE FOR THE DIGGING AND BACKFILLING OF THE WIRE TRENCHES, AS WELL AS ANY REPAIRS TO LAWNS, SIDEWALKS, DRIVEWAYS, ETC. THE DEVELOPER OR MUNICIPALITY IS RESPONSIBLE FOR ANY STREET LIGHT FOUNDATION COST WHETHER INSTALLED BY THEM OR MET–ED.
4. THE PRICE QUOTE INDICATED ABOVE REFLECT MET–ED'S MOST RECENT PRICE TO COMPARE (3/1/16–5/31/16) FOR ELECTRIC OF $0.076010 PER KWH. IF ANOTHER SUPPLIER HAS BEEN CHOSEN, THIS PRICE WILL DIFFER.
5. PLEASE NOT THAT MED–ED DOES OFFER OTHER OPTIONS, HOWEVER, NORTH LEBANON TOWNSHIP REQUIRES ALL DEVELOPERS TO UTILIZE OPTION 5 (EXHIBIT "J" – NOTE #1) AS LISTED ABOVE.

STREET LIGHT DETAIL

NOT TO SCALE

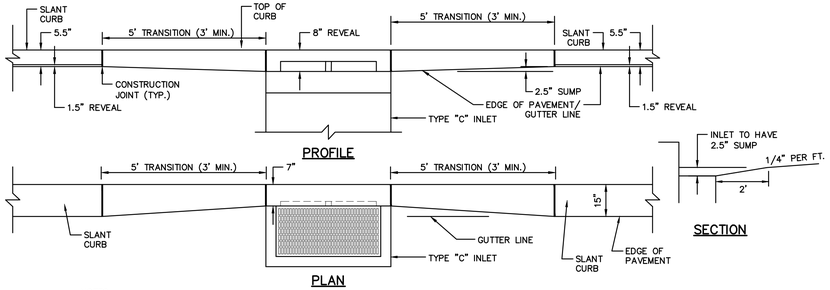

NOTES:
1. THIS DETAIL IS INTENDED FOR I–6, I–7, I–26 AND I–27 ONLY.
2. THIS DETAIL SPECIFIES HORIZONTAL ALIGNMENT OF THE BACK OF CURB BEING CONCENTRIC WITH THE BACK OF INLET HOOD.
3. THIS DETAIL SPECIFIES VERTICAL ALIGNMENT OF THE TOP OF CURB BEING ALIGNED WITH THE TOP OF THE HOOD OF THE INLET.

TRANSITION DETAIL – SLANT CURB TO TYPE–C INLET FOR LOW POINT INLETS (EAST MAPLE STREET: I–6, I–7, I–26 & I–27)

NOT TO SCALE

NOTES:
1. THIS DETAIL IS INTENDED FOR I–20 AND I–21 ONLY.
2. THIS DETAIL SPECIFIES HORIZONTAL ALIGNMENT OF THE FACE OF CURB BEING CONCENTRIC WITH THE FACE OF INLET HOOD.
3. THIS DETAIL SPECIFIES VERTICAL ALIGNMENT OF THE BOTTOM OF CURB/GUTTER LINE BEING ALIGNED WITH THE BOTTOM OF THE HOOD/TOP OF GRATE OF THE INLET. THEREFOR THERE IS NO SUMP PROPOSED FOR THESE INLETS.

TRANSITION DETAIL – SLANT CURB TO TYPE–C INLET TO VERTICAL CURB (EAST MAPLE STREET: I–20 & I–21)

NOT TO SCALE

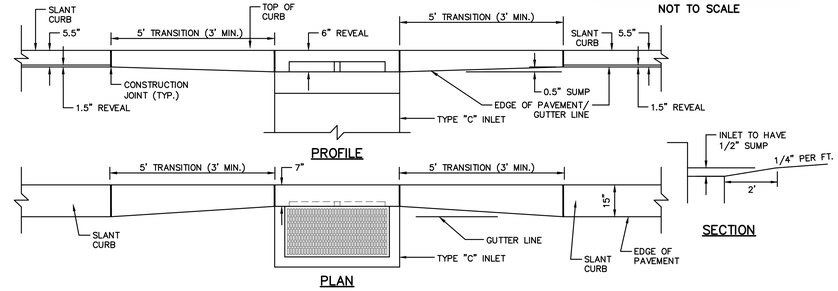

NOTES:
1. THIS DETAIL IS INTENDED FOR ALL TYPE "C" INLETS IN THE THE PROPOSED STREETS, EXCLUDING I–6, I–7, I–26, I–27, I–20 AND I–21. SEE TRANSITION DETAIL – SLANT CURB TO TYPE–C INLET TO VERTICAL CURB (EAST MAPLE STREET: I–20 & I–21) FOR THE TWO INLETS LOCATED AT THE PROPOSED INTERSECTION WITH EAST MAPLE STREET. SEE TRANSITION DETAIL – SLANT CURB TO TYPE–C INLET FOR LOW POINT INLETS (EAST MAPLE STREET: I–6, I–7, I–26 & I–27) FOR THE FOUR INLETS LOCATED AT THE LOW POINTS IN STREETS.
2. THIS DETAIL SPECIFIES HORIZONTAL ALIGNMENT OF THE BACK OF CURB BEING CONCENTRIC WITH THE BACK OF INLET HOOD.
3. THIS DETAIL SPECIFIES VERTICAL ALIGNMENT OF THE TOP OF CURB BEING ALIGNED WITH THE TOP OF THE HOOD OF THE INLET.

TRANSITION DETAIL – SLANT CURB TO TYPE–C INLET

NOT TO SCALE

NO.	DATE	REVISION
3	12–21–21	REVISED PER N. LEB. TWP., LEB. CNTY. ENG. & THE REVISED WALL DESIGN
2	9–29–21	REVISED PER SEWER AUTH., N. LEB. TWP., LEB. CNTY. ENG. & THE REVISED WALL DESIGN
1	6–18–21	REVISED PER LCCD, DEP, SEWER AUTH., N. LEB. TWP., & LCPD

FOR PIONEER MANAGEMENT BY:

FIELDBOOK NO.

SURV. CHIEF:

CHKD BY: JCH

DRAWN BY: JDB/MLS

CHKD BY: JDB/JCH

DESIGN BY: JDB/KWG

MANAGER: JAMES C. HENKE

DRAWING REFERENCE: X:\18-2000-01\CAD\Other Plans\Details.dwg

XREFS: TB [F:\18-2000-01\CAD\Final Plan\X-Xtras\T

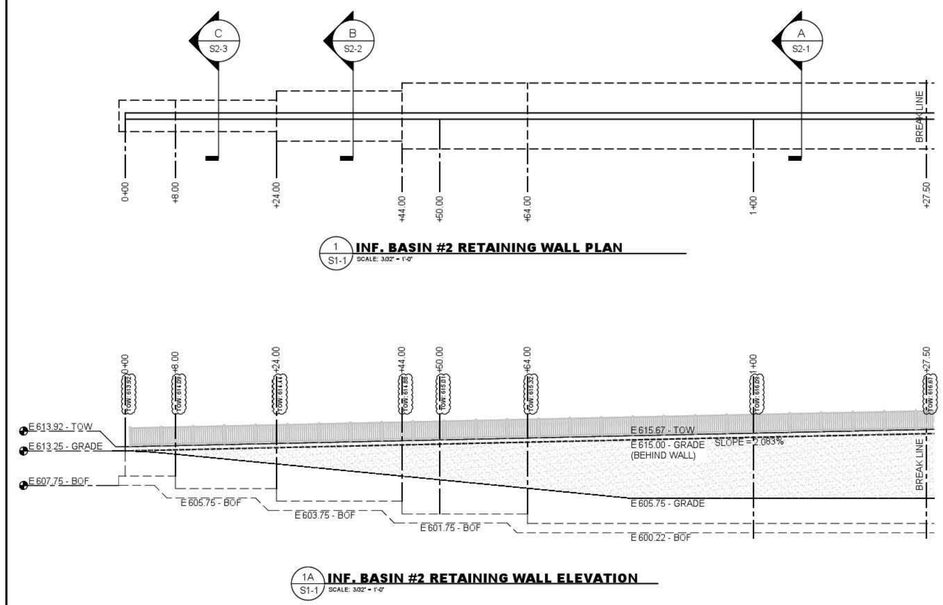

1 S1-1 **INF. BASIN #2 RETAINING WALL PLAN**
SCALE: 3/32" = 1'-0"

1A S1-1 **INF. BASIN #2 RETAINING WALL ELEVATION**
SCALE: 3/32" = 1'-0"

COMMONWEALTH OF PENNSYLVANIA
REGISTERED PROFESSIONAL
JAMES ALLEN KOPPENHAVER
ENGINEER
No. PE035748-E

James A. Koppenhaver, P.E.
304 Logan Avenue
Wyomissing, PA 19610
484-794-9949

PROPOSED RETAINING WALL FOR MAPLEDALE ESTATES . NORTH LEBANON TOWNSHIP

ISSUED	REVISED
08-23-2021	11-17-2021

DESIGNED BY: JAK

DRAWING TITLE: DETAILS

DRAWING NUMBER: **S1-1**

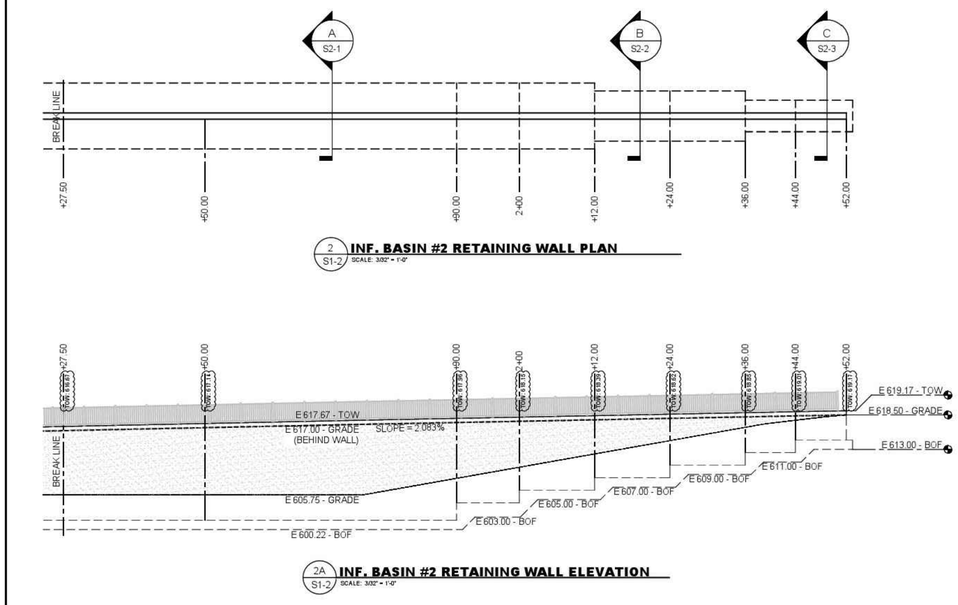

2 S1-2 **INF. BASIN #2 RETAINING WALL PLAN**
SCALE: 3/32" = 1'-0"

2A S1-2 **INF. BASIN #2 RETAINING WALL ELEVATION**
SCALE: 3/32" = 1'-0"

COMMONWEALTH OF PENNSYLVANIA
REGISTERED PROFESSIONAL
JAMES ALLEN KOPPENHAVER
ENGINEER
No. PE035748-E

James A. Koppenhaver, P.E.
304 Logan Avenue
Wyomissing, PA 19610
484-794-9949

PROPOSED RETAINING WALL FOR MAPLEDALE ESTATES . NORTH LEBANON TOWNSHIP

ISSUED	REVISED
08-23-2021	11-17-2021

DESIGNED BY: JAK

DRAWING TITLE: DETAILS

DRAWING NUMBER: **S1-2**

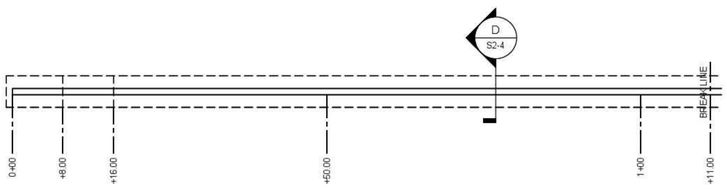

1 S1-3 **BIO-RETENTION BASIN #1 RETAINING WALL PLAN**
SCALE: 3/32" = 1'-0"

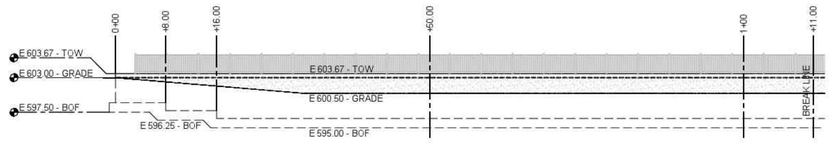

1A S1-3 **BIO-RETENTION BASIN #1 RETAINING WALL ELEVATION**
SCALE: 3/32" = 1'-0"

COMMONWEALTH OF PENNSYLVANIA
REGISTERED PROFESSIONAL
JAMES ALLEN KOPPENHAVER
ENGINEER
No. PE035748-E

James A. Koppenhaver, P.E.
304 Logan Avenue
Wyomissing, PA 19610
484-794-9949

PROPOSED RETAINING WALL FOR MAPLEDALE ESTATES . NORTH LEBANON TOWNSHIP

ISSUED	REVISED
08-23-2021	11-17-2021

DESIGNED BY: JAK

DRAWING TITLE: DETAILS

DRAWING NUMBER: **S1-3**

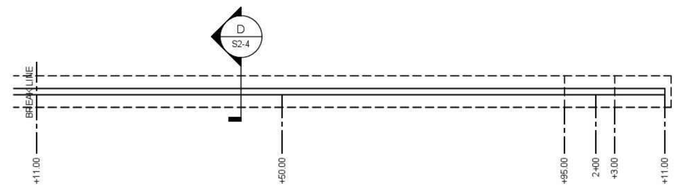

2 S1-4 **BIO-RETENTION BASIN #1 RETAINING WALL PLAN**
SCALE: 3/32" = 1'-0"

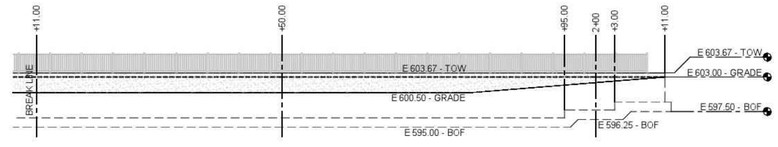

2A S1-4 **BIO-RETENTION BASIN #1 RETAINING WALL ELEVATION**
SCALE: 3/32" = 1'-0"

COMMONWEALTH OF PENNSYLVANIA
REGISTERED PROFESSIONAL
JAMES ALLEN KOPPENHAVER
ENGINEER
No. PE035748-E

James A. Koppenhaver, P.E.
304 Logan Avenue
Wyomissing, PA 19610
484-794-9949

PROPOSED RETAINING WALL FOR MAPLEDALE ESTATES . NORTH LEBANON TOWNSHIP

ISSUED	REVISED
08-23-2021	11-17-2021

DESIGNED BY: JAK

DRAWING TITLE: DETAILS

DRAWING NUMBER: **S1-4**

NO.	DATE	REVISION
3	12-21-21	REVISED PER N. LEB., TWP., LEB. CNTY. ENG. & THE REVISED WALL DESIGN
2	9-29-21	REVISED PER SEWER AUTH., N. LEB. TWP., LEB. CNTY. ENG. & THE REVISED WALL DESIGN
1	6-18-21	REVISED PER LCCD, DEP., SEWER AUTH., N. LEB. TWP., & LCPD

MANAGER: JAMES C. HENKE
SURV. CHIEF:
FIELDBOOK NO.
FOR PIONEER MANAGEMENT BY:

DESIGN BY: JDB/KWG
CHKD BY: JDB/JCH
DRAWN BY: JDB/MLS
CHKD BY: JCH

DRAWING REFERENCE: F:\18\18-2000-01\CAD\Final Plan\X-Xtnds\18-2000-01-B-Base.dwg
XREFS: TB [F:\18\18-2000-01\CAD\Final Plan\X-Xtnds\TB.dwg]

CLIENT
MR. S. GERALD MUSSER
144 BELL ROAD
PALMYRA, PA 17078
(717) 821-1129

SCALE
NOT TO SCALE

PIONEER Management, LLC
111 Millersville Road, Lancaster, PA 17603
Phone: (717) 481-4500 Fax: (717) 481-4455
Email: jvb@pioneermanagementllc.com
Website: www.pioneermanagementllc.com

RETAINING WALL DESIGNS
FOR THE
FINAL SUBDIVISION AND LAND DEVELOPMENT PLAN OF
MAPLEDALE ESTATES
NORTH LEBANON TOWNSHIP LEBANON COUNTY, PA

DATE: FEB. 25, 2021
SHEET NO. 29A OF 36
DWG. NO. 18-2000-01-B

F:\18\18-2000-01\CAD\Final Plan\Details.dwg, 29B RETAINING WALL DESIGNS, 12/21/2021 1:51:56 PM, 1:1

RETAINING WALL SEQUENCE OF CONSTRUCTION

a. PERFORM CONSTRUCTION STAKE-OUT FOR THE HORIZONTAL AND VERTICAL CONTROLS.
b. INSTALL SILT SOCK SEDIMENT FILTERS DOWNSLOPE OF WALL CONSTRUCTION AREA AS SHOWN ON PLANS.
c. REMOVE VEGETATION FROM THE CONSTRUCTION AREA. STRIP TOPSOIL AND STOCKPILE AT DESIGNATED LOCATION. EXCAVATE TO SPECIFIED FOUNDATION DEPTHS. AFTER EXCAVATION INSPECTION HAS BEEN COMPLETED SUCCESSFULLY, BEGIN RETAINING WALL FOOTING INSTALLATION.
d. INSTALL FORMWORK FOR STEM WALLS. INSTALL STEEL REINFORCING. FOLLOWING SUCCESSFUL INSPECTION OF FORMWORK AND REINFORCING INSTALLATION, INSTALL CONCRETE. PROVIDE VERTICAL CONTROL JOINTS AT 10' O.C. MAXIMUM ALONG THE LENGTH OF THE WALL.
e. REMOVE FORMS AFTER FORTY-EIGHT (48) HOURS. PROVIDE SEVEN (7) DAYS MINIMUM CURING TIME. COAT ALL STEM WALLS WITH THOROSEAL WATERPROOF CEMENT-BASED COATING OR EQUAL. INSTALL GEOTEXTILE BEHIND WALL. INSTALL PERFORATED FOUNDATION DRAINPIPE BEHIND STEM WALL. TERMINATE PIPE AT DESIGNATED OUTLET END INDICATED ON PLAN. (SELECT DISCHARGE POINT DOWNSLOPE FROM END OF WALL. IF END DISCHARGE POINT IS NOT POSSIBLE, INDICATE DRAIN PIPE EXIT THROUGH FRONT FACE OF WALL WITH 4"Ø INSERT). SURROUND PIPE WITH PA 2B STONE AS SHOWN ON DETAIL. BUILD-UP 12" WIDE DRAIN BEHIND WALL SIMULTANEOUSLY AS EARTH BACKFILLING PROCEEDS IN 8-INCH LIFTS. COMPACT LIFTS OF BACKFILL WITH 2-TON JUMPING JACK TO 95% MAXIMUM DRY DENSITY.
f. WHEN STRUCTURAL BACKFILLING IS COMPLETE, INSTALL FENCE.
g. RE-SPREAD 4"-6" TOPSOIL OVER BACKFILLED AND DISTURBED AREAS. APPLY SOIL AMENDMENTS. INSTALL PERMANENT SEEDING AND MULCHING OR TURF.
h. WHEN DISTURBED AREAS HAVE REACHED A UNIFORM LEVEL OF 70% STABILIZATION, REMOVE SILT SOCK PROTECTION. PERFORM GENERAL SITE CLEAN-UP.

CONCRETE NOTES:

a. DESIGN MINIMUM COMPRESSIVE STRENGTH OF ALL STONE CONCRETE SHALL BE 3,000 PSI AT 28 DAYS.
b. MATERIAL, DESIGN, AND PLACING OF CONCRETE SHALL FOLLOW THE "AMERICAN CONCRETE INSTITUTE BUILDING CODE 318, LATEST EDITION.
c. REINFORCING STEEL SHALL BE DEFORMED BARS CONFORMING TO A.S.T.M A615 GRADE 60 BILLET STEEL WITH A TENSILE DESIGN STRESS OF 24,000 PSI. ALL BARS SHALL BE GALVANIZED PER A.S.T.M. A767
d. PROVIDE KEYS AT ALL CONSTRUCTION JOINTS
e. ALL CONCRETE SHALL HAVE A SLUMP OF 4 INCHES (± 1 INCH), AIR-ENTRAINMENT OF 3 TO 6 PERCENT, & WATER/CEMENT RATION OF 0.58.
f. VERTICAL CONTROL JOINTS AND CONSTRUCTION JOINTS SHALL BE SPACED NO MORE THAN 20 FEET ON CENTER.
g. ALL SURFACES OF STEM WALLS SHALL BE COATED WITH A WATERPROOF CEMENT-BASED COATING BEFORE BACK FILLING. (THOROSEAL WATERPROOF CEMENT-BASED COATING OR EQUAL)
h. INSPECTION SERVICES ARE REQUIRED FOR THE FOLLOWING:
h.a. VERIFICATION OF MATERIALS
h.b. TESTING OF MATERIALS
h.c. REINFORCING
h.d. FORMING SIGNOFFS PRIOR TO CONCRETE PLACEMENT
i. INSPECTION SERVICE REPORTS TO BE PROVIDED TO NORTH LEBANON TOWNSHIP AND THE LCPD

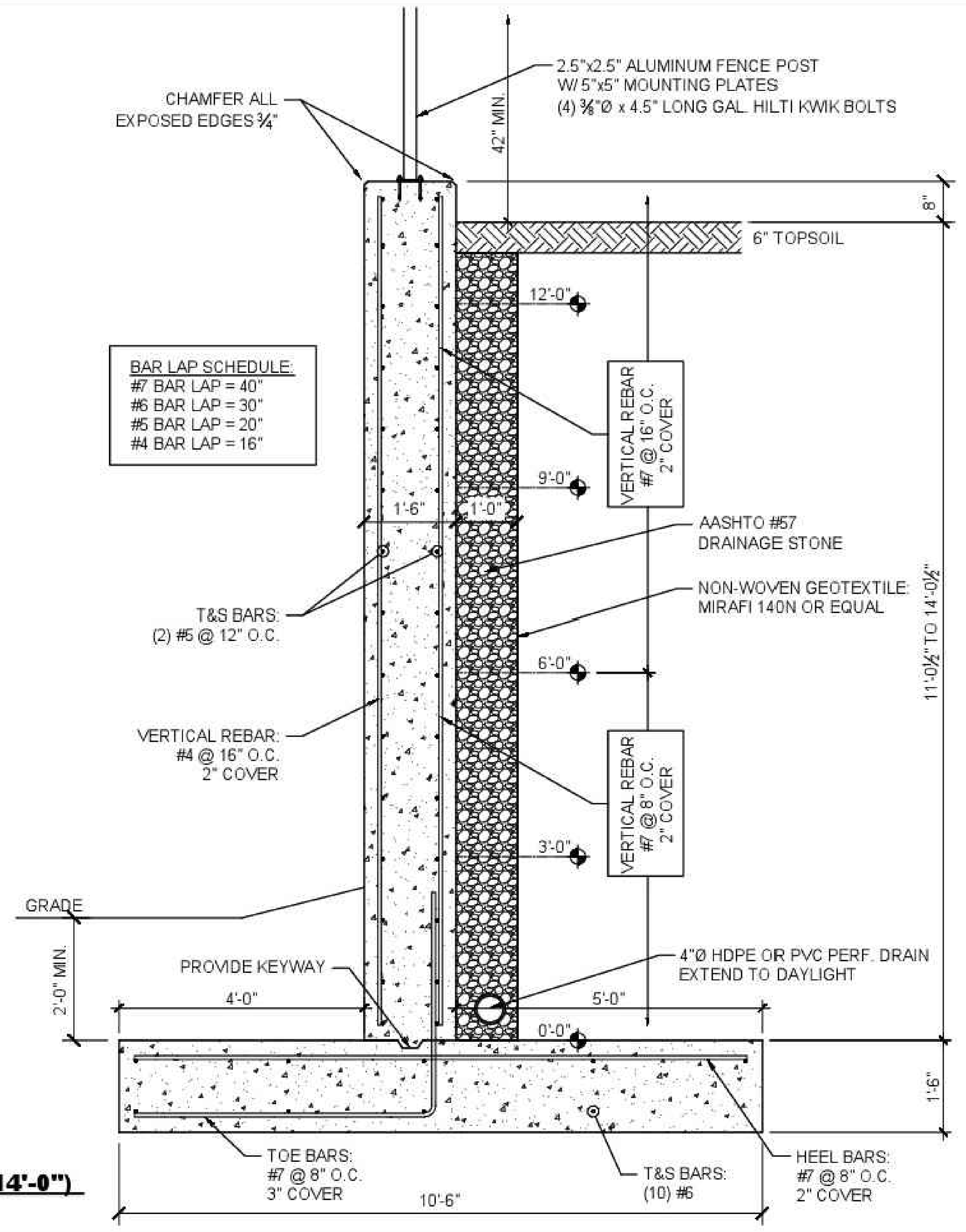

A / S2-1 **RETAINING WALL DETAIL (11'-0" TO 14'-0")**
SCALE: 1/2" = 1'-0"

COMMONWEALTH OF PENNSYLVANIA
REGISTERED PROFESSIONAL
JAMES ALLEN KOPPENHAVER
ENGINEER
No. PE035748-E

James A. Koppenhaver, P.E.
304 Logan Avenue
Wyomissing, PA 19610
484-794-9949

PROPOSED RETAINING WALL
FOR
MAPLEDALE ESTATES
-
NORTH LEBANON TOWNSHIP

ISSUED	REVISED
08-23-2021	11-17-2021

DESIGNED BY:
JAK

DRAWING TITLE
DETAILS

DRAWING NUMBER
S2-1

RETAINING WALL SEQUENCE OF CONSTRUCTION

a. PERFORM CONSTRUCTION STAKE-OUT FOR THE HORIZONTAL AND VERTICAL CONTROLS.
b. INSTALL SILT SOCK SEDIMENT FILTERS DOWNSLOPE OF WALL CONSTRUCTION AREA AS SHOWN ON PLANS.
c. REMOVE VEGETATION FROM THE CONSTRUCTION AREA. STRIP TOPSOIL AND STOCKPILE AT DESIGNATED LOCATION. EXCAVATE TO SPECIFIED FOUNDATION DEPTHS. AFTER EXCAVATION INSPECTION HAS BEEN COMPLETED SUCCESSFULLY, BEGIN RETAINING WALL FOOTING INSTALLATION.
d. INSTALL FORMWORK FOR STEM WALLS. INSTALL STEEL REINFORCING. FOLLOWING SUCCESSFUL INSPECTION OF FORMWORK AND REINFORCING INSTALLATION, INSTALL CONCRETE. PROVIDE VERTICAL CONTROL JOINTS AT 10' O.C. MAXIMUM ALONG THE LENGTH OF THE WALL.
e. REMOVE FORMS AFTER FORTY-EIGHT (48) HOURS. PROVIDE SEVEN (7) DAYS MINIMUM CURING TIME. COAT ALL STEM WALLS WITH THOROSEAL WATERPROOF CEMENT-BASED COATING OR EQUAL. INSTALL GEOTEXTILE BEHIND WALL. INSTALL PERFORATED FOUNDATION DRAINPIPE BEHIND STEM WALL. TERMINATE PIPE AT DESIGNATED OUTLET END INDICATED ON PLAN. (SELECT DISCHARGE POINT DOWNSLOPE FROM END OF WALL. IF END DISCHARGE POINT IS NOT POSSIBLE, INDICATE DRAIN PIPE EXIT THROUGH FRONT FACE OF WALL WITH 4"Ø INSERT). SURROUND PIPE WITH PA 2B STONE AS SHOWN ON DETAIL. BUILD-UP 12" WIDE DRAIN BEHIND WALL SIMULTANEOUSLY AS EARTH BACKFILLING PROCEEDS IN 8-INCH LIFTS. COMPACT LIFTS OF BACKFILL WITH 2-TON JUMPING JACK TO 95% MAXIMUM DRY DENSITY.
f. WHEN STRUCTURAL BACKFILLING IS COMPLETE, INSTALL FENCE.
g. RE-SPREAD 4"-6" TOPSOIL OVER BACKFILLED AND DISTURBED AREAS. APPLY SOIL AMENDMENTS. INSTALL PERMANENT SEEDING AND MULCHING OR TURF.
h. WHEN DISTURBED AREAS HAVE REACHED A UNIFORM LEVEL OF 70% STABILIZATION, REMOVE SILT SOCK PROTECTION. PERFORM GENERAL SITE CLEAN-UP.

CONCRETE NOTES:

a. DESIGN MINIMUM COMPRESSIVE STRENGTH OF ALL STONE CONCRETE SHALL BE 3,000 PSI AT 28 DAYS.
b. MATERIAL, DESIGN, AND PLACING OF CONCRETE SHALL FOLLOW THE "AMERICAN CONCRETE INSTITUTE BUILDING CODE 318, LATEST EDITION.
c. REINFORCING STEEL SHALL BE DEFORMED BARS CONFORMING TO A.S.T.M A615 GRADE 60 BILLET STEEL WITH A TENSILE DESIGN STRESS OF 24,000 PSI. ALL BARS SHALL BE GALVANIZED PER A.S.T.M. A767
d. PROVIDE KEYS AT ALL CONSTRUCTION JOINTS
e. ALL CONCRETE SHALL HAVE A SLUMP OF 4 INCHES (± 1 INCH), AIR-ENTRAINMENT OF 3 TO 6 PERCENT, & WATER/CEMENT RATION OF 0.58.
f. VERTICAL CONTROL JOINTS AND CONSTRUCTION JOINTS SHALL BE SPACED NO MORE THAN 20 FEET ON CENTER.
g. ALL SURFACES OF STEM WALLS SHALL BE COATED WITH A WATERPROOF CEMENT-BASED COATING BEFORE BACK FILLING. (THOROSEAL WATERPROOF CEMENT-BASED COATING OR EQUAL)
h. INSPECTION SERVICES ARE REQUIRED FOR THE FOLLOWING:
h.a. VERIFICATION OF MATERIALS
h.b. TESTING OF MATERIALS
h.c. REINFORCING
h.d. FORMING SIGNOFFS PRIOR TO CONCRETE PLACEMENT
i. INSPECTION SERVICE REPORTS TO BE PROVIDED TO NORTH LEBANON TOWNSHIP AND THE LCPD

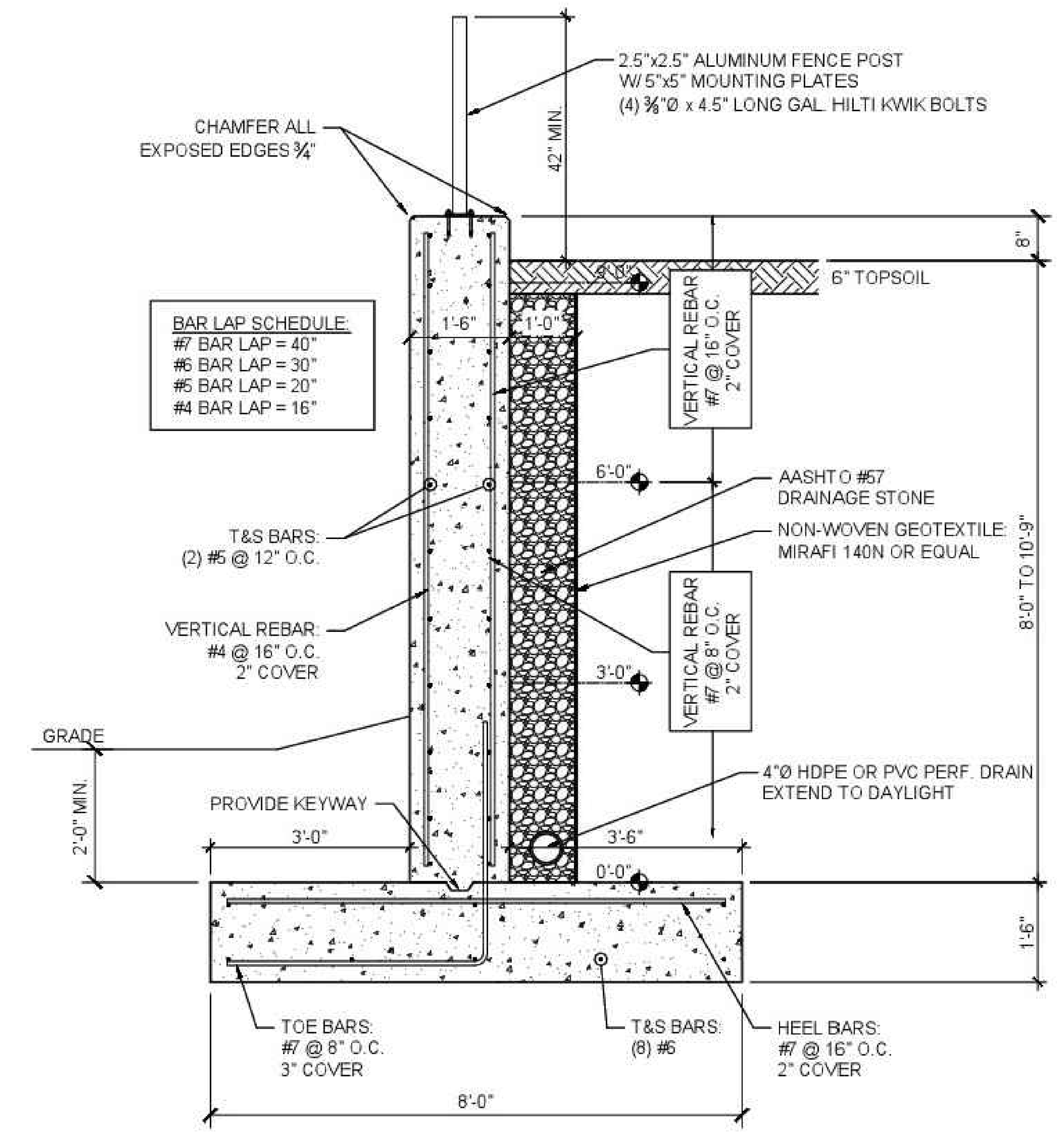

B / S2-2 **RETAINING WALL DETAIL (8'-0" TO 10'-9")**
SCALE: 1/2" = 1'-0"

COMMONWEALTH OF PENNSYLVANIA
REGISTERED PROFESSIONAL
JAMES ALLEN KOPPENHAVER
ENGINEER
No. PE035748-E

James A. Koppenhaver, P.E.
304 Logan Avenue
Wyomissing, PA 19610
484-794-9949

PROPOSED RETAINING WALL
FOR
MAPLEDALE ESTATES
-
NORTH LEBANON TOWNSHIP

ISSUED	REVISED
08-23-2021	11-17-2021

DESIGNED BY:
JAK

DRAWING TITLE
DETAILS

DRAWING NUMBER

S2-2

RETAINING WALL SEQUENCE OF CONSTRUCTION

a. PERFORM CONSTRUCTION STAKE-OUT FOR THE HORIZONTAL AND VERTICAL CONTROLS.
b. INSTALL SILT SOCK SEDIMENT FILTERS DOWNSLOPE OF WALL CONSTRUCTION AREA AS SHOWN ON PLANS.
c. REMOVE VEGETATION FROM THE CONSTRUCTION AREA. STRIP TOPSOIL AND STOCKPILE AT DESIGNATED LOCATION. EXCAVATE TO SPECIFIED FOUNDATION DEPTHS. AFTER EXCAVATION INSPECTION HAS BEEN COMPLETED SUCCESSFULLY, BEGIN RETAINING WALL FOOTING INSTALLATION.
d. INSTALL FORMWORK FOR STEM WALLS. INSTALL STEEL REINFORCING. FOLLOWING SUCCESSFUL INSPECTION OF FORMWORK AND REINFORCING INSTALLATION, INSTALL CONCRETE. PROVIDE VERTICAL CONTROL JOINTS AT 10' O.C. MAXIMUM ALONG THE LENGTH OF THE WALL.
e. REMOVE FORMS AFTER FORTY-EIGHT (48) HOURS. PROVIDE SEVEN (7) DAYS MINIMUM CURING TIME. COAT ALL STEM WALLS WITH THOROSEAL WATERPROOF CEMENT-BASED COATING OR EQUAL. INSTALL GEOTEXTILE BEHIND WALL. INSTALL PERFORATED FOUNDATION DRAINPIPE BEHIND STEM WALL. TERMINATE PIPE AT DESIGNATED OUTLET END INDICATED ON PLAN. (SELECT DISCHARGE POINT DOWNSLOPE FROM END OF WALL. IF END DISCHARGE POINT IS NOT POSSIBLE, INDICATE DRAIN PIPE EXIT THROUGH FRONT FACE OF WALL WITH 4"Ø INSERT). SURROUND PIPE WITH PA 2B STONE AS SHOWN ON DETAIL. BUILD-UP 12" WIDE DRAIN BEHIND WALL SIMULTANEOUSLY AS EARTH BACKFILLING PROCEEDS IN 8-INCH LIFTS. COMPACT LIFTS OF BACKFILL WITH 2-TON JUMPING JACK TO 95% MAXIMUM DRY DENSITY.
f. WHEN STRUCTURAL BACKFILLING IS COMPLETE, INSTALL FENCE.
g. RE-SPREAD 4"-6" TOPSOIL OVER BACKFILLED AND DISTURBED AREAS. APPLY SOIL AMENDMENTS. INSTALL PERMANENT SEEDING AND MULCHING OR TURF.
h. WHEN DISTURBED AREAS HAVE REACHED A UNIFORM LEVEL OF 70% STABILIZATION, REMOVE SILT SOCK PROTECTION. PERFORM GENERAL SITE CLEAN-UP.

CONCRETE NOTES:

a. DESIGN MINIMUM COMPRESSIVE STRENGTH OF ALL STONE CONCRETE SHALL BE 3,000 PSI AT 28 DAYS.
b. MATERIAL, DESIGN, AND PLACING OF CONCRETE SHALL FOLLOW THE "AMERICAN CONCRETE INSTITUTE BUILDING CODE 318, LATEST EDITION.
c. REINFORCING STEEL SHALL BE DEFORMED BARS CONFORMING TO A.S.T.M A615 GRADE 60 BILLET STEEL WITH A TENSILE DESIGN STRESS OF 24,000 PSI. ALL BARS SHALL BE GALVANIZED PER A.S.T.M. A767
d. PROVIDE KEYS AT ALL CONSTRUCTION JOINTS
e. ALL CONCRETE SHALL HAVE A SLUMP OF 4 INCHES (± 1 INCH), AIR-ENTRAINMENT OF 3 TO 6 PERCENT, & WATER/CEMENT RATION OF 0.58.
f. VERTICAL CONTROL JOINTS AND CONSTRUCTION JOINTS SHALL BE SPACED NO MORE THAN 20 FEET ON CENTER.
g. ALL SURFACES OF STEM WALLS SHALL BE COATED WITH A WATERPROOF CEMENT-BASED COATING BEFORE BACK FILLING. (THOROSEAL WATERPROOF CEMENT-BASED COATING OR EQUAL)
h. INSPECTION SERVICES ARE REQUIRED FOR THE FOLLOWING:
h.a. VERIFICATION OF MATERIALS
h.b. TESTING OF MATERIALS
h.c. REINFORCING
h.d. FORMING SIGNOFFS PRIOR TO CONCRETE PLACEMENT
i. INSPECTION SERVICE REPORTS TO BE PROVIDED TO NORTH LEBANON TOWNSHIP AND THE LCPD

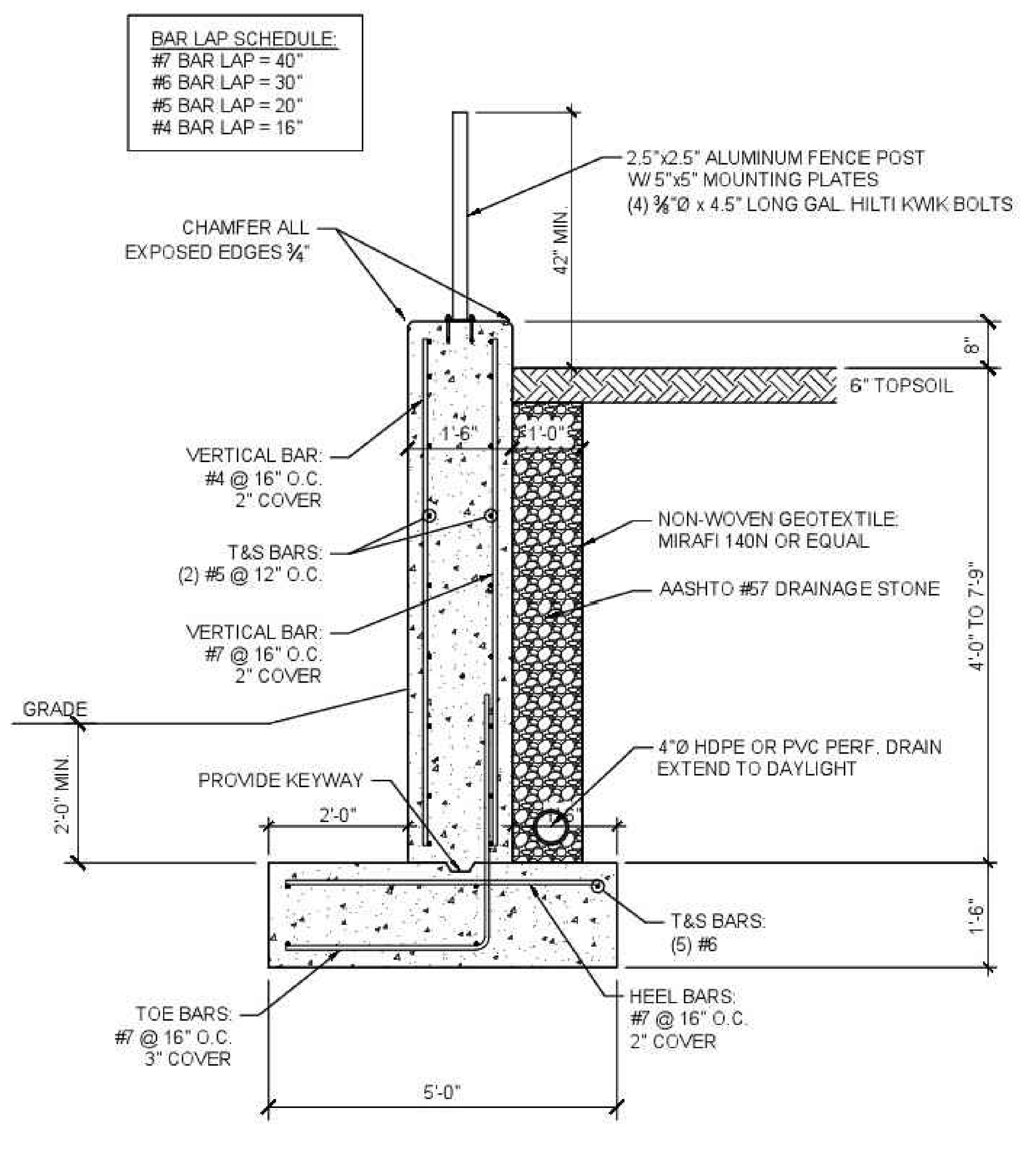

C / S2-3 **RETAINING WALL DETAIL (4'-0" TO 7'-9")**
SCALE: 1/2" = 1'-0"

COMMONWEALTH OF PENNSYLVANIA
REGISTERED PROFESSIONAL
JAMES ALLEN KOPPENHAVER
ENGINEER
No. PE035748-E

James A. Koppenhaver, P.E.
304 Logan Avenue
Wyomissing, PA 19610
484-794-9949

PROPOSED RETAINING WALL
FOR
MAPLEDALE ESTATES
-
NORTH LEBANON TOWNSHIP

ISSUED	REVISED
08-23-2021	11-17-2021

DESIGNED BY:
JAK

DRAWING TITLE
DETAILS

DRAWING NUMBER

S2-3

RETAINING WALL SEQUENCE OF CONSTRUCTION

a. PERFORM CONSTRUCTION STAKE-OUT FOR THE HORIZONTAL AND VERTICAL CONTROLS.
b. INSTALL SILT SOCK SEDIMENT FILTERS DOWNSLOPE OF WALL CONSTRUCTION AREA AS SHOWN ON PLANS.
c. REMOVE VEGETATION FROM THE CONSTRUCTION AREA. STRIP TOPSOIL AND STOCKPILE AT DESIGNATED LOCATION. EXCAVATE TO SPECIFIED FOUNDATION DEPTHS. AFTER EXCAVATION INSPECTION HAS BEEN COMPLETED SUCCESSFULLY, BEGIN RETAINING WALL FOOTING INSTALLATION.
d. INSTALL FORMWORK FOR STEM WALLS. INSTALL STEEL REINFORCING. FOLLOWING SUCCESSFUL INSPECTION OF FORMWORK AND REINFORCING INSTALLATION, INSTALL CONCRETE. PROVIDE VERTICAL CONTROL JOINTS AT 10' O.C. MAXIMUM ALONG THE LENGTH OF THE WALL.
e. REMOVE FORMS AFTER FORTY-EIGHT (48) HOURS. PROVIDE SEVEN (7) DAYS MINIMUM CURING TIME. COAT ALL STEM WALLS WITH THOROSEAL WATERPROOF CEMENT-BASED COATING OR EQUAL. INSTALL GEOTEXTILE BEHIND WALL. INSTALL PERFORATED FOUNDATION DRAINPIPE BEHIND STEM WALL. TERMINATE PIPE AT DESIGNATED OUTLET END INDICATED ON PLAN. (SELECT DISCHARGE POINT DOWNSLOPE FROM END OF WALL. IF END DISCHARGE POINT IS NOT POSSIBLE, INDICATE DRAIN PIPE EXIT THROUGH FRONT FACE OF WALL WITH 4"Ø INSERT). SURROUND PIPE WITH PA 2B STONE AS SHOWN ON DETAIL. BUILD-UP 12" WIDE DRAIN BEHIND WALL SIMULTANEOUSLY AS EARTH BACKFILLING PROCEEDS IN 8-INCH LIFTS. COMPACT LIFTS OF BACKFILL WITH 2-TON JUMPING JACK TO 95% MAXIMUM DRY DENSITY.
f. WHEN STRUCTURAL BACKFILLING IS COMPLETE, INSTALL FENCE.
g. RE-SPREAD 4"-6" TOPSOIL OVER BACKFILLED AND DISTURBED AREAS. APPLY SOIL AMENDMENTS. INSTALL PERMANENT SEEDING AND MULCHING OR TURF.
h. WHEN DISTURBED AREAS HAVE REACHED A UNIFORM LEVEL OF 70% STABILIZATION, REMOVE SILT SOCK PROTECTION. PERFORM GENERAL SITE CLEAN-UP.

CONCRETE NOTES:

a. DESIGN MINIMUM COMPRESSIVE STRENGTH OF ALL STONE CONCRETE SHALL BE 3,000 PSI AT 28 DAYS.
b. MATERIAL, DESIGN, AND PLACING OF CONCRETE SHALL FOLLOW THE "AMERICAN CONCRETE INSTITUTE BUILDING CODE 318, LATEST EDITION.
c. REINFORCING STEEL SHALL BE DEFORMED BARS CONFORMING TO A.S.T.M A615 GRADE 60 BILLET STEEL WITH A TENSILE DESIGN STRESS OF 24,000 PSI. ALL BARS SHALL BE GALVANIZED PER A.S.T.M. A767
d. PROVIDE KEYS AT ALL CONSTRUCTION JOINTS
e. ALL CONCRETE SHALL HAVE A SLUMP OF 4 INCHES (± 1 INCH), AIR-ENTRAINMENT OF 3 TO 6 PERCENT, & WATER/CEMENT RATION OF 0.58.
f. VERTICAL CONTROL JOINTS AND CONSTRUCTION JOINTS SHALL BE SPACED NO MORE THAN 20 FEET ON CENTER.
g. ALL SURFACES OF STEM WALLS SHALL BE COATED WITH A WATERPROOF CEMENT-BASED COATING BEFORE BACK FILLING. (THOROSEAL WATERPROOF CEMENT-BASED COATING OR EQUAL)
h. INSPECTION SERVICES ARE REQUIRED FOR THE FOLLOWING:
h.a. VERIFICATION OF MATERIALS
h.b. TESTING OF MATERIALS
h.c. REINFORCING
h.d. FORMING SIGNOFFS PRIOR TO CONCRETE PLACEMENT
i. INSPECTION SERVICE REPORTS TO BE PROVIDED TO NORTH LEBANON TOWNSHIP AND THE LCPD

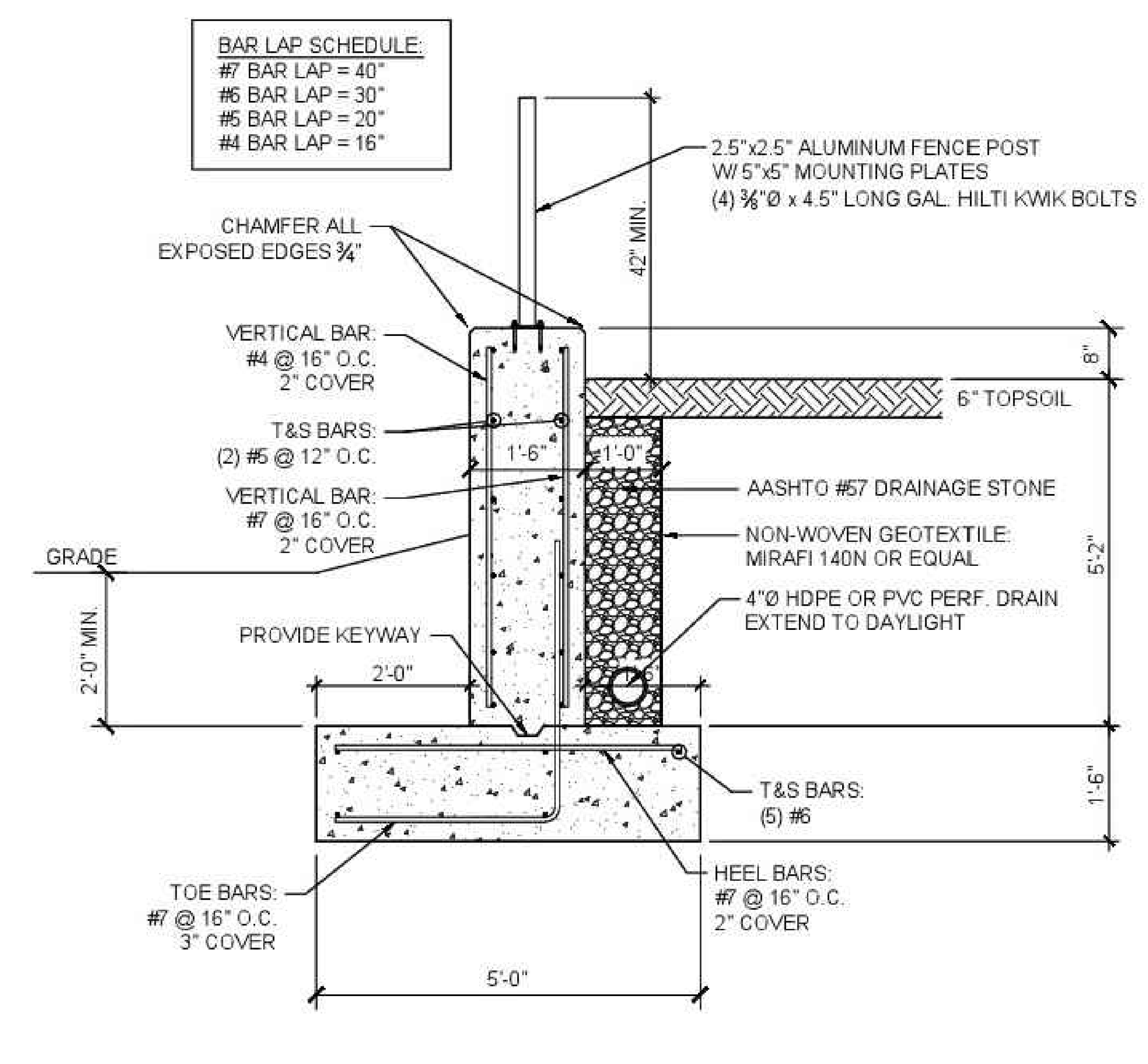

D / S2-4 **RETAINING WALL DETAIL BIO-RETENTION BASIN**
SCALE: 1/2" = 1'-0"

COMMONWEALTH OF PENNSYLVANIA
REGISTERED PROFESSIONAL
JAMES ALLEN KOPPENHAVER
ENGINEER
No. PE035748-E

James A. Koppenhaver, P.E.
304 Logan Avenue
Wyomissing, PA 19610
484-794-9949

PROPOSED RETAINING WALL
FOR
MAPLEDALE ESTATES
-
NORTH LEBANON TOWNSHIP

ISSUED	REVISED
08-23-2021	11-17-2021

DESIGNED BY:
JAK

DRAWING TITLE
DETAILS

DRAWING NUMBER

S2-4

NO.	DATE	REVISION
3	12-21-21	REVISED PER N. LEB. TWP., LEB. CNTY. ENG. & THE REVISED WALL DESIGN
2	9-29-21	REVISED PER SEWER AUTH., N. LEB. TWP., LEB. CNTY. ENG. & THE REVISED WALL DESIGN
1	6-18-21	REVISED PER LCCD, DEP, SEWER AUTH., N. LEB. TWP., & LCPD

FOR PIONEER MANAGEMENT BY:

MANAGER: JAMES C. HENKE	SURV. CHIEF:	FIELDBOOK NO.
DESIGN BY: JDB/KWG	CHKD BY: JDB/JCH	DRAWN BY: JDB/MLS	CHKD BY: JCH

DRAWING REFERENCE: F:\18\18-2000-01\CAD\Final Plan\Details.dwg
XREFS: TB [F:\18\18-2000-01\CAD\Final Plan\X-Refs\TB.dwg]

CLIENT
MR. S. GERALD MUSSER
144 BELL ROAD
PALMYRA, PA 17078
(717) 821-1129

SCALE
NOT TO SCALE

PIONEER
Management, LLC

111 Millersville Road, Lancaster, PA 17603
Phone (717) 481-5500 · Fax (717) 481-4955
Email: jh@pioneermanagementllc.com
Website: www.pioneermanagementllc.com

RETAINING WALL DESIGNS
FOR THE
FINAL SUBDIVISION AND LAND DEVELOPMENT PLAN OF
MAPLEDALE ESTATES
NORTH LEBANON TOWNSHIP LEBANON COUNTY, PA

DATE: FEB. 25, 2021
SHEET NO. 29B OF 36
DWG. NO. 18-2000-01-B

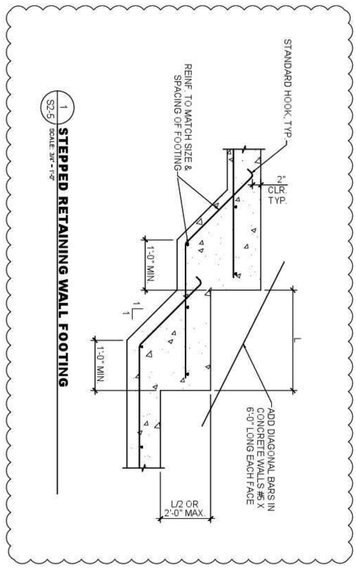

PROPOSED RETAINING WALL
FOR
MAPLEDALE ESTATES
-
NORTH LEBANON TOWNSHIP

James A. Koppenhaver, P.E.
304 Locust Avenue
Wyomissing, PA 19610
484-794-6939

COMMONWEALTH OF PENNSYLVANIA
JAMES ALLEN KOPPENHAVER
ENGINEER
PROFESSIONAL

ISSUED 08-23-2021
REVISED 11-17-2021

DESIGNED BY: JAK

DRAWING TITLE
DETAILS

DRAWING NUMBER
S2-5

DWG. NO. 18-2000-01-B
SHEET NO. 29C OF 36
DATE: FEB. 25, 2021

RETAINING WALL DESIGNS

FOR THE
FINAL SUBDIVISION AND LAND
DEVELOPMENT PLAN OF
MAPLEDALE ESTATES
NORTH LEBANON TOWNSHIP LEBANON COUNTY, PA.

PIONEER
Management, LLC
111 Millersville Road, Lancaster, PA 17603
Phone (717) 481-5500 · Fax (717) 481-4955
Email: jvb@pioneermanagementllc.com
Website: www.pioneermanagementllc.com

CLIENT
MR. S. GERALD MUSSER
144 BELL ROAD
PALMYRA, PA 17078
(717) 821-1129

SCALE
NOT TO SCALE

MANAGER: JAMES C. HENKE		SURV. CHIEF:	FIELDBOOK NO.	FOR PIONEER MANAGEMENT BY:
DESIGN BY: JDB/KWG	CHKD BY: JDB/JCH	DRAWN BY: JDB/MLS	CHKD BY: JCH	
DRAWING REFERENCE: F:\18\18-2000-01\CAD\Final Plan\Details.dwg				
XREFS: TB [F:\18\18-2000-01\CAD\Final Plan\X-Refs\TB.dwg]				

NO.	DATE	REVISION
3	12-21-21	REVISED PER N. LEB. TWP., LEB. CNTY. ENG. & THE REVISED WALL DESIGN
2	9-29-21	REVISED PER SEWER AUTH., N. LEB. TWP., LEB. CNTY. ENG. & THE REVISED WALL DESIGN
1	6-18-21	REVISED PER LCCD, DEP, SEWER AUTH., N. LEB. TWP., & LCPD

P:\18-19-2000-01\CAD\Final Plan\Details.dwg, 30 OPERATION AND MAINTENANCE AGREEMENT & NOTES, 12/2/2021 1:55:57 PM, 1:1

OPERATION AND MAINTENANCE SCHEDULE

THIS OPERATION AND MAINTENANCE SCHEDULE PERTAINS TO ALL STORMWATER FACILITIES SHOWN ON THE POST CONSTRUCTION STORMWATER MANAGEMENT (PCSM) PLAN.

THE INDIVIDUAL LOT OWNER SHALL OR THE HOA (IN THE CASE OF THE OPEN SPACE LOT) OWN AND BE RESPONSIBLE FOR THE LONG-TERM OWNERSHIP AND MAINTENANCE OF ANY STORMWATER BMP LOCATED ON THEIR LOT.

ACCESS

ACCESS TO EACH BMP SHALL BE VIA THE STREETS AND DRAINAGE EASEMENTS.

INSPECTIONS

CONDUCT REGULAR INSPECTIONS OF ALL BMPS AT LEAST TWICE PER YEAR AND IMMEDIATELY AFTER STORM EVENTS OF 1 INCH OR GREATER. SUCH INSPECTIONS SHALL AT LEAST INVOLVE THE VISUAL EXAMINATION OF THE BMPS FOR DEBRIS DEPOSITION (SUCH DEBRIS MAY INCLUDE, BUT SHALL NOT BE LIMITED TO AGGREGATE MATERIAL, LEAVES, GRASS CLIPPINGS, SEDIMENT AND TRASH), AND AN EXAMINATION FOR DEPRESSIONS, SINKHOLES, SEEPS, ANIMAL BURROWS, EXCESSIVE VEGETATION, CLOGGING AND EROSION.

MAINTENANCE

A. SOIL AMENDMENT:
THE PCSM PLAN CALLS FOR AMENDED SOIL ON CERTAIN LOTS, INCLUDING IN SWALES AND IN THE BOTTOMS OF THE BASINS. THIS SOIL RESTORATION PROCESS MAY NEED TO BE REPEATED OVER TIME DUE TO COMPACTION AND/OR SETTLING. THESE AREAS SHALL BE AERATED OR RESTORED WITH NEW SOIL AMENDMENT WHENEVER VEGETATION NO LONGER THRIVES, WHENEVER THE SOIL HAS BEEN COMPACTED PREVENTING INFILTRATION OF WATER WITHIN 72 HOURS OR REMOVED DUE TO MAINTENANCE ACTIVITIES. SOIL AMENDMENT SHOULD BE PERFORMED ACCORDING TO THE SPECIFICATIONS PROVIDED ON SHEET 32. ANY OTHER ALTERNATIVES SHALL BE APPROVED BY NORTH LEBANON TOWNSHIP AND DEP.

B. REVEGETATE WITH TREES:
PROPOSED TREES AND SHRUBS SHALL BE MAINTAINED AND PROTECTED FROM DAMAGE. PRUNING OR OTHER REQUIRED MAINTENANCE IS PERMITTED FOR HEALTH AND SAFETY REASONS ONLY. DEAD OR DISEASED TREES SHALL BE REPLACED WITHIN 6 MONTHS.

C. INFILTRATION AND BIO-RETENTION BASINS:
ANY BARE SPOTS SHALL BE REVEGETATED AS SOON AS POSSIBLE. CARE SHALL BE TAKEN TO AVOID COMPACTION IN BASIN BOTTOM. ENSURE THAT BASIN DRAINS COMPLETELY WITHIN 72 HOURS. SHOULD BASIN FAIL TO COMPLETELY DEWATER WITHIN 72 HOURS, SCARIFY THE BOTTOM TO A DEPTH OF 6" AND PERFORM OVER-SEEDING. SHOULD DEWATERING TIME STILL EXCEED 72 HOURS, CONSULT WITH A DESIGN PROFESSIONAL AND DEP FOR THE NEXT APPROPRIATE STEPS TO TAKE.

D. SOIL AMENDMENT:
ANY BARE SPORTS SHALL BE REVEGETATED AS SOON AS POSSIBLE. CARE SHALL BE TAKEN TO AVOID EXCESSIVE COMPACTION BY VEHICLES AND MOWERS. SHOULD ANY AREAS OF SOIL AMENDMENT FAIL TO DEWATER WITHIN 72 HOURS, THEY SHALL BE SCARIFIED TO A DEPTH OF 6" AND RE-SEEDED. PLANTING OF TREES, SHRUBS OR DEEP ROOTED PERENNIALS IS ENCOURAGED.

E. PROPOSED REVISIONS TO THE APPROVED PCSM PLAN OR BMPS SHALL BE APPROVED BY DEP THROUGH AN AMENDMENT TO THE PERMIT.

A. INFILTRATION BASIN

1. REMOVE TRASH AND DEBRIS FROM THE INFILTRATION AREA AS NECESSARY.
2. MOW AND TRIM VEGETATION ONLY AS APPROPRIATE FOR THE COVER SPECIES, GENERALLY A MINIMUM OF TWICE PER YEAR. MOW TO ENSURE SAFETY, AESTHETICS, PROPER BASIN OPERATION, AND TO SUPPRESS WEEDS AND INVASIVE VEGETATION. DISPOSE OF CUTTINGS IN A LOCAL COMPOSTING FACILITY. MOW ONLY WHEN THE AREA IS DRY TO AVOID RUTTING.
3. CARE SHALL BE TAKEN TO AVOID COMPACTION BY MOWERS. DO NOT ALLOW OTHER VEHICULAR ACCESS TO THE INFILTRATION AREA OR THE SURFACE ABOVE THE INFILTRATION AREA.
4. RESEED BARE AREAS USING NATIVE GRASS SPECIES. INSTALL APPROPRIATE EROSION CONTROL MEASURES WHEN NATIVE SOIL IS EXPOSED, OR EROSION CHANNELS ARE FORMING. VEGETATIVE COVER SHOULD BE MAINTAINED AT A MINIMUM OF 95% IF VEGETATIVE COVER HAS BEEN REDUCED BY 10%, VEGETATION SHOULD BE REESTABLISHED.
5. PLANT ALTERNATIVE GRASS SPECIES IN THE EVENT OF UNSUCCESSFUL VEGETATION ESTABLISHMENT.
6. REPLACE DAMAGED VEGETATION WITHOUT DISTURBING REMAINING VEGETATION.
7. IT MAY BE NECESSARY TO WATER THE VEGETATION IN THE INFILTRATION AREA DURING DRY PERIODS TO MAINTAIN VEGETATIVE HEALTH. TREES AND SHRUBS MAY REQUIRE ANNUAL MULCHING.
8. THE UNDERLYING SOIL IN THE INFILTRATION FACILITY MAY NEED TO BE ROTOTILLED OR OTHERWISE AERATED IF THE DRAW DOWN TIME IN THE FACILITY IS MORE THAN 72 HOURS. THIS SOIL RESTORATION PROCESS MAY NEED TO BE REPEATED OVER TIME DUE TO NATURAL SOIL COMPACTION AND SETTLING.
9. SEDIMENT REMOVAL SHOULD BE CONDUCTED WHEN THE FACILITY IS COMPLETELY DRY. SEDIMENT SHOULD BE DISPOSED OF PROPERLY AND ONCE SEDIMENT IS REMOVED, DISTURBED AREAS NEED TO BE IMMEDIATELY STABILIZED AND REVEGETATED. DO NOT COMPACT THE UNDERLYING SOIL DURING THIS PROCESS. IF SOIL IS COMPACTED, THE FACILITY MAY REQUIRE TILLING, MECHANICAL SCRAPING, OR SOIL AMENDMENT TO RESTORE THE ORIGINAL INFILTRATION RATE.
10. CATCH BASINS, INLETS, AND CLEANOUT VAULTS UPGRADIENT OF THE INFILTRATION FACILITIES SHOULD BE INSPECTED AND CLEANED AT LEAST TWO TIMES PER YEAR AND AFTER RUNOFF EVENTS OF GREATER THAN ONE (1) INCH OF RAIN.
11. INSPECTIONS OF THE INFILTRATION FACILITIES SHALL BE CONDUCTED WITHIN 72 HOURS AFTER EVERY STORM EVENT OF GREATER THAN ONE (1) INCH OF RAIN, OR FOUR TIMES PER YEAR AT A MINIMUM.
    A. INSPECT AND CORRECT EROSION PROBLEMS, SLOPE STABILITY PROBLEMS, FLOW CHANNELIZATION, DAMAGE TO VEGETATION, AND THE GROWTH OF UNWANTED OR INVASIVE VEGETATION.
    B. VERIFY THAT ALL WATER IN THE FACILITY HAS DRAINED DOWN WITHIN 72 HOURS AFTER THE RAINFALL EVENT. THE FACILITY MAY REQUIRE TILLING, MECHANICAL SCRAPING, SOIL AMENDMENT, OR THE REPLACEMENT OF STORAGE MEDIA SUCH AS STONE (IF APPLICABLE) TO RESTORE PERMEABILITY IF THE DRAWDOWN TIME EXCEEDS 72 HOURS.
    C. ALL STRUCTURES EXPECTED TO RECEIVE AND/OR TRAP DEBRIS AND SEDIMENT, INCLUDING BASIN BOTTOMS, STORAGE MATRIXES, TRASH RACKS, OUTLETS STRUCTURES, RIPRAP OR GABION STRUCTURES, AND INLETS, SHOULD BE INSPECTED FOR CLOGGING AND EXCESSIVE DEBRIS AND SEDIMENT ACCUMULATION. SEDIMENT ACCUMULATION SHALL BE ADDRESSED WHEN SEDIMENT IS GREATER THAN 3 INCHES DEEP AT ANY SPOT OR IS COVERING VEGETATION.
    D. INSPECT FOR CONFORMANCE WITH ORIGINAL DESIGN CROSS-SECTION AND CORRECT AS NEEDED.
    E. INSPECT ALL PIPES, CATCH BASINS, INLET AND OUTLET STRUCTURES FOR DEFICIENCIES AND REPAIR OR REPLACE IF REQUIRED. COMMON DEFICIENCIES INCLUDE BROKEN CONCRETE, CRUSHED OR RUSTED PIPES, MISSING GROUT, OR BLOCKAGES CAUSED BY LITTER OR FOREIGN MATERIALS.
    F. NOTIFY MUNICIPAL OFFICIALS IF THERE IS EVIDENCE OF WATER CONTAMINATION OR HAZARDOUS MATERIAL SPILLS.
12. ACCESS SHALL BE GRANTED TO ALL AUTHORIZED LOCAL, STATE, AND FEDERAL AGENCIES FOR BMP INSPECTIONS AT REASONABLE TIMES AND WITH REASONABLE FREQUENCY.
13. WRITTEN REPORTS DOCUMENTING ALL INSPECTIONS, REPAIRS, AND MAINTENANCE ACTIVITIES SHALL BE MAINTAINED ON SITE BY THE PROPERTY OWNER AT ALL TIMES.

B. BIO-RETENTION BASIN

1. REMOVE TRASH AND DEBRIS FROM THE BIO-RETENTION BASIN OR RAIN GARDEN AS NECESSARY.
2. MOW AND TRIM VEGETATION A MINIMUM OF TWICE PER YEAR TO ENSURE SAFETY, AESTHETICS, PROPER BASIN OPERATION, AND TO SUPPRESS WEEDS AND INVASIVE VEGETATION. DISPOSE OF CUTTINGS IN A LOCAL COMPOSTING FACILITY. MOW ONLY WHEN BASIN IS DRY TO AVOID RUTTING.
3. WHILE VEGETATION IS BEING ESTABLISHED, PRUNING AND WEEDING MAY BE REQUIRED.
4. TREES AND SHRUBS SHOULD BE INSPECTED TWICE PER YEAR TO EVALUATE HEALTH. REPLACE ANY DEAD OR DYING VEGETATION WITHOUT DISTURBING REMAINING VEGETATION.
5. DETRITUS MAY ALSO NEED TO BE REMOVED EVERY YEAR. PERENNIAL PLANTINGS MAY BE CUT DOWN AT THE END OF THE GROWING SEASON.
6. MULCH SHOULD BE RE-SPREAD WHEN EROSION IS EVIDENT AND BE REPLENISHED AS NEEDED. ONCE EVERY 2 TO 3 YEARS THE ENTIRE AREA MAY REQUIRE MULCH REPLACEMENT.
7. DURING PERIODS OF EXTENDED DROUGHT, BIO-RETENTION AREAS MAY REQUIRE WATERING.
8. THE UNDERLYING SOIL IN THE RAIN GARDEN/BIO-RETENTION BASIN MAY NEED TO BE ROTOTILLED OR OTHERWISE AERATED IF THE DRAW DOWN TIME IN THE BASIN IS MORE THAN 72 HOURS. THIS SOIL RESTORATION PROCESS MAY NEED TO BE REPEATED OVER TIME DUE TO NATURAL SOIL COMPACTION AND SETTLING.
9. SEDIMENT REMOVAL SHOULD BE CONDUCTED WHEN THE BASIN IS COMPLETELY DRY. SEDIMENT SHOULD BE DISPOSED OF PROPERLY AND ONCE SEDIMENT IS REMOVED, DISTURBED AREAS NEED TO BE IMMEDIATELY STABILIZED AND REVEGETATED.
10. INSPECTIONS OF THE BASIN SHALL BE CONDUCTED WITHIN 72 HOURS AFTER EVERY STORM EVENT OF GREATER THAN ONE (1) INCH OF RAIN, OR TWICE PER YEAR AT A MINIMUM.
    A. INSPECT AND CORRECT EROSION PROBLEMS, DAMAGE TO VEGETATION, AND THE GROWTH OF UNWANTED OR INVASIVE VEGETATION
    B. ALL BASIN STRUCTURES EXPECTED TO RECEIVE AND/OR TRAP DEBRIS AND SEDIMENT, INCLUDING THE BASIN BOTTOM, TRASH RACKS, OUTLETS STRUCTURES, RIPRAP OR GABION STRUCTURES, AND INLETS, SHOULD BE INSPECTED FOR CLOGGING AND EXCESSIVE DEBRIS AND SEDIMENT ACCUMULATION. SEDIMENT ACCUMULATION SHALL BE ADDRESSED WHEN SEDIMENT IS GREATER THAN 3 INCHES DEEP AT ANY SPOT OR IS COVERING VEGETATION.
    C. INSPECT FOR CONFORMANCE WITH ORIGINAL DESIGN CROSS-SECTION AND CORRECT AS NEEDED.
    D. INSPECT ALL PIPES, CATCH BASINS, INLET AND OUTLET STRUCTURES FOR DEFICIENCIES AND REPAIR OR REPLACE IF REQUIRED. COMMON DEFICIENCIES INCLUDE BROKEN CONCRETE, CRUSHED OR RUSTED PIPES, MISSING GROUT, OR BLOCKAGES CAUSED BY LITTER OR FOREIGN MATERIALS.
11. ACCESS SHALL BE GRANTED TO ALL AUTHORIZED LOCAL, STATE, AND FEDERAL AGENCIES FOR BMP INSPECTIONS AT REASONABLE TIMES AND WITH REASONABLE FREQUENCY.
12. WRITTEN REPORTS DOCUMENTING ALL INSPECTIONS, REPAIRS, AND MAINTENANCE ACTIVITIES SHALL BE MAINTAINED ON SITE BY THE PROPERTY OWNER AT ALL TIMES.
13. INSPECT AND MAINTAIN RETAINING WALL IN DESIGN CONDITION. KEEP DRAINAGE PIPES AND ANY WEEP HOLES OPEN. FILL IN AND STABILIZE ANY ERODED AREAS. ANY SIGNS OF WALL MOVEMENT OR SLOPE SLIPPAGE SUCH AS WALL CRACKING, BULGING, LEANING, OR SETTLING, SHALL BE INSPECTED BY A LICENSED PROFESSIONAL AND REPORTED TO NORTHERN LEBANON TOWNSHIP. CORRECTIONS SHALL BE MADE AS NECESSARY. REMOVE ANY TREE GROWTH WITHIN 20' OF WALL.

C. INFILTRATION TRENCHES

1. REGULARLY CLEAN OUT ROOF GUTTER SYSTEMS WHICH ARE CONNECTED TO INFILTRATION FACILITY.
2. CLEAN AND/OR REPLACE FILTER SCREENS THAT INTERCEPT ROOF RUNOFF AS NECESSARY.
3. CATCH BASINS, INLETS, AND CLEANOUTS UPGRADIENT OF THE INFILTRATION FACILITIES SHOULD BE INSPECTED AND CLEANED AS NECESSARY OR AT LEAST TWO TIMES PER YEAR AND AFTER RUNOFF EVENTS OF GREATER THAN ONE (1) INCH OF RAIN.
4. VEGETATION ALONG THE SURFACE OF THE INFILTRATION FACILITY SHALL BE MAINTAINED IN GOOD CONDITION. MOW TO ENSURE SAFETY, AESTHETICS, PROPER FACILITY OPERATION, AND TO SUPPRESS WEEDS AND INVASIVE VEGETATION. DISPOSE OF CUTTINGS IN A LOCAL COMPOSTING FACILITY. MOW ONLY WHEN THE AREA IS DRY TO AVOID RUTTING.
5. CARE SHALL BE TAKEN TO AVOID COMPACTION BY MOWERS. VEHICULAR ACCESS ON THE SURFACE ABOVE THE INFILTRATION AREA SHALL BE PROHIBITED.
6. RESEED BARE AREAS USING NATIVE GRASS SPECIES. INSTALL APPROPRIATE EROSION CONTROL MEASURES WHEN NATIVE SOIL IS EXPOSED, OR EROSION CHANNELS ARE FORMING.
7. IT MAY BE NECESSARY TO WATER THE VEGETATION ABOVE THE INFILTRATION FACILITY DURING DRY PERIODS TO MAINTAIN VEGETATIVE HEALTH.
8. INSPECTIONS OF THE INFILTRATION FACILITIES SHALL BE CONDUCTED WITHIN 72 HOURS AFTER EVERY STORM EVENT OF GREATER THAN ONE (1) INCH OF RAIN, OR FOUR TIMES PER YEAR AT A MINIMUM.
    A. INSPECT AND CORRECT EROSION PROBLEMS, SUBSIDENCE, SINKHOLES, DAMAGE TO VEGETATION, AND THE GROWTH OF UNWANTED OR INVASIVE VEGETATION.
    B. VERIFY THAT ALL WATER IN THE FACILITY HAS DRAINED DOWN WITHIN 72 HOURS AFTER THE RAINFALL EVENT. IF DRAW-DOWN TIMES ARE EXCEEDING 72 HOURS, DRAIN THE FACILITY VIA PUMPING AND CLEAN OUT ANY PERFORATED PIPING OR OTHER STORAGE STRUCTURES. IF SLOW DRAINAGE PERSISTS, THE FACILITY MAY REQUIRE REPLACEMENT.
    C. ALL STRUCTURES EXPECTED TO RECEIVE AND/OR TRAP DEBRIS AND SEDIMENT, INCLUDING CATCH BASINS, INLETS, CLEANOUTS, PIPES AND OTHER STORAGE STRUCTURES SHOULD BE INSPECTED FOR CLOGGING AND EXCESSIVE DEBRIS AND SEDIMENT ACCUMULATION. SEDIMENT ACCUMULATION SHALL BE ADDRESSED WHEN SEDIMENT IS GREATER THAN 3 INCHES DEEP. DISPOSE OF SEDIMENT AND DEBRIS IN COMPLIANCE WITH LOCAL, STATE AND FEDERAL REGULATIONS.
    D. INSPECT ALL PIPES, CATCH BASINS, INLETS, CLEANOUTS AND OUTLET STRUCTURES FOR DEFICIENCIES AND REPAIR OR REPLACE IF REQUIRED. COMMON DEFICIENCIES INCLUDE BROKEN CONCRETE, CRUSHED OR RUSTED PIPES, MISSING GROUT, OR BLOCKAGES CAUSED BY LITTER OR FOREIGN MATERIALS.
    E. NOTIFY MUNICIPAL OFFICIALS IF THERE IS EVIDENCE OF WATER CONTAMINATION OR HAZARDOUS MATERIAL SPILLS.
9. ACCESS SHALL BE GRANTED TO ALL AUTHORIZED LOCAL, STATE, AND FEDERAL AGENCIES FOR BMP INSPECTIONS AT REASONABLE TIMES AND WITH REASONABLE FREQUENCY.
10. WRITTEN REPORTS DOCUMENTING ALL INSPECTIONS, REPAIRS, AND MAINTENANCE ACTIVITIES SHALL BE MAINTAINED ON SITE BY THE PROPERTY OWNER AT ALL TIMES.

D. PROTECT SENSITIVE/SPECAIL VALUE RESOURCES (WETLANDS)

1. EXISTING NATIVE VEGETATION SHALL BE PROTECTED AND MAINTAINED. NOTHING SHALL BE PUT WITHIN THIS AREA THAT WOULD ALTER THEIR FUNCTION OR ALTER EXISTING DRAINAGE CONDITIONS.
2. TREES MAY BE PRUNED OR REMOVED WHEN DEAD OR DISEASED. WHENEVER PRACTICABLE, INVASIVE VEGETATION SHALL BE REMOVED.
3. THE WETLANDS MAY BE SUPPLEMENTED WITH NATIVE TREES, SHRUBS AND OTHER VEGETATION TO CREATE A DIVERSE NATIVE PLANT COMMUNITY APPROPRIATE TO THE ECOLOGICAL CONTEXT OF THE AREA.

E. INSPECTION REPORTS, ETC.

1. MAINTAIN A RECORD OF ALL INSPECTIONS, REPAIRS AND MAINTENANCE ACTIVITIES ASSOCIATED WITH THE BMPS. THE OWNER SHALL IMMEDIATELY NOTIFY NORTH LEBANON TOWNSHIP PRIOR TO INITIATING ANY MAJOR REPAIR ACTIVITIES (SUCH AS REPAIRS THAT MAY BE REQUIRED AS A RESULT OF SETTLEMENT, SINKHOLES OR SEEPS).
2. ALL INSPECTION REPORTS SHALL BE SUBMITTED TO NORTH LEBANON TOWNSHIP WITHIN 30 DAYS OF THE INSPECTION.
3. WHENEVER POSSIBLE, RECYCLING IS PREFERRED RATHER THAN DISPOSAL OF DEBRIS. DEBRIS SHALL BE RECYCLED OR DISPOSED OF IN ACCORDANCE WITH DEP'S SOLID WASTE MANAGEMENT REGULATIONS. DO NOT BURY, DUMP OR DISCHARGE ANY WASTE.
4. REPAIRS AND REPLACEMENTS OF BMPS SHALL MEET OR EXCEED THE STANDARDS CONTAINED WITHIN THE PCSM PLAN.

LEBANON COUNTY / N. LEB. TWP. – STORMWATER MANAGEMENT BEST MANAGEMENT PRACTICES (BMP) OPERATION AND MAINTENANCE (O&M) AGREEMENT

THIS AGREEMENT, made and entered into this _____ day of _____, 20__, by and between Mount Pleasant Ventures, LLC, (hereinafter the "Landowner"), and the subject approval agency, Lebanon County; Pennsylvania, (hereinafter "County"), and the Township of North Lebanon, Lebanon County (hereinafter "Municipality)

WITNESSETH

WHEREAS, the Landowner is the owner of properties located at 1013 East Maple Street Lebanon, PA 17046 and at 935 East Maple Street Lebanon, PA 17046, North Lebanon Township as recorded by deed in the land records of Lebanon County, Pennsylvania, Deed Book 02248 at Page 4961, (hereinafter "Property").

WHEREAS, the Landowner is proceeding to build and develop the Property; and

WHEREAS, the Subdivision/Land Development/Stormwater Management (SWM) Site Plan (hereinafter "Plan") for Mapledale Estates, Plan Book _____ Page _____, which is expressly made a part hereof, as approved or to be approved by Lebanon County and Municipality, provides for management of stormwater within the confines of the Property; and

WHEREAS, the SWM Best Management Practices (BMP) Operation and Maintenance Plan (hereinafter referred to as the "O&M Plan") approved by the County and Municipality for the property identified herein, provides for management of stormwater within the confines of the Property through the use of BMPs; and

WHEREAS, the County, Municipality, and the Landowner, their successors and assigns agree that the health, safety, and welfare of the residents of the County and Municipality and the protection and maintenance of water quality require that on-site SWM (BMPs) be constructed and maintained on the Property: and

WHEREAS, the County and Municipality requires, that stormwater management facilities as shown on the Plan be constructed and adequately maintained by the Landowner, their successors and assigns; and

WHEREAS, the County and Municipality requires, through the implementation of the SWM Site Plan, that SWM BMPs as required by said SWM Site Plan and the Lebanon County Stormwater Management Ordinance be constructed and adequately operated and maintained by the Landowner, successors, and assigns.

NOW, THEREFORE, in consideration of the foregoing premises, the mutual covenants contained herein, and the following terms and conditions, the parties hereto agree as follows:

1. The Landowner, their successors and assigns, shall operate and maintain the stormwater management BMPs as shown on the subdivision/land development/SWM Site Plan in good working condition in accordance with the specific operation and maintenance requirements noted in the approved O&M Plan.

2. The Landowner, their successors and assigns, hereby grants permission to the Municipality, Lebanon County Planning Department, and the Lebanon County Engineer, their authorized agents and employees, upon presentation of proper identification, to enter upon the Property at reasonable times, and to inspect the SWM BMPs whenever deemed necessary. Whenever possible, the Municipality, Lebanon County Planning Department, or the Lebanon County Engineer shall notify the Landowner prior to entering the Property. The purpose of the inspection is to assure safe and proper functioning of the SWM BMPs. The inspection shall cover the entire facilities, pipes, berms, outlet structures, pond areas, access roads, etc. When inspections are conducted, the Municipality, Lebanon County Planning Department, and/or the Lebanon County Engineer shall give the Landowner, their successors and assigns, copies of the inspection report with findings and evaluations. At a minimum, this agreement grants the Municipality, Lebanon County Planning Department, and/or the Lebanon County Engineer the right to perform inspections in accordance with the following schedule:

- Annually for the first 5 years after the construction of the stormwater facilities,
- Once every 3 years thereafter, or
- During or immediately upon the cessation of a 10 year or greater precipitation event.

3. All reasonable costs for said inspections shall be borne by the Landowner and payable to the inspecting agency.

4. The owner shall convey to the County and Municipality easements and/or rights-of-way to assure access for periodic inspections and maintenance by the Municipality and County, if required.

5. In the event the Landowner, their successors and assigns, fails to maintain the SWM BMPs in good working condition acceptable to the Municipality, the County, or its representatives, may enter upon the Property and take such necessary and prudent action to maintain said SWM BMPs and to charge the costs of the maintenance and/or repairs to the Landowner, their successors and assigns. This provision shall not be construed as to allow the Municipality or County to erect any structure of a permanent nature on the land of the Landowner, outside of any easement belonging to the Municipality or County. It is expressly understood and agreed that the Municipality or County is under no obligation to maintain or repair said facilities, and in no event shall this Agreement be construed to impose any such obligation on the Municipality or County.

6. The Landowner, their successors and assigns, will perform maintenance in accordance with the maintenance schedule for the SWM BMPs including sediment removal as outlined on the approved schedule and/or Subdivision/Land Development/SWM Site Plan.

7. In the event the Municipality or County, pursuant to this Agreement, performs work of any nature, or expends any funds in performance of said work for labor, use of equipment, supplies, materials, engineering fees, attorney fees, and the like on account of the Landowner's or their successors' and assigns' failure to perform such work, the Landowner, their successors and assigns, shall reimburse the Municipality or County upon demand, within 10 days of receipt of invoice thereof, for all costs incurred by the Municipality or County hereunder. If not paid within said 10-day period, the Municipality or County may enter a lien against the property in the amount of such costs, or may proceed to recover their costs through proceedings in equity or at law as authorized under the applicable provisions of the Pennsylvania Municipal Code.

8. The Landowner, their successors and assigns, shall indemnify the Municipality and County and their agents and employees against any and all damages, accidents, casualties, occurrences or claims, which might arise or be asserted against the Municipality or County for the construction, presence, existence or maintenance of the stormwater management facilities by the Landowner, their successors and assigns.

9. In the event a claim is asserted against the Municipality or County, its agents or employees, the Municipality or County shall promptly notify the Landowner, their successors and assigns, and they shall defend, at their own expense, any suit based on such claim. If any judgment or claim is entered against the Municipality, County, or its agents or employees, the Landowner, their successors and assigns shall pay all costs and expenses in connection therewith.

10. In the advent of an emergency or the occurrence of special or unusual circumstances or situations, the Municipality or County may enter the Property, if the Landowner is not immediately available, without notification or identification, to inspect and perform necessary maintenance and repairs, if needed, when the health, safety or welfare of the citizens is at jeopardy. However, the Municipality or County shall notify the landowner of any inspection, maintenance, or repair undertaken within 5 days of the activity. The Landowner shall reimburse the agency undertaking the inspections, maintenance or repairs for any associated fees and costs.

11. The intent and purpose of this Agreement is to ensure the proper maintenance of the onsite BMPs by the Landowner; provided, however, that this Agreement shall not be deemed to create or affect any additional liability of any party for damage alleged to result from or be caused by stormwater runoff.

12. The Landowner, their executors, administrators, assigns, and other successors in interests and title, shall release the Municipality, Lebanon County Planning Department, and Lebanon County Engineer from all damages, accidents, casualties, occurrences, or claims which might arise or be asserted against said employees and representatives from the construction, presence, existence, or maintenance of the BMP(s) by the Landowner, Municipality or County.

This Agreement shall be recorded along with the final Land Development Plans in the land records of Lebanon County, Pennsylvania and shall constitute a covenant running with the Property and/or equitable servitude, and shall be binding on the Landowner, their administrators, executors, assigns, heirs and any other successors in interests, in perpetuity.

NO.	DATE	REVISION
3	12-21-21	REVISED PER N. LEB. TWP., LEB. CNTY. ENG. & THE REVISED WALL DESIGN
2	9-29-21	REVISED PER SEWER AUTH, N. LEB. TWP., LEB. CNTY. ENG. & THE REVISED WALL DESIGN
1	6-18-21	REVISED PER LCCD, DEP, SEWER AUTH., N. LEB. TWP., & LCPD

FOR PIONEER MANAGEMENT BY:

MANAGER: JAMES C. HENKE
SURV. CHIEF:
FIELDBOOK NO.
DESIGN BY: JDB/KWG
CHKD BY: JDB/JCH
DRAWN BY: JDB/MLS
CHKD BY: JCH
DRAWING REFERENCE: Z:\18-19-2000-01\CAD\Final Plan\Details.dwg
XREFS: TB1 [Z:\18-19-2000-01\CAD\Final Plan\X-Xtnts\TB.dwg]

CLIENT
MR. S. GERALD MUSSER
144 BELL ROAD
PALMYRA, PA 17078
(717) 821-1129

SCALE
AS NOTED

PIONEER Management, LLC
717 Millersville Road, Lancaster, PA 17603
Phone: 717-481-4955 Fax: 717-481-4955
Email: jb@pioneermanagementllc.com
Website: www.pioneermanagementllc.com

OPERATION AND MAINTENANCE AGREEMENT & NOTES
FOR THE FINAL SUBDIVISION AND LAND DEVELOPMENT PLAN OF
MAPLEDALE ESTATES
NORTH LEBANON TOWNSHIP LEBANON COUNTY, PA.

DATE: FEB. 25, 2021
SHEET NO. 30 OF 36
DWG. NO. 18-2000-01-B

ORIFICE PLATE

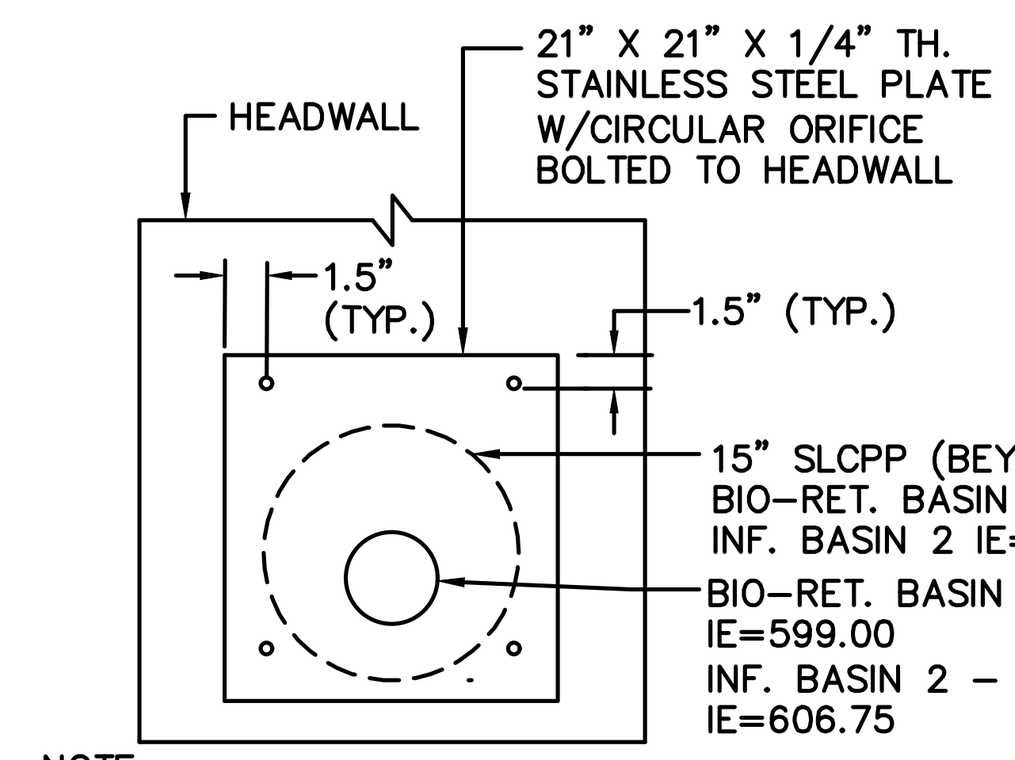

NOTE:
PROVIDE WATERTIGHT SEALANT BETWEEN ORIFICE PLATE AND CONCRETE HEADWALL.

ORIFICE PLATE

NOT TO SCALE

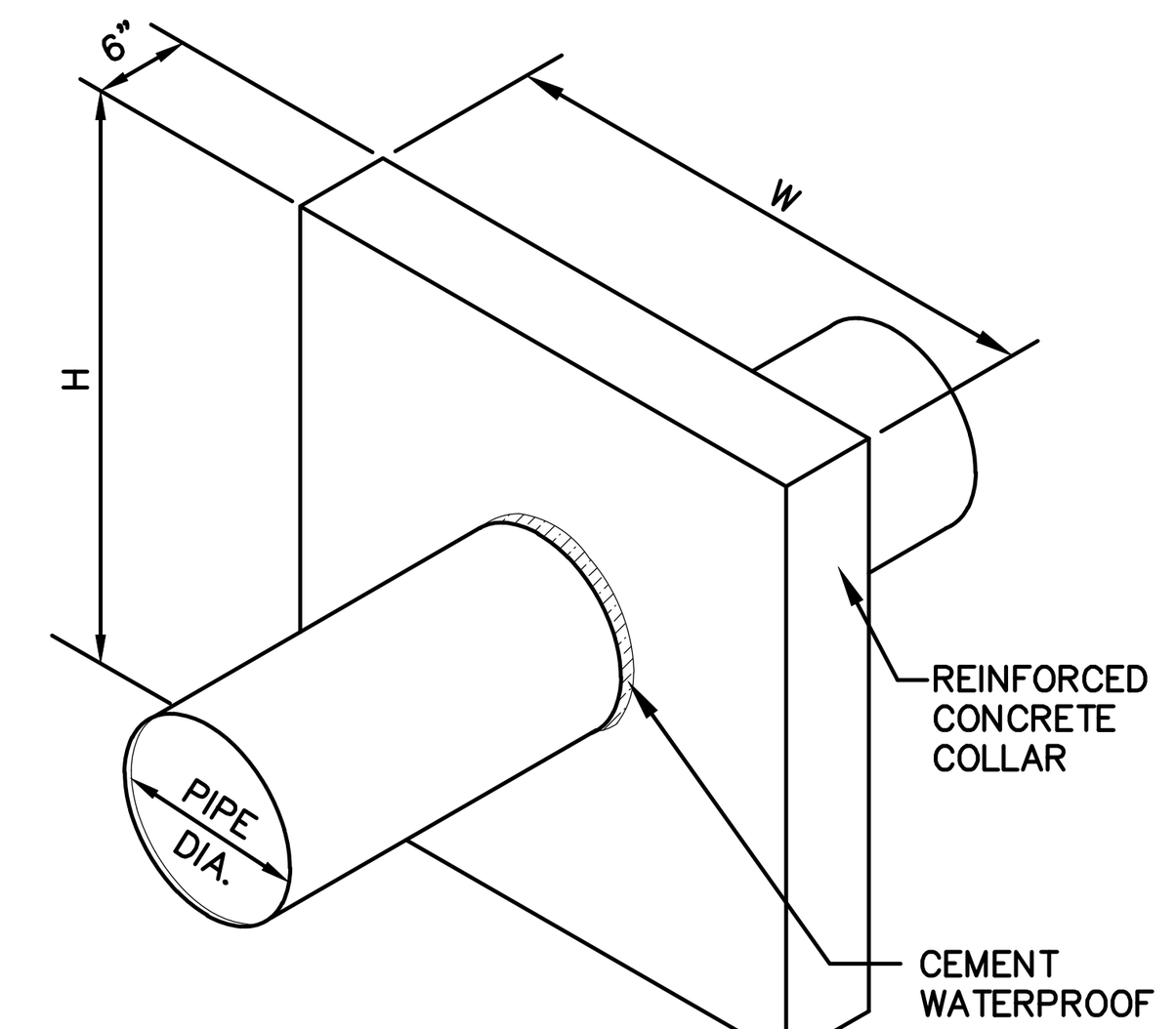

FACILITY	H (FT.)	W (FT.)
1	5.08	5.08
2	7.17	7.17

NOTES:
1. MIN. CONCRETE COMPRESSIVE STRENGTH = 3,750 P.S.I.
2. REINFORCEMENT SHALL BE 6x6 W4.0xW4.0 OR #3 REBAR SPACED 12" EACH WAY, CENTERED WITHIN COLLAR
3. SEE BASIN EMBANKMENT DETAIL FOR LOCATION.
4. COMPACT BACKFILL AROUND COLLAR TO 95% PROCTOR DENSITY.

REINFORCED CONCRETE ANTI-SEEP COLLAR

NOT TO SCALE

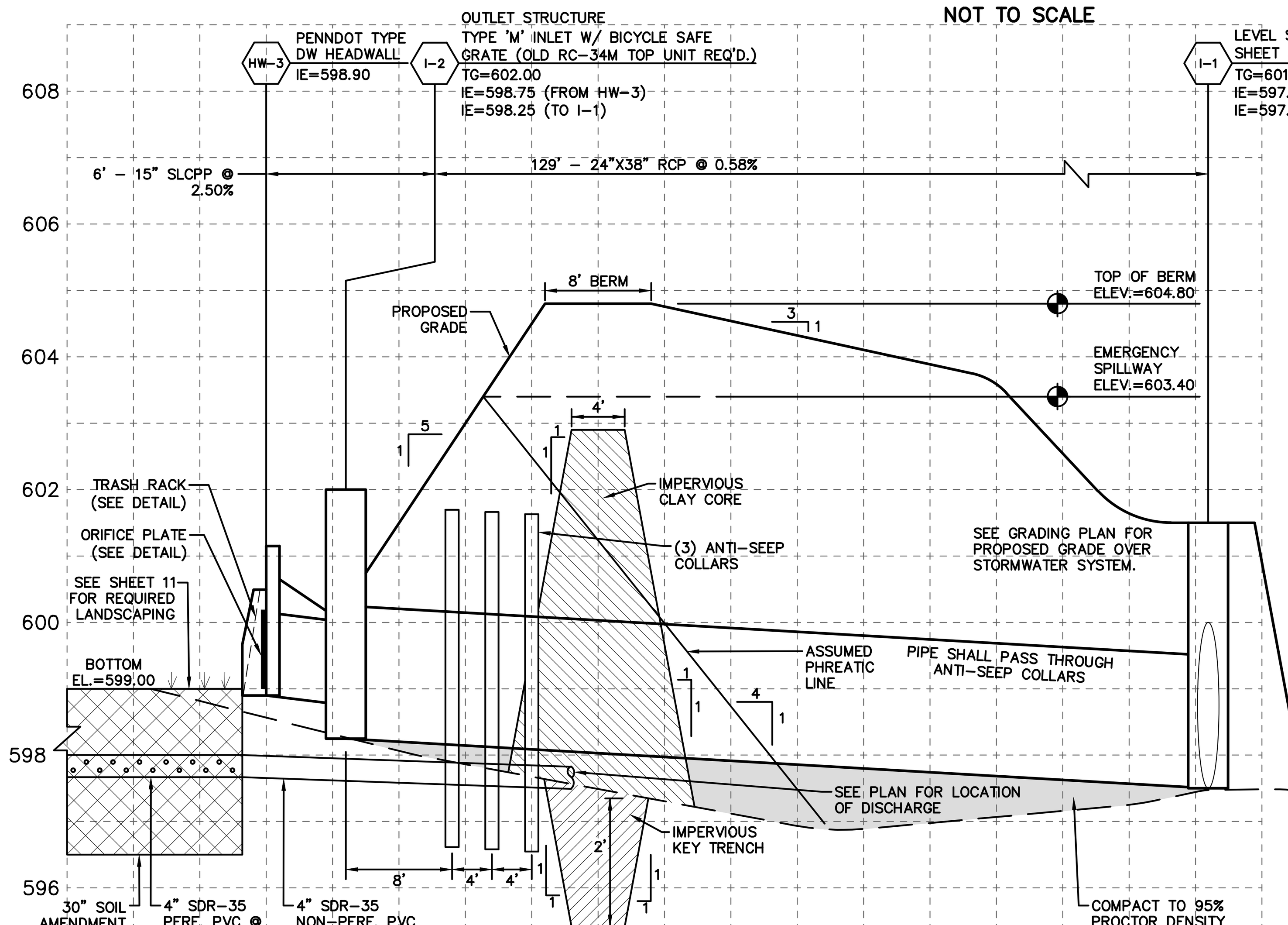

NOTES:
1. BASIN EMBANKMENT & BACKFILL AROUND ANTI-SEEP COLLARS SHALL BE COMPACTED TO 95% PROCTOR DENSITY.
2. CLAY CORE AND KEY TRENCH SHALL EXTEND ENTIRE LENGTH OF BASIN BERM.
3. ENSURE PROPER COMPACTION AROUND OUTLET STRUCTURE AND ENDWALLS IN BASIN.
4. UNDERDRAIN SHALL PASS THROUGH ANTI-SEEP COLLARS.

BIO-RETENTION BASIN #1 EMBANKMENT SECTION (BMP)

SCALE: HORIZ. - 1"=10'
VERT. - 1"=2'

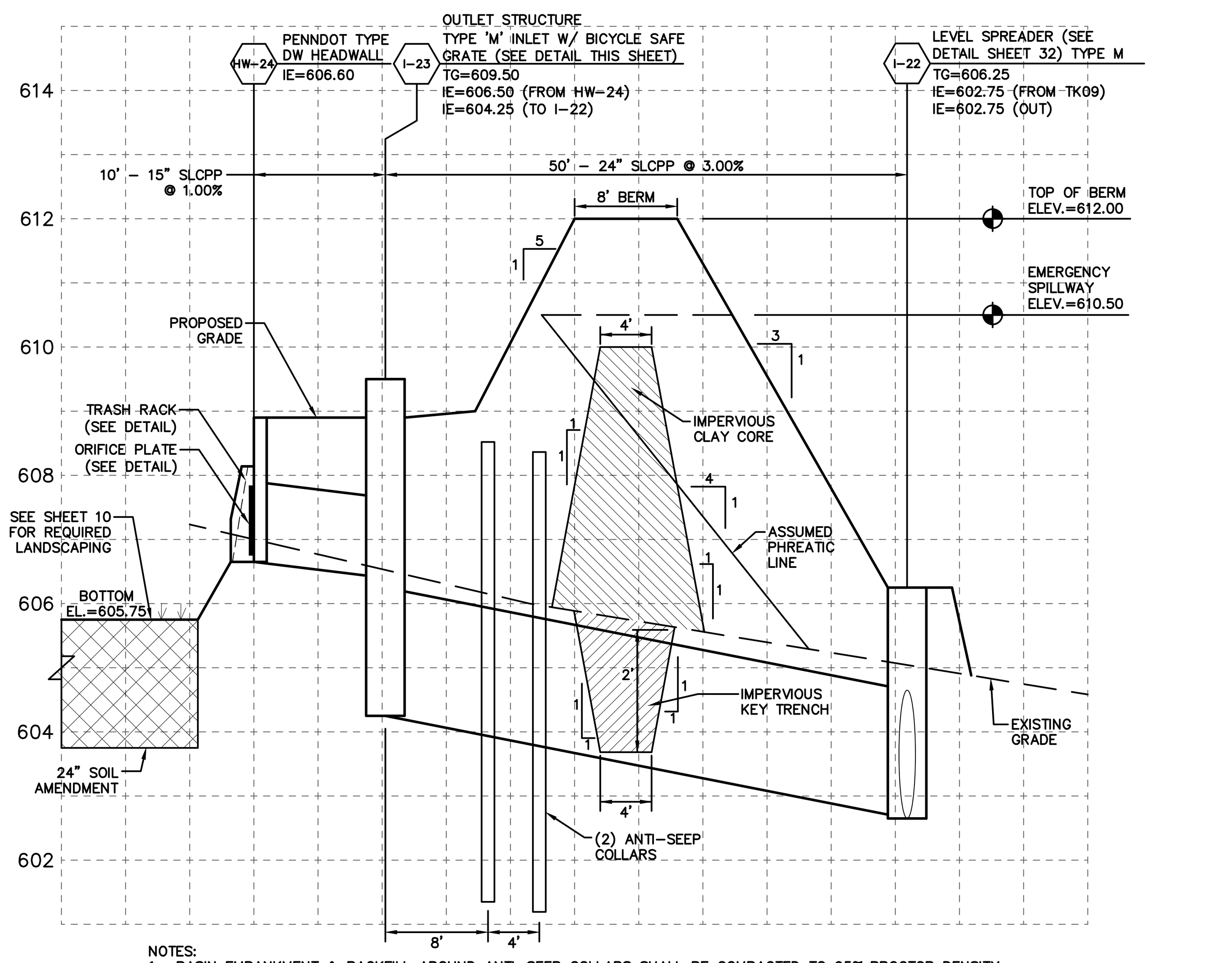

NOTES:
1. BASIN EMBANKMENT & BACKFILL AROUND ANTI-SEEP COLLARS SHALL BE COMPACTED TO 95% PROCTOR DENSITY.
2. CLAY CORE AND KEY TRENCH SHALL EXTEND ENTIRE LENGTH OF BASIN BERM.
3. ENSURE PROPER COMPACTION AROUND OUTLET STRUCTURE AND ENDWALLS IN BASIN.

INFILTRATION BASIN #2 EMBANKMENT SECTION (BMP)

SCALE: HORIZ. - 1"=10'
VERT. - 1"=2'

ROCK FILTER NO.	LOCATION	D (FT)	RIPRAP SIZE
NA	BASIN 1 & 2	1.5	4

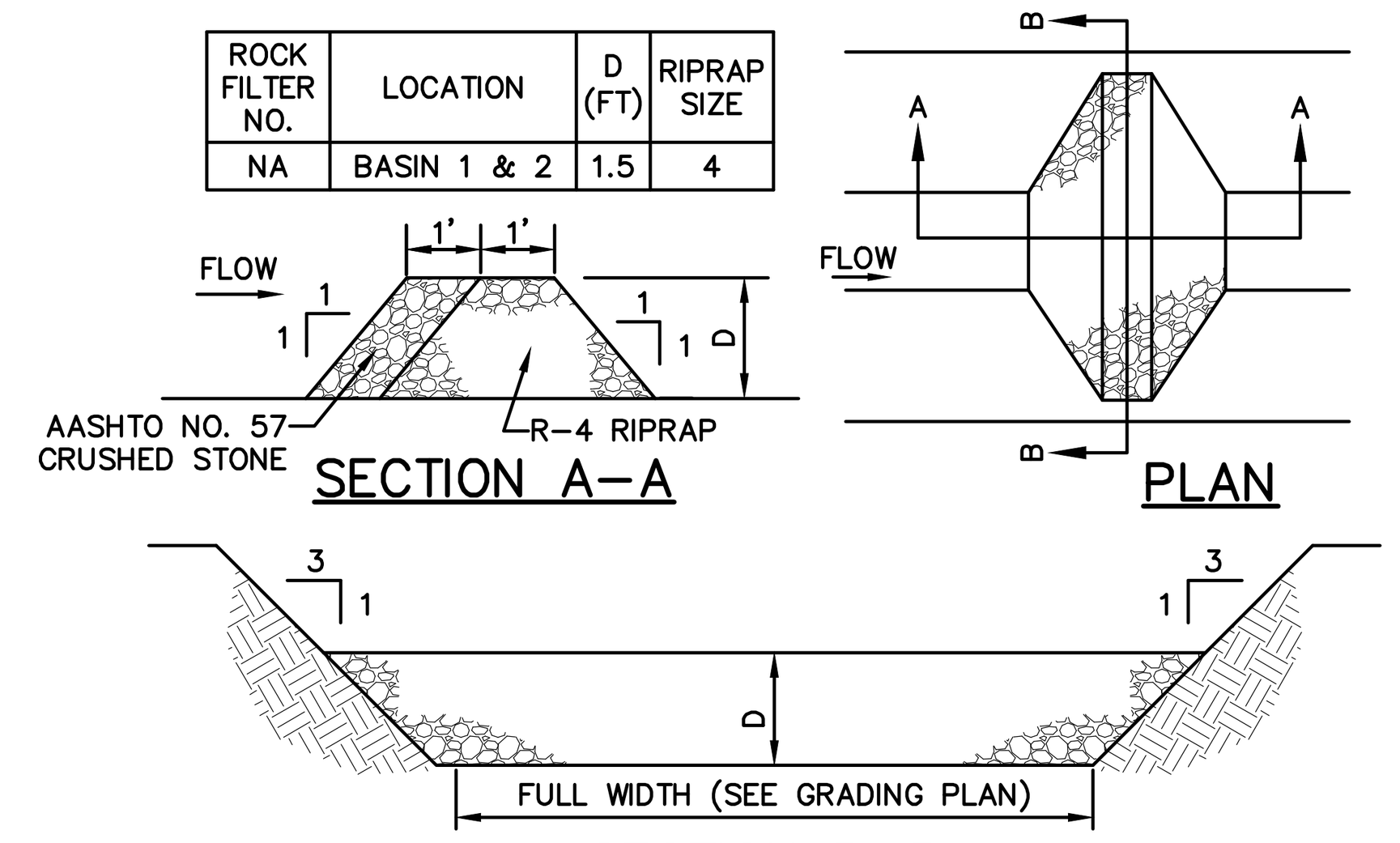

NOTE: SEDIMENT MUST BE REMOVED WHEN ACCUMULATIONS REACH 1/2 THE HEIGHT OF THE FILTER

PERMANENT ROCK FILTER

NOT TO SCALE

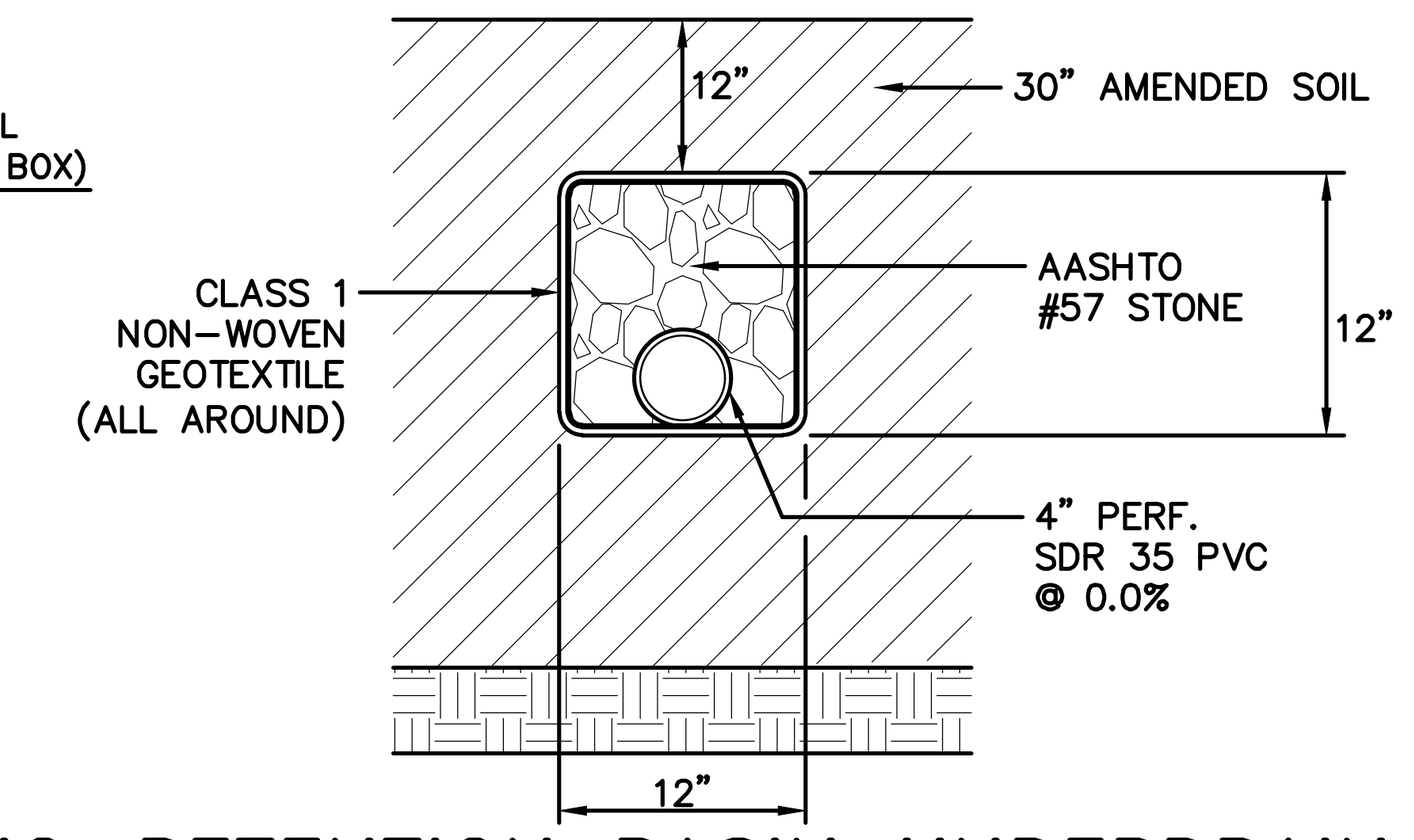

BIO-RETENTION BASIN UNDERDRAIN

NOT TO SCALE

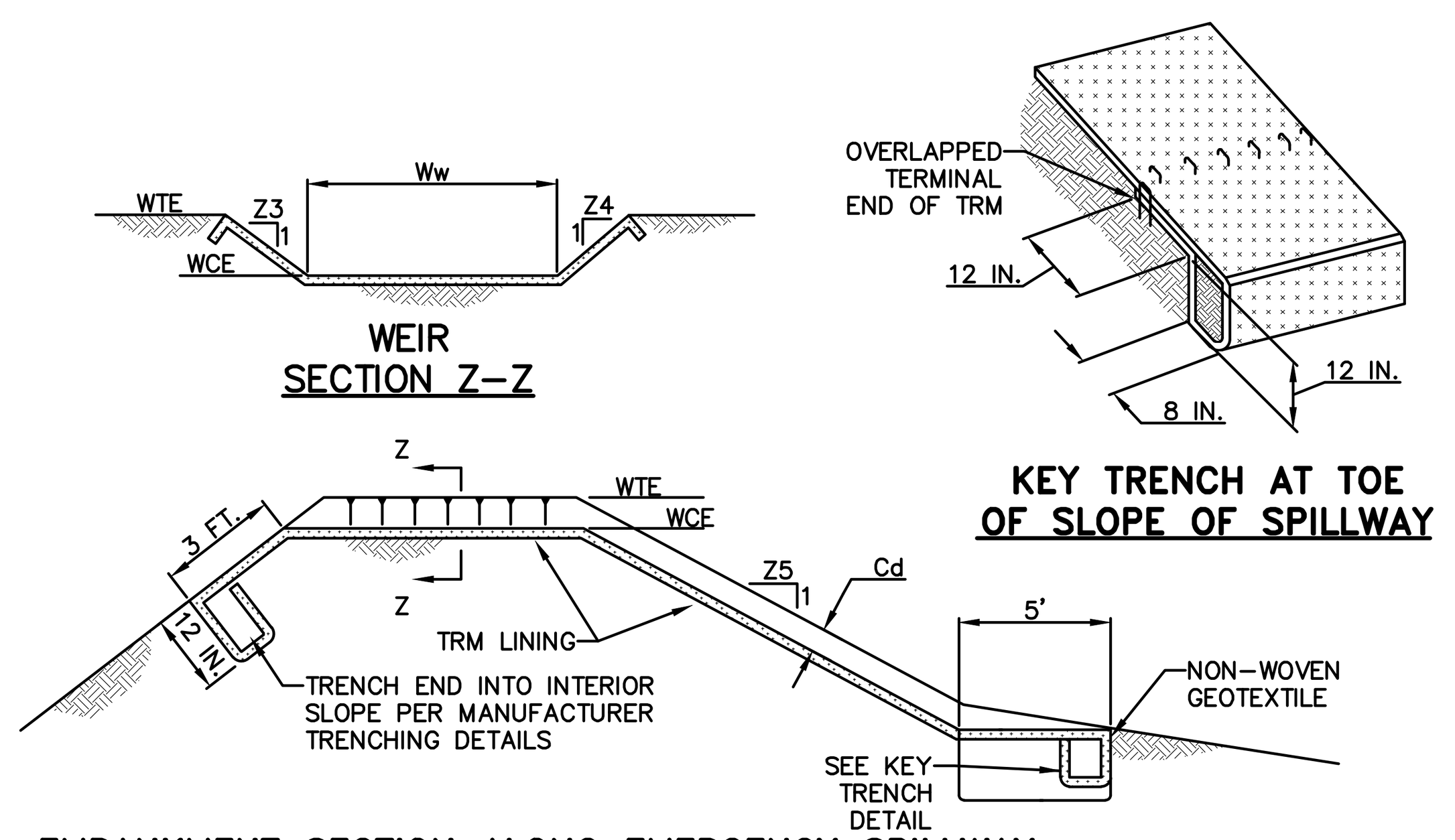

EMBANKMENT SECTION ALONG EMERGENCY SPILLWAY
SECTION X-X

BASIN NO.	WEIR					LINING		CHANNEL		DISSIPATOR			
	Z3 (FT)	Z4 (FT)	TOP ELEV WTE (FT)	CREST ELEV WCE (FT)	WIDTH Ww (FT)	TRM TYPE	STAPLE PATTERN	Z5 (FT)	DEPTH Cd (FT)	LENGTH Dl (FT)	WIDTH Dw (FT)	RIPRAP SIZE (R-_)	RIPRAP THICK. DRt (IN)
1	5	5	604.80	603.40	120	NAG P300	E	N/A	N/A	N/A	N/A	N/A	N/A
2	5	5	612.00	610.50	50	NAG C350	E	N/A	N/A	N/A	N/A	N/A	N/A

NOTES:
1. HEAVY EQUIPMENT SHALL NOT CROSS OVER SPILLWAY WITHOUT PRECAUTIONS TAKEN TO PROTECT TRM LINING.
2. DISPLACED LINER WITHIN THE SPILLWAY AND/OR OUTLET CHANNEL SHALL BE REPLACED IMMEDIATELY.
3. LINING AT TOE OF EMBANKMENT SHALL BE EXTENDED A SUFFICIENT LENGTH IN BOTH DIRECTIONS TO PREVENT SCOUR.

EMERGENCY SPILLWAY

NOT TO SCALE

LOT/ TRENCH NUMBER	TEST/ PROBE NUMBER	TOP OF TRENCH (A)	BOTTOM OF TRENCH (B)	DEPTH OF TRENCH	LENGTH (L)	WIDTH (W)
1	1,2	608.13	606.13	2.00	23.50	23.50
2	3	605.60	603.60	2.00	37.50	10.00
6	7	607.69	605.19	2.50	37.50	10.00
9	10	620.92	619.17	1.75	37.50	10.00
10	11	624.11	622.61	1.50	37.50	10.00
11	12	630.24	627.74	2.50	37.50	10.00
31	35	605.43	602.93	2.50	38.50	19.25
35	39	604.46	601.96	2.50	38.50	19.25
36	40	605.13	602.63	2.50	38.50	19.25
38	41	607.09	605.34	1.75	39.00	19.50

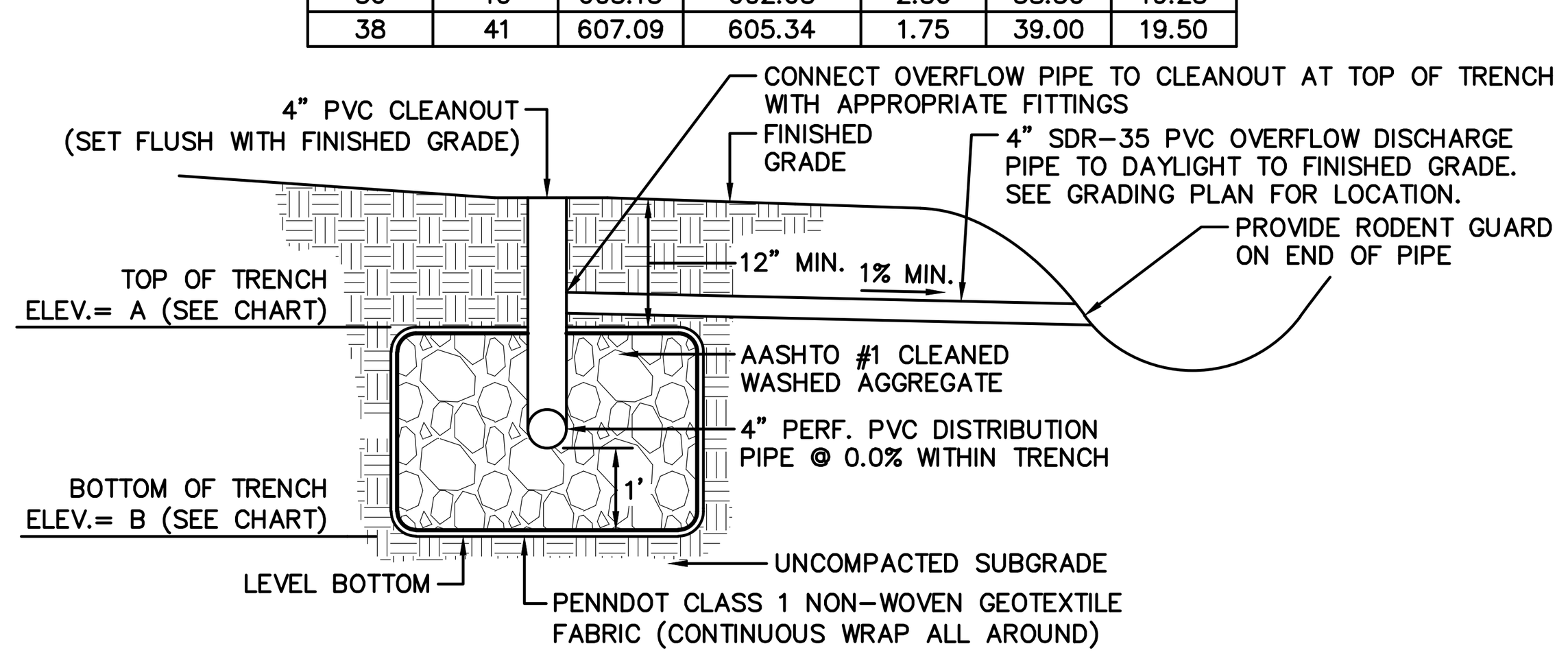

SECTION

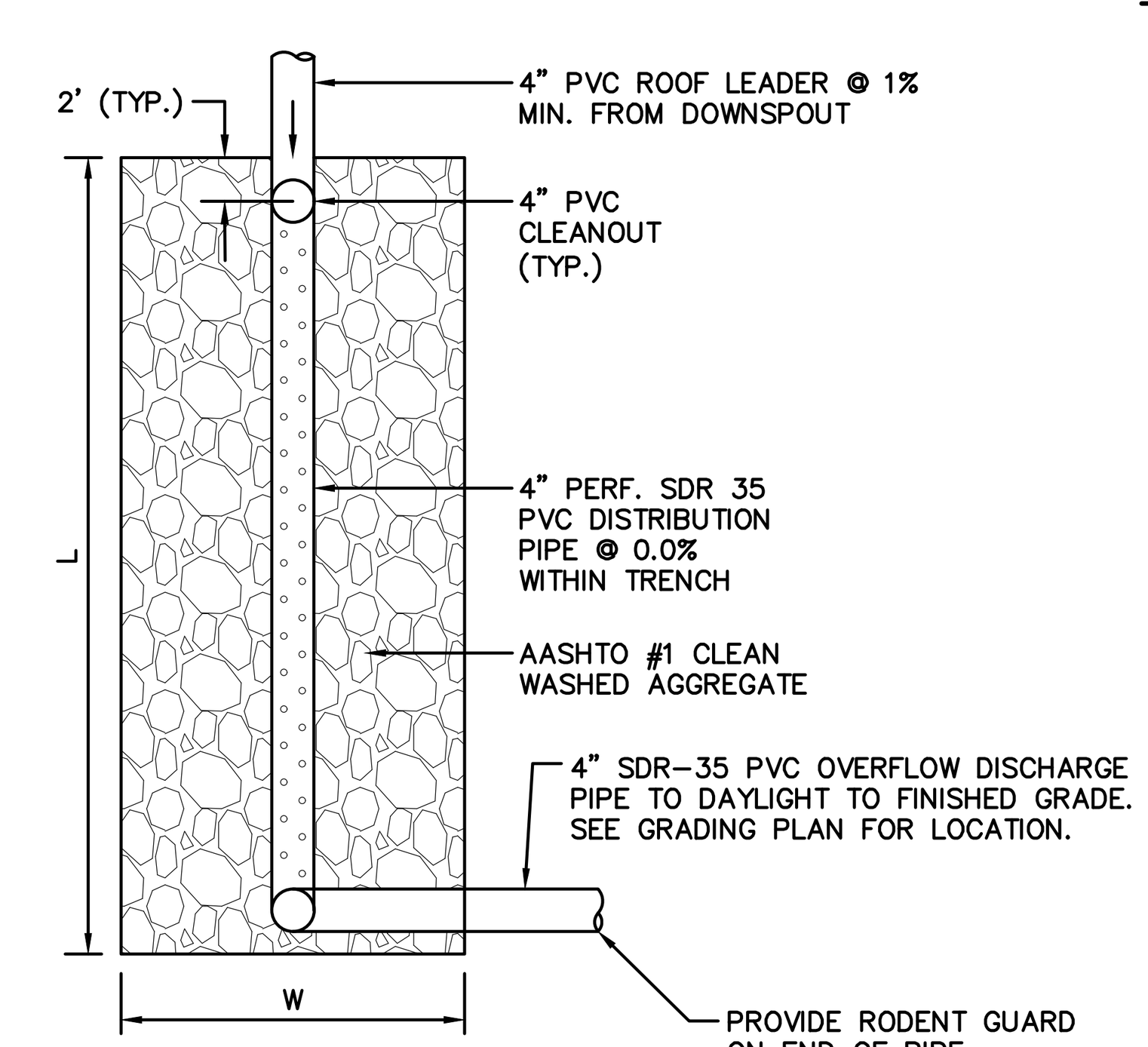

PLAN

NOTES:
1. ALL DOWNSPOUTS SHALL BE PROVIDED WITH SCREENS FOR LEAVES AND DEBRIS.
2. DOWNSPOUTS SHALL CONVEY ROOF RUNOFF TO THE TRENCH IN ACCORDANCE WITH THE DRAINAGE DIVIDES SHOWN ON SHEETS 16 & 17. EACH ENTIRE HOUSE ROOF IS ASSUMED TO BE 3,250 S.F.
3. THE PROPOSED INFILTRATION TRENCH MUST BE PROTECTED AT ALL TIMES AGAINST CONSTRUCTION EQUIPMENT, COMPACTION AND SEDIMENT LADEN RUN-OFF.
4. ALL ROOF LEADERS SHALL HAVE A MINIMUM OF 12" OF COVER.
5. MINIMUM SEPARATION BETWEEN TRENCH AND STRUCTURES SHALL BE 10'.

TYPICAL ON-LOT INFILTRATION TRENCH

NOT TO SCALE

OUTLET NO.	PIPE DIA (IN) Pd	RIPRAP		APRON	
		SIZE	THICK. Rt (IN)	LENGTH Al (FT)	TERMINAL WIDTH Atw (FT)
EW-4	30	R-4	18	16	23.5
EW-14A	15	R-4	18	10	13.75
EW-16	18	R-4	18	10	14.5
EW-25	36	R-4	18	20	29

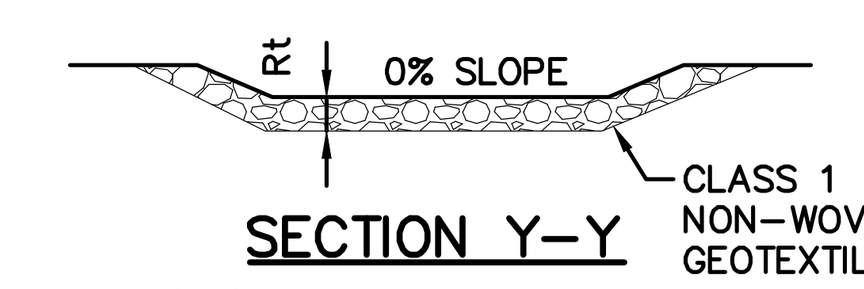

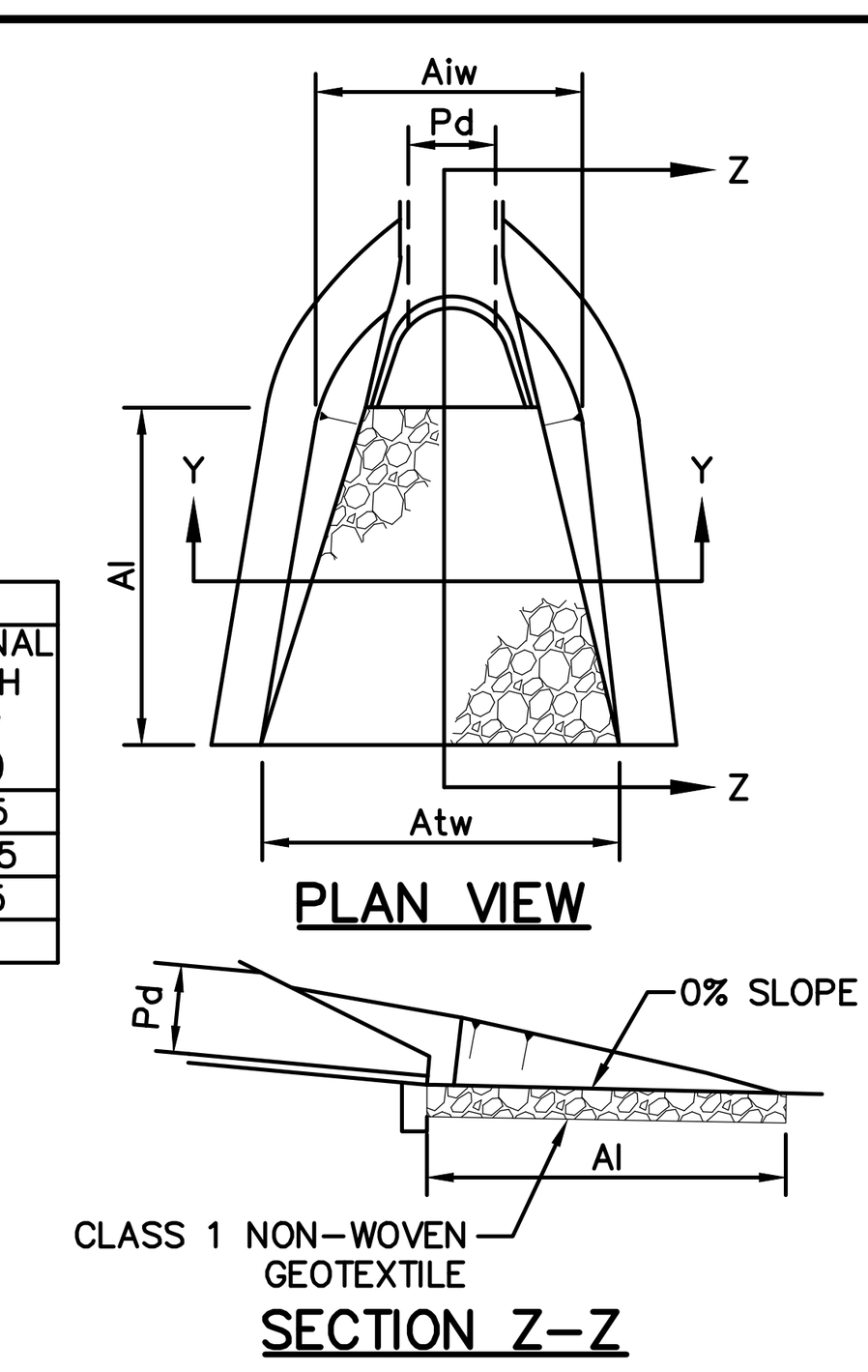

NOTES:
1. ALL APRONS SHALL BE CONSTRUCTED TO THE DIMENSIONS SHOWN. TERMINAL WIDTHS SHALL BE ADJUSTED AS NECESSARY TO MATCH RECEIVING CHANNELS.
2. ALL APRONS SHALL BE INSPECTED AT LEAST WEEKLY AND AFTER EACH RUNOFF EVENT. DISPLACED RIPRAP WITHIN THE APRON SHALL BE REPLACED IMMEDIATELY.

RIP-RAP AT PIPE OUTLET WITH ENDWALL

NOT TO SCALE

PIPE DIA.	L	W	A
15" & 18"	4.0'	4.0'	12"
24"	4.6'	4.25'	12"
36"	5.8'	4.6'	12"
42"	6.3'	5.8'	12"
48"	6.9'	6.9'	12"
54"	7.5'	8.0'	12"
60"	8.1'	9.2'	15"
72"	9.2'	11.5'	15"

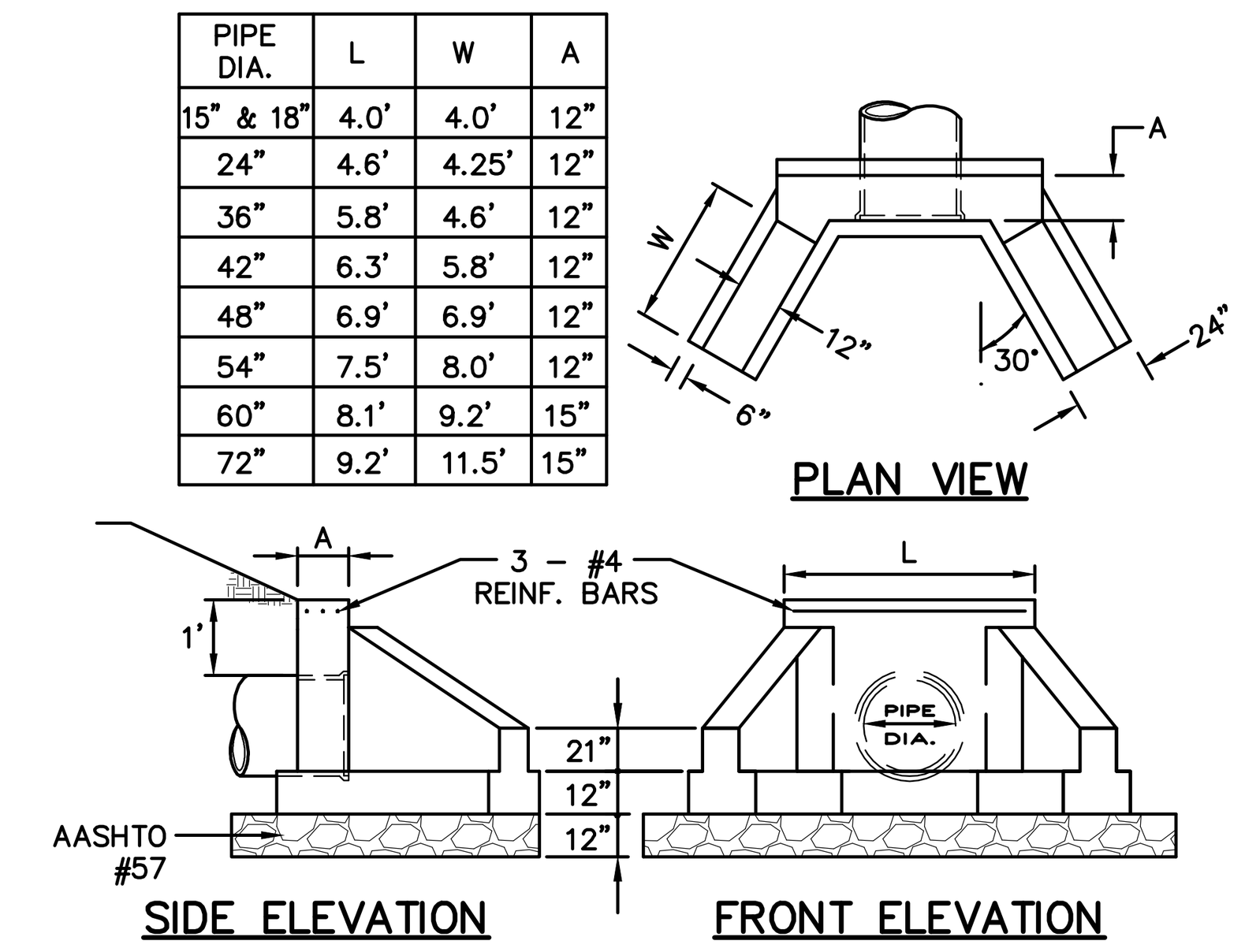

NOTE:
SEE STORM SEWER STRUCTURE NOTES ON THIS SHEET.

TYPE D-W HEADWALL/ENDWALL (RC-31)

NOT TO SCALE

PIPE DIAMETER	A	B	C
30" AND LESS	4'	5"	6"
36"	5'	6"	8"

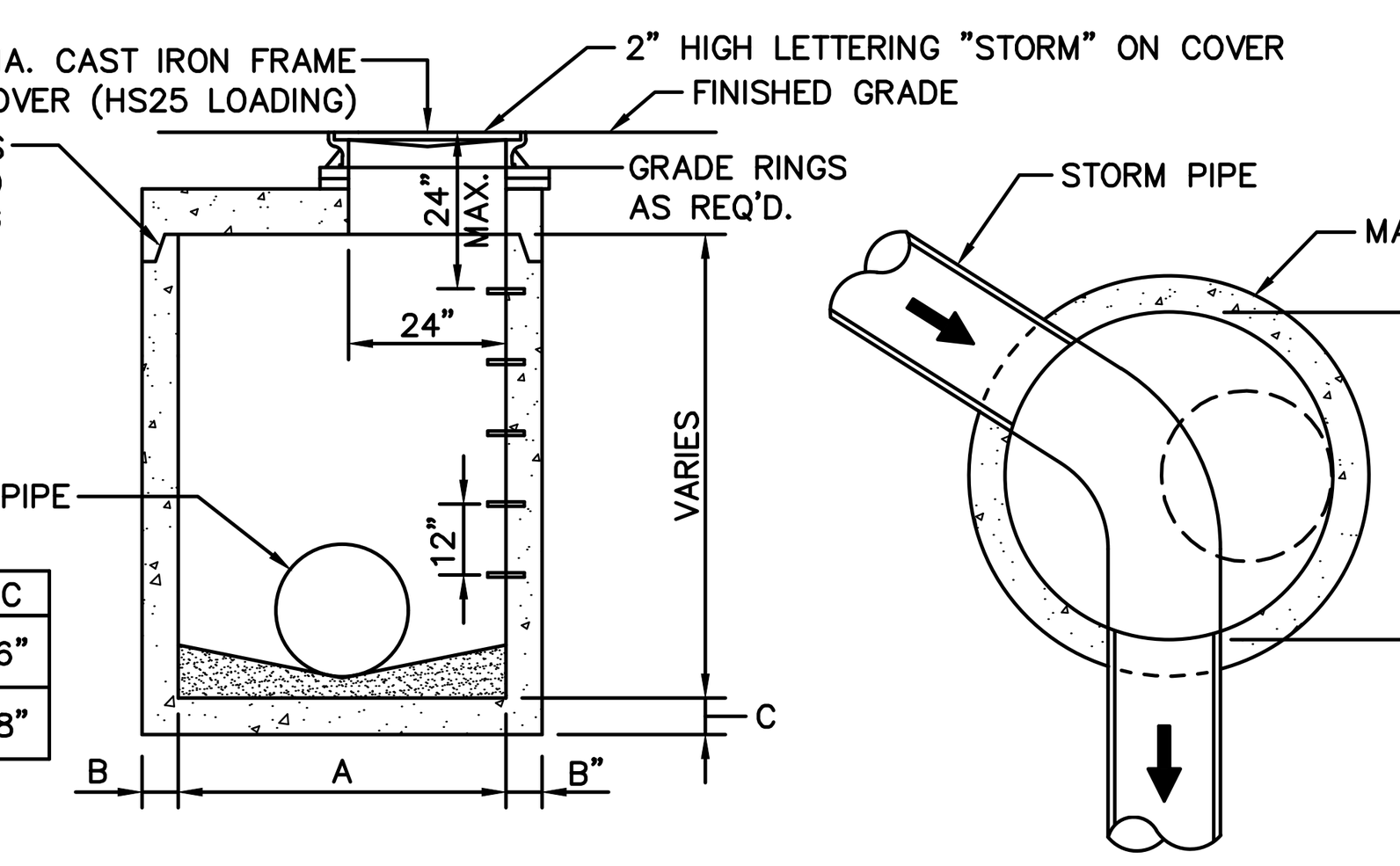

NOTE:
SEE STORM SEWER STRUCTURE NOTES ON THIS SHEET.

STORM MANHOLE (RC-39)

NOT TO SCALE

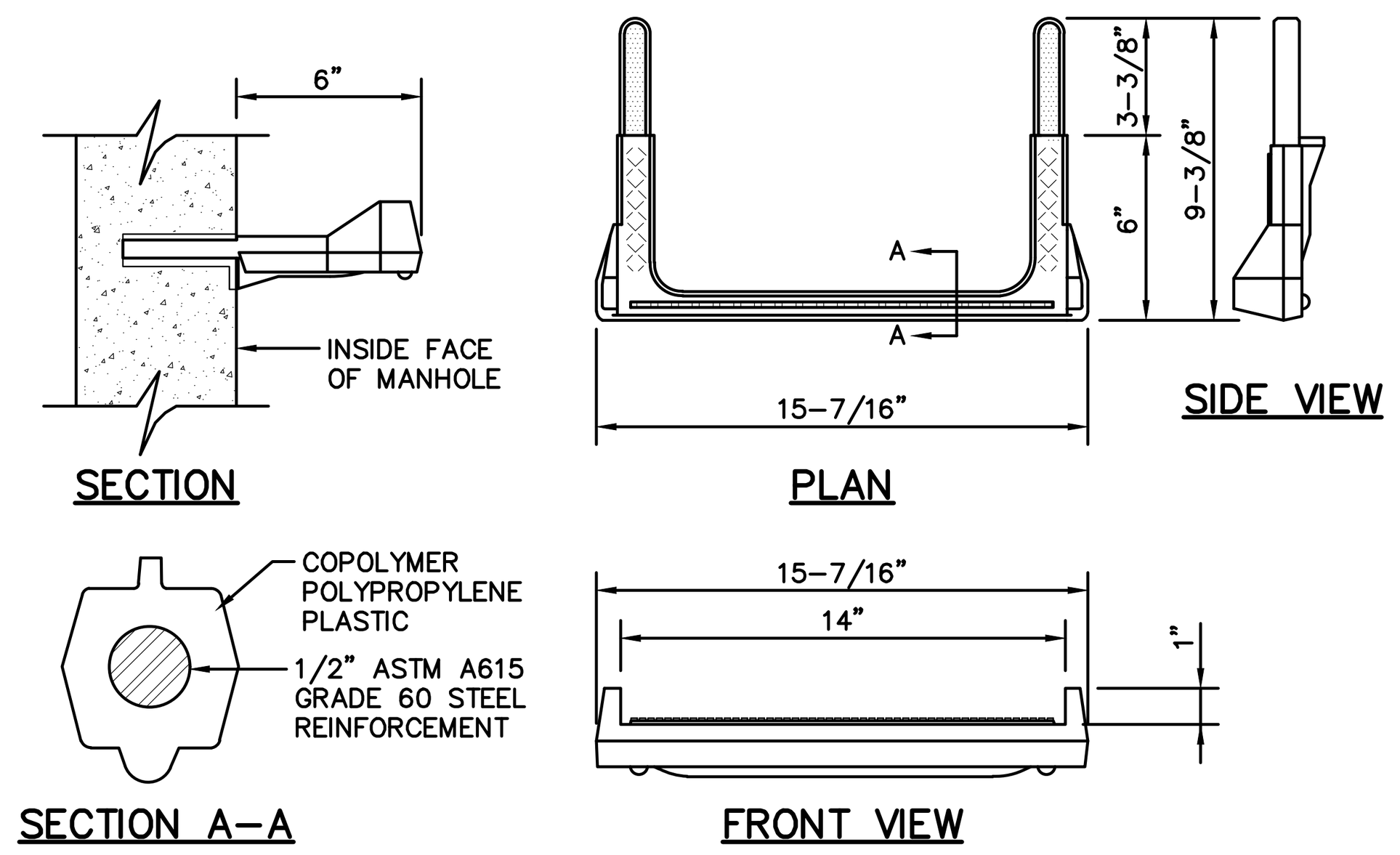

NOTES:
1. ATTACH INSERTS USING MANUFACTURER'S INSTRUCTIONS AND SPECIFICATIONS.
2. DRIVE STEP INTO INSERTS UNTIL BOTH LEGS ARE COMPLETELY SEATED.
3. STEP MEETS OR EXCEEDS ASTM C-478 AND OSHA STANDARDS WHEN PROPERLY INSTALLED.
4. ALL INLETS AND STORM MANHOLES OVER 4' IN DEPTH SHALL BE PROVIDED WITH STEPS FOR ACCESSIBILITY.

POLYPROPYLENE STEP DETAIL

NOT TO SCALE

STORM SEWER STRUCTURE NOTES

1. ALL STORM SEWER COMPONENTS SHALL BE CONSTRUCTED IN CONFORMANCE WITH CURRENT PENNDOT RC STANDARDS AND PUB. 408 SPECS (UNLESS WAIVED BY LEB. CO.).
2. PROVIDE STEPS WHEN DEPTH EXCEEDS 4'.
3. PROVIDE CONCRETE FLOW CHANNELS CAST-IN-PLACE IN BOTTOM OF INLETS AND MANHOLES (3,300 PSI).
4. PROVIDE ONE 2" DIAMETER WEEP HOLE ON EACH SIDE OF INLET NOT HAVING A PIPE AND AT ELEVATION OF SPRING LINE OF EXIT PIPE. PROVIDE GEOTEXTILE FABRIC ON EXTERIOR FACE OF WEEP HOLE OPENINGS.
5. GROUT ALL PIPE PENETRATIONS ON BOTH INTERIOR AND EXTERIOR OF INLET.

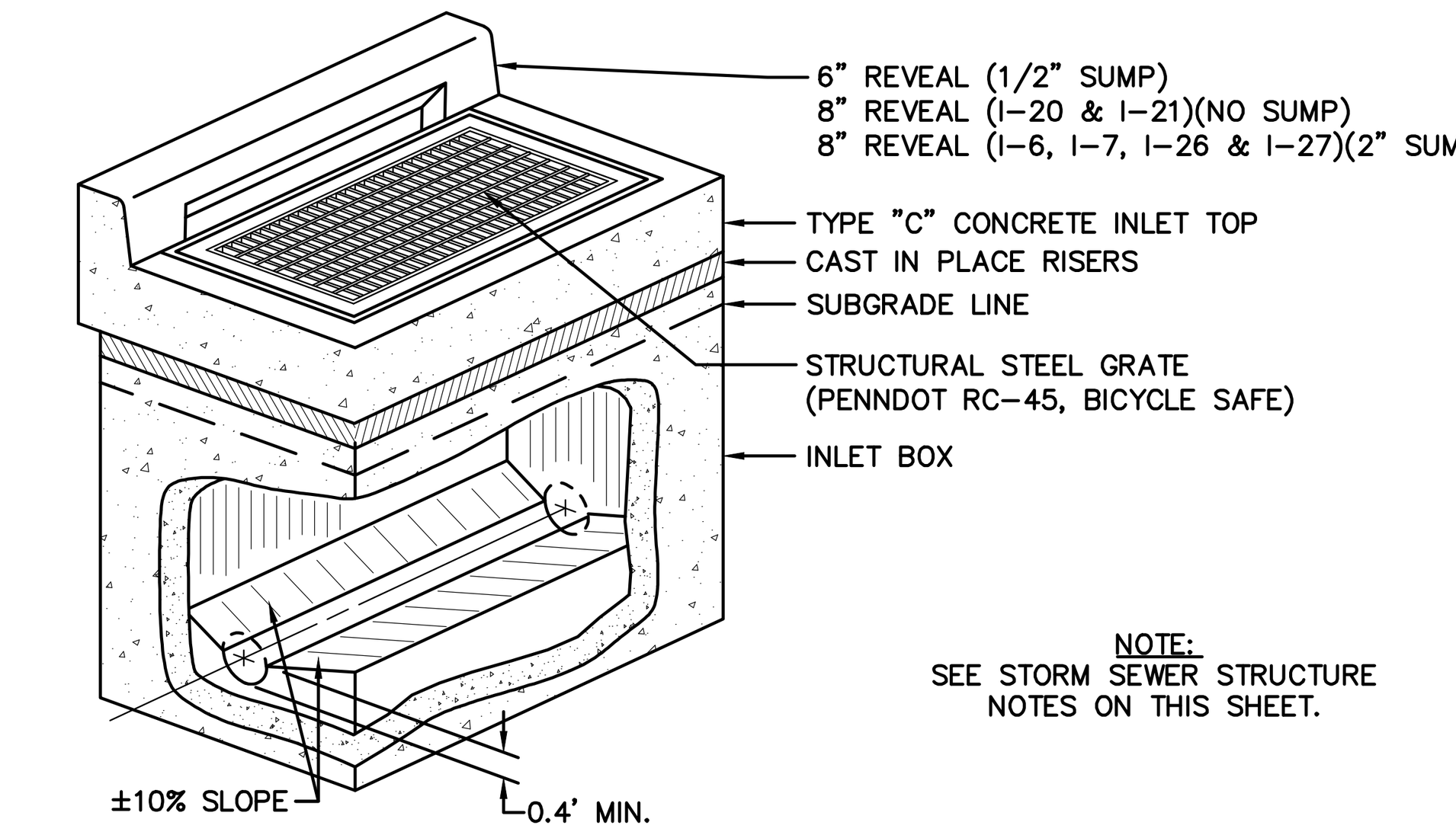

NOTE:
SEE STORM SEWER STRUCTURE NOTES ON THIS SHEET.

PENNDOT TYPE C INLET

NOT TO SCALE

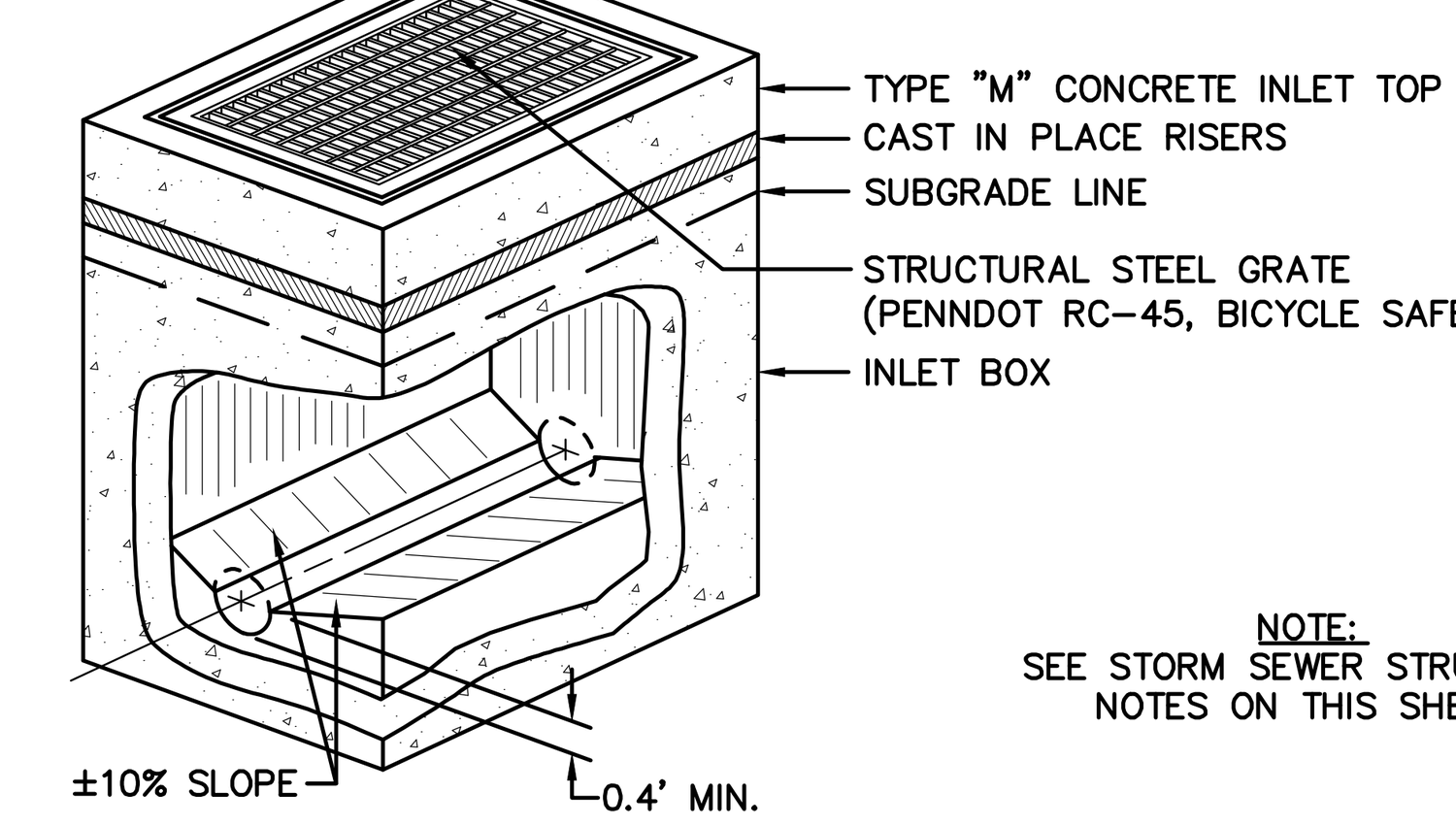

NOTE:
SEE STORM SEWER STRUCTURE NOTES ON THIS SHEET.

PENNDOT TYPE M INLET

NOT TO SCALE

PRE-CAST CONCRETE STORMWATER INLET NOTES

1. STORMWATER INLETS SHALL BE MANUFACTURED AS PER THE LATEST VERSION OF THE PENNDOT, SPECIFICATIONS, PUBLICATION 408, SECTION 714 & THE LATEST VERSION PENNDOT BUREAU OF HIGHWAY DESIGN, STANDARDS FOR ROADWAY CONSTRUCTION, RC-34.
2. GRADE ALL ADJUSTMENT RINGS SHALL BE CAST IN PLACE OR CONFORM TO CURRENT SPECIFICATIONS AS DETAILED IN PENNDOT PUBLICATION 72, RC-34M. THE ALTERNATE USE OF CAST IN PLACE ADJUSTMENT RINGS SHALL BE APPROVED BY THE TOWNSHIP ROAD FOREMAN.
3. BLENDCRETE NON-SHRINKING GROUT, OR EQUAL SHALL BE USED TO GROUT ALL PIPES PROTRUDING FROM STRUCTURE, GROUT TO BE PLACED INSIDE & OUTSIDE OF STRUCTURE.



NOTES:
1. SUGGESTED MANUFACTURER: "BERNTSEN" (www.berntsen.com/1-800-518-0934) OR APPROVED EQUAL.
2. MARKER SHALL BE ATTACHED TO THE FOLLOWING STRUCTURES (ATTACH WITH EPOXY IN ACCORDANCE WITH MANUFACTURER'S DIRECTIONS):
   - TYPE C INLETS (AFFIXED TO TOP OF CURB, FACING STREET)
   - TYPE M INLETS (AFFIXED TO TOP OF STRUCTURE ON ANY SIDE)
   - HEADWALLS (AFFIXED TO TOP OF STRUCTURE, CENTERED OVER OPENING)
3. SEE NOTES ON RIGHT-OF-WAY IMPROVEMENTS AND OTHER RELATED SPECIFICATIONS (FROM NLT RESOLUTION NO. 10-2017) - SECTION 115 ON SHEET 2.

INLET/HEADWALL MARKER

NOT TO SCALE

NO.	DATE	REVISION
3	12-21-21	REVISED PER N. LEB. TWP., LEB. CNTY. ENG. & THE REVISED WALL DESIGN
2	9-29-21	REVISED PER SEWER AUTH., N. LEB. TWP., LEB. CNTY. ENG. & THE REVISED WALL DESIGN
1	6-18-21	REVISED PER LCCD, DEP, SEWER AUTH., N. LEB. TWP., & LCPD

FOR PIONEER MANAGEMENT BY:
MANAGER: JAMES C. HENKE
SURV. CHIEF:
FIELDBOOK NO.
DESIGN BY: JDB/KWG
CHKD BY: JDB/JCH
DRAWN BY: JDB/MLS
CHKD BY: JCH
DRAWING REFERENCE: F:\18\18-2000-01\CAD\Final Plan\Details.dwg
XREFS: TB [F:\18\18-2000-01\CAD\Final Plan\X-Refs\TB.dwg]

CLIENT
MR. S. GERALD MUSSER
144 BELL ROAD
PALMYRA, PA 17078
(717) 821-1129

SCALE
AS NOTED

PIONEER
Management, LLC
111 Millersville Road, Lancaster, PA 17603
Phone (717) 481-5500 · Fax (717) 481-4955
Email: jh@pioneermanagementllc.com
Website: www.pioneermanagementllc.com

STORMWATER DETAILS
FOR THE
FINAL SUBDIVISION AND LAND DEVELOPMENT PLAN OF
MAPLEDALE ESTATES
NORTH LEBANON TOWNSHIP LEBANON COUNTY, PA

DATE: FEB. 25, 2021
SHEET NO. 31 OF 36
DWG. NO. 18-2000-01-B

F:\18\18-2000-01\CAD\Final Plan\Details.dwg, 32 STORMWATER DETAILS, 12/21/2021 1:52:01 PM, 1:1

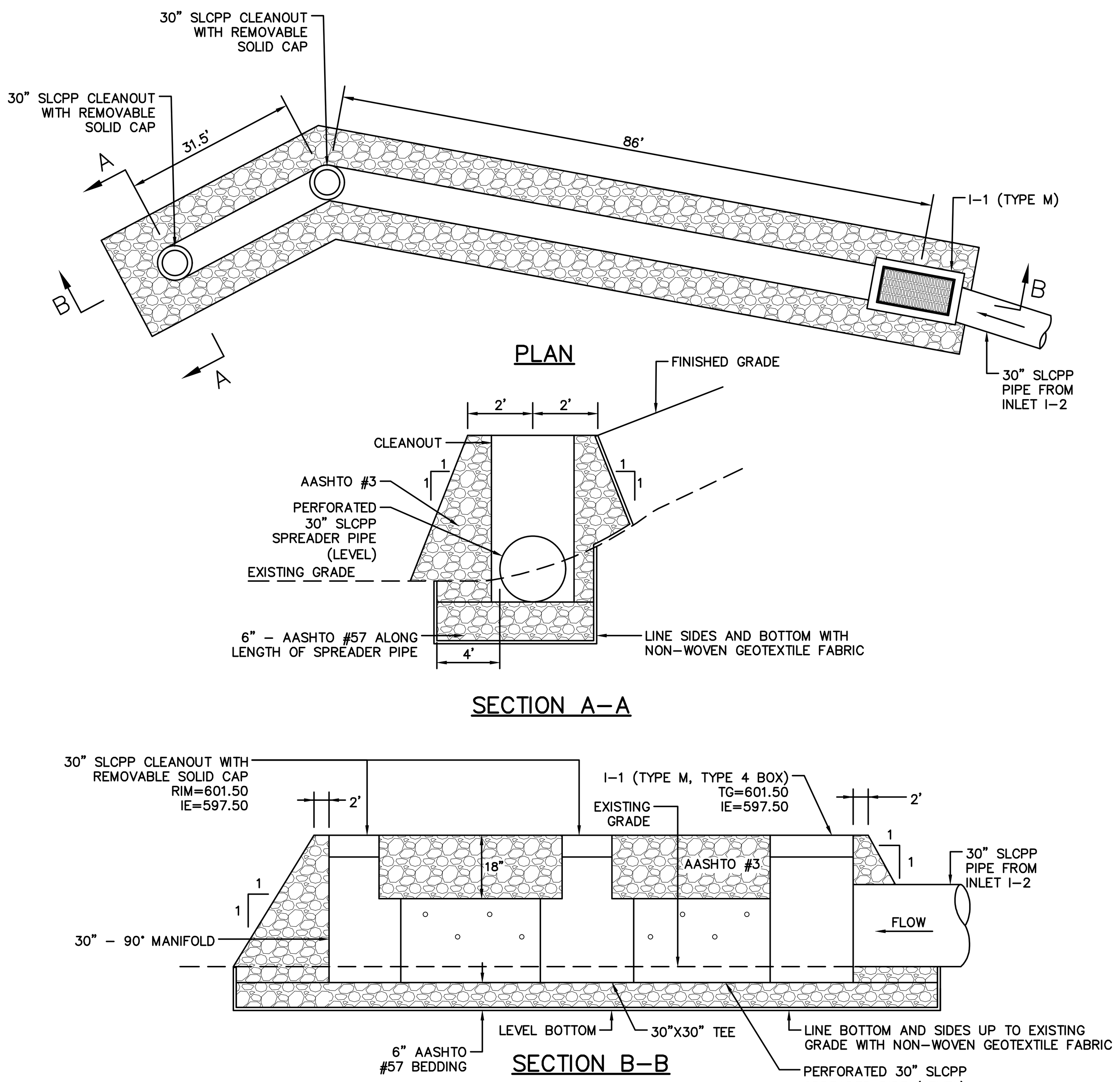

LEVEL SPREADER #1

NOT TO SCALE

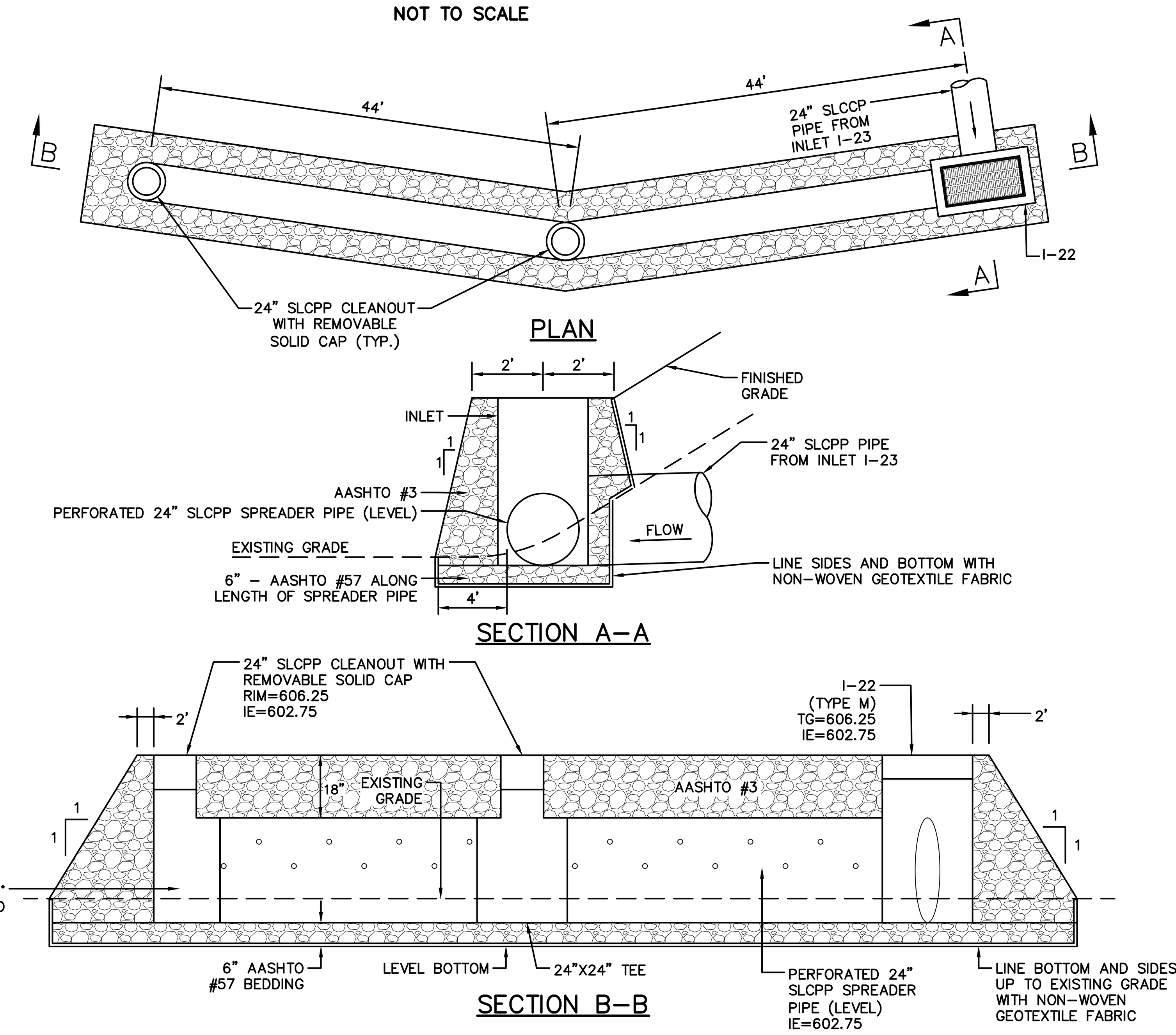

LEVEL SPREADER #2

NOT TO SCALE

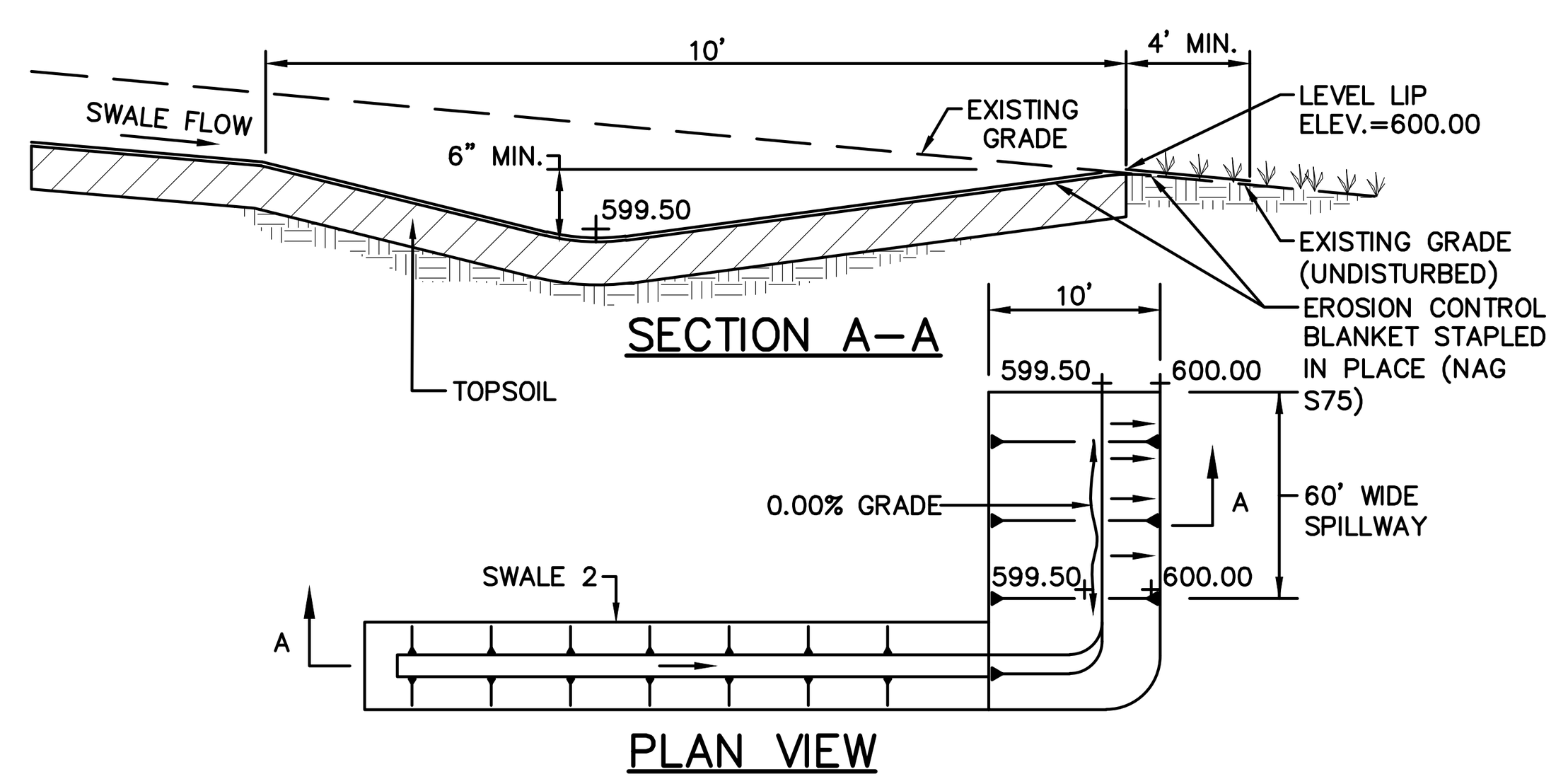

EARTHEN LEVEL SPREADER

NOT TO SCALE

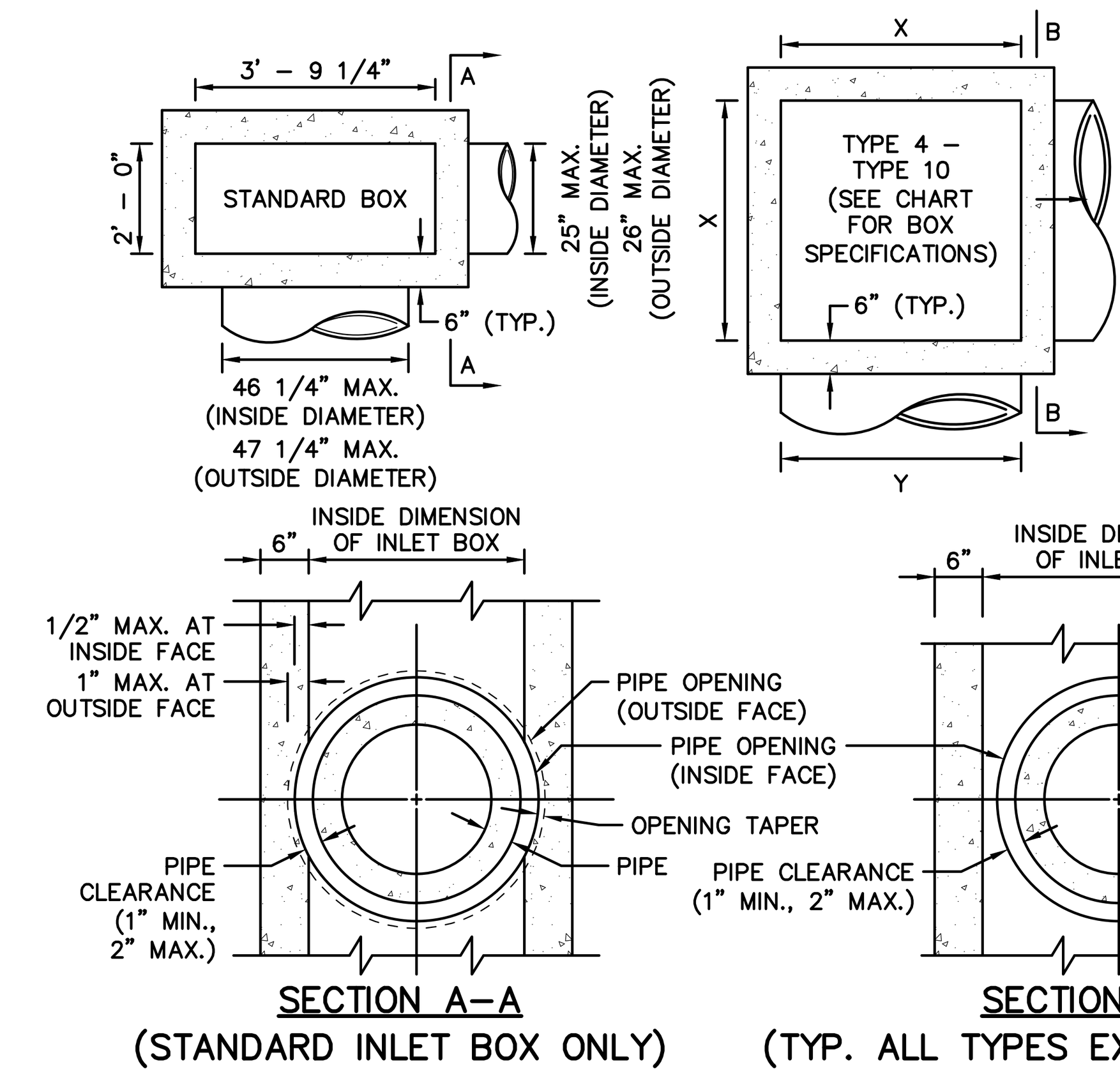

BOX TYPE	X	Y *
TYPE 4	4'	48"
TYPE 5	5'	60"
TYPE 6	6'	72"
TYPE 7	7'	84"
TYPE 8	8'	96"
TYPE 9	9'	108"
TYPE 10	10'	120"

*OUTSIDE PIPE DIAMETER

NOTES:
1. INLETS LOCATED WITHIN PUBLIC RIGHT-OF-WAYS SHALL BE CONSTRUCTED IN CONFORMANCE WITH CURRENT PENNDOT RC-46 STANDARDS AND PUB. 408 SPECIFICATIONS (UNLESS WAIVED BY LEB. CO.).
2. CONSTRUCT OR PLACE INLET BOXES LEVEL, UNLESS OTHERWISE INDICATED OR DIRECTED.
3. CONSTRUCT OR PLACE INLET BOXES ON A SUBBASE CONSTRUCTED OF COMPACTED #2A COARSE AGGREGATE. PLACE AND COMPACT IN 4" LAYERS TO PROVIDE A 1' MINIMUM DEPTH.
4. LOCATE PIPE OR PIPES AS INDICATED OR DIRECTED.
5. CONNECT PIPES TO INLET BOXES WITH MORTAR OR WATERTIGHT RUBBER FLEXIBLE CONNECTORS.
6. FORM BOTTOM OF INLET, USING CLASS A CEMENT CONCRETE, TO CHANNEL THE FLOW TOWARD THE OUTLET PIPE. PROVIDE #4 REINFORCEMENT BARS SPACED AT 12" CENTER TO CENTER MAXIMUM WHEN THE THICKNESS EXCEEDS 3".
7. BACKFILL EXCAVATED SPACES AROUND THE STRUCTURE WITH ACCEPTABLE EMBANKMENT MATERIAL.

PRECAST INLET BOX DETAIL (RC-46)

NOT TO SCALE

* SUITABLE MATERIAL = MATERIAL CONTAINING NO DEBRIS, ORGANIC MATTER, FROZEN MATERIAL OR LARGE STONES WITH A DIAMETER GREATER THAN ONE-HALF THE THICKNESS OF THE COMPACTED LAYERS BEING PLACED.

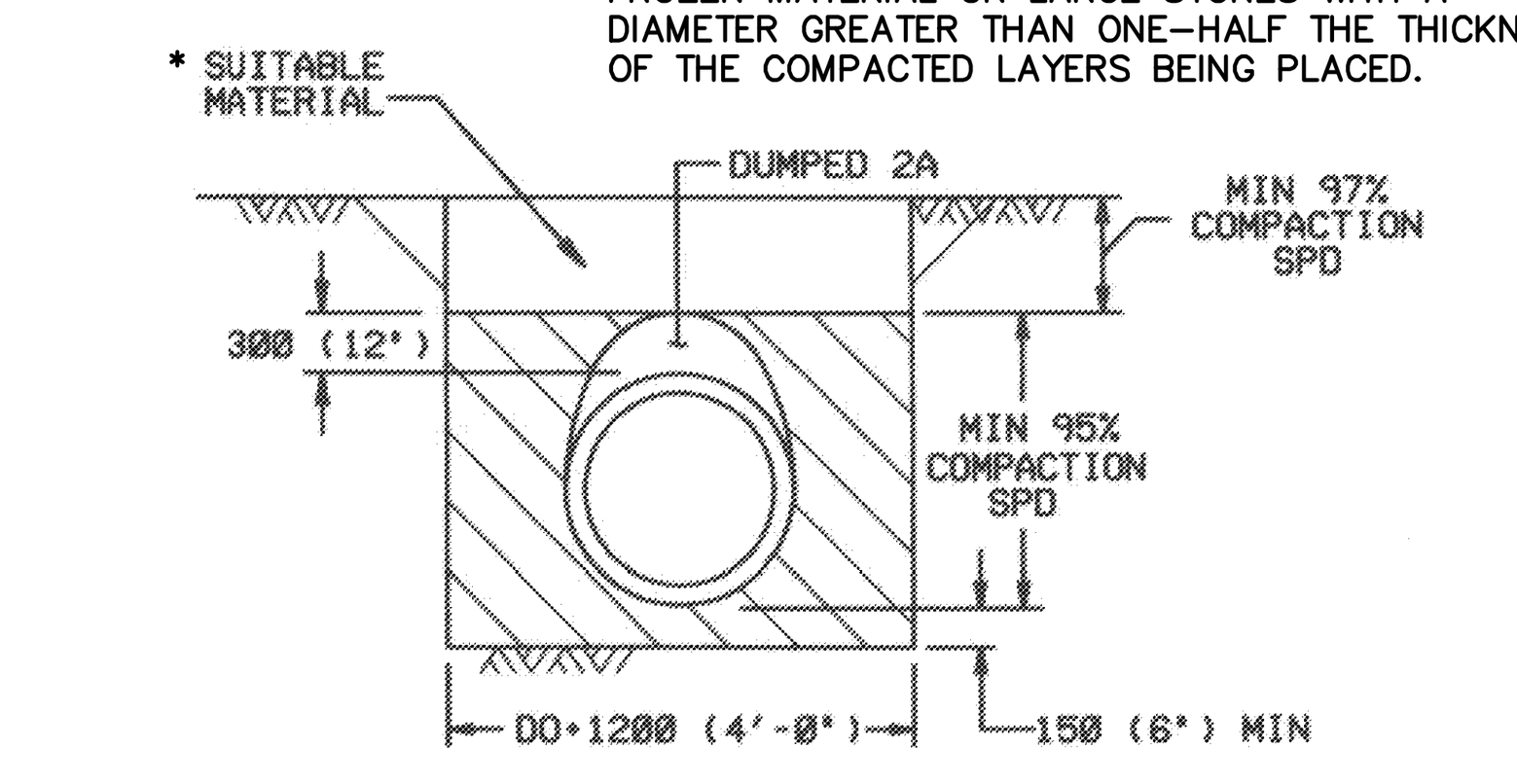

THERMOPLASTIC PIPE (RC-30M)

PLACE 2A COARSE AGGREGATE MATERIAL, IN LIFTS 100 (4") THICK, ADJACENT TO THE LOWER HAUNCHES TO A HEIGHT OF 300 (12") ABOVE TOP OF PIPE. COMPACT TO 95% SPD. TEST THE BACKFILL MATERIAL AND CONTINUE EMBANKMENT IN ACCORDANCE WITH PUBLICATION 408, SECTION 601.

TRENCH AND BACKFILL DETAIL FOR STORM PIPES

NOT TO SCALE

SOIL AMENDMENT CONSTRUCTION SPECIFICATIONS (BMP)

1. AMENDED SOIL SHALL CONSIST OF AT LEAST 20% ORGANIC COMPOST CONSISTING OF MUSHROOM SOIL OR COMPOST FROM A MUNICIPAL COMPOSTING FACILITY IF PRE-APPROVED BY NORTH LEBANON TOWNSHIP.
2. ALL ROUGH GRADING SHALL BE COMPLETED BEFORE AMENDING THE TOPSOIL.
3. BEFORE PLACING THE AMENDED SOIL, THE SUBSOIL SHALL BE IN A LOOSE, FRIABLE CONDITION TO A DEPTH OF 6 TO 12 INCHES BELOW SUBGRADE. THIS CAN BE ACHIEVED BY SCARIFYING OR RIPPING ALONG THE CONTOUR. DO NOT PERFORM THESE OPERATIONS WITHIN THE DRIPLINE OF ANY EXISTING TREES, WITHIN PREVIOUSLY STABILIZED SWALES, WHERE COMPACTION IS BY DESIGN, OR ON INACCESSIBLE SLOPES.
4. AMEND TOPSOIL BY MIXING COMPOST INTO STOCKPILED TOPSOIL. MIX AT A RATIO OF 20-30% COMPOST TO 70-80% TOPSOIL AND THEN SPREAD ONTO AREA, ALLOWING FOR SETTLEMENT. IMMEDIATELY STABILIZE WITH SEED AND MULCH.

NOTE:
SECTION 104 - PAVEMENT BASE DRAINS
1. PAVEMENT BASE DRAINS ARE SUBSURFACE DRAINS UTILIZING PERFORATED OR POROUS PIPE INSTALLED PARALLEL TO THE ROADWAY TO LOWER THE GROUNDWATER LEVEL, TO DRAIN SLOPES OR TO TO DRAIN THE PAVEMENT STRUCTURE. REFER TO THE LATEST VERSION OF THE COMMONWEALTH OF PENNSYLVANIA, PENNSYLVANIA DEPARTMENT OF TRANSPORTATION, BUREAU OF DESIGN, DESIGN MANUAL PART 2 - HIGHWAY DESIGN, PUBLICATION 13M, SECTION 2, CHAPTER 10.5 FOR THE DESIGN OF PAVEMENT BASE DRAINS. ALLOWABLE TYPES OF PIPES FOR BASE DRAINS ARE AS LISTED IN THE LATEST VERSION OF THE COMMONWEALTH OF PENNSYLVANIA, DEPARTMENT OF TRANSPORTATION SPECIFICATION, PUBLICATION 408, SECTION 610.2. PAVEMENT BASE DRAIN INSTALLATION SHALL BE COMPLETED ACCORDING TO THE LATEST VERSION OF THE COMMONWEALTH OF PENNSYLVANIA, DEPARTMENT OF TRANSPORTATION, BUREAU OF HIGHWAY DESIGN, STANDARDS FOR ROADWAY CONSTRUCTION, RC-30.

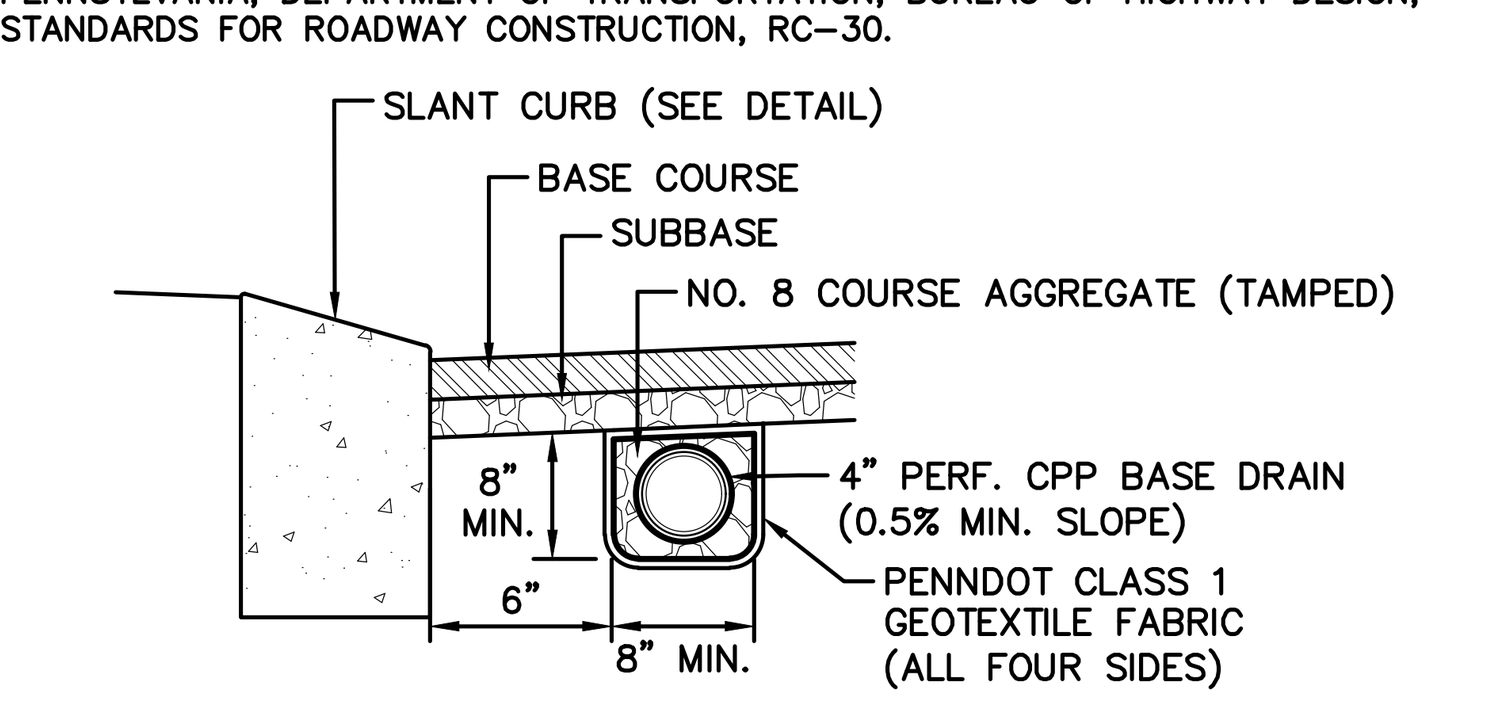

NOTE:
1. SEE PLAN FOR LOCATION OF BASE DRAIN.

PAVEMENT BASE DRAIN DETAIL

NOT TO SCALE

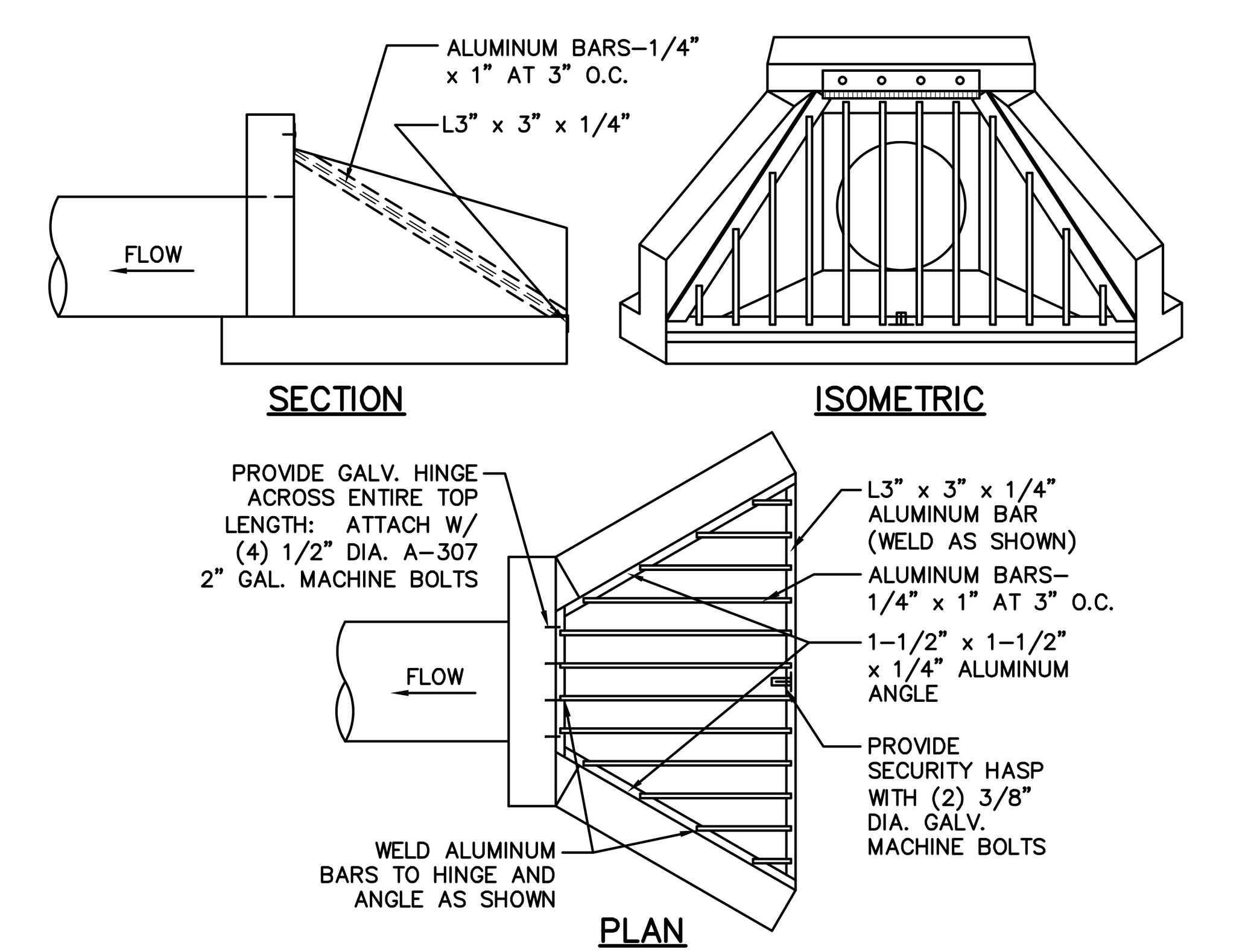

HEADWALL TRASH RACK

NOT TO SCALE

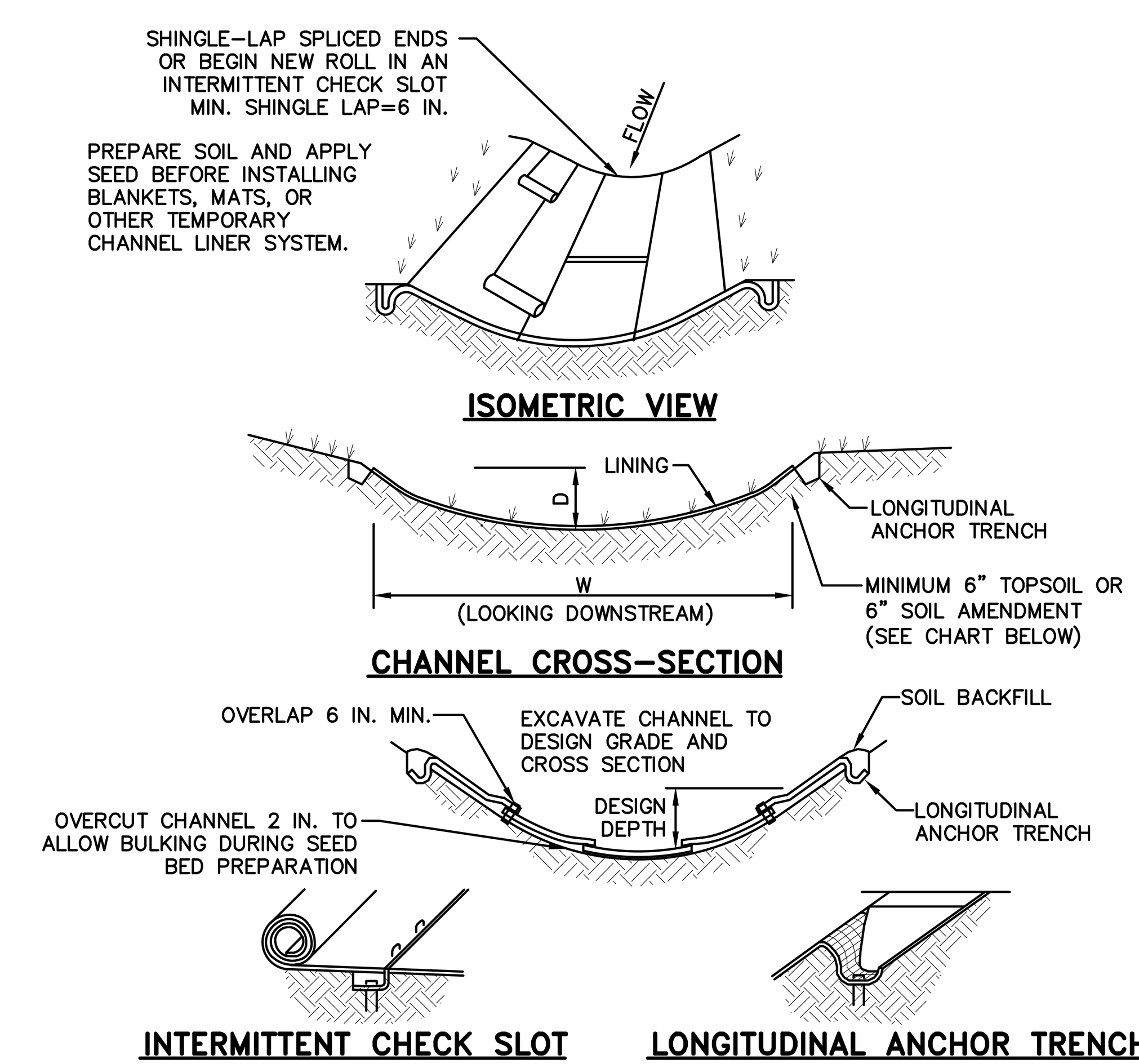

SEE MANUFACTURER'S LINING INSTALLATION DETAIL FOR STAPLE PATTERNS, VEGETATIVE STABILIZATION, SEED MIXTURES AND MULCHING INFORMATION

CHANNEL NO.	DEPTH D (FT)	WIDTH W (FT)	MIN. SLOPE	MAX. SLOPE	LINING	STAPLE PATTERN	6" SOIL AMEND.
2	1.25	12	1.0	2.0	NAG S75, 12' WIDE	D	NO
3	1.00	20	6.0	6.0	NAG P300, 8' WIDE	E	NO
11A	1.25	12	1.5	8.3	NAG S75, 8' WIDE	E	YES
11B	1.25	12	1.5	2.0	NAG S75, 8' WIDE	D	YES
19	1.00	12	1.5	2.5	NAG S75, 8' WIDE	D	YES
29	1.17	12	1.5	6.7	NAG S75, 8' WIDE	D	NO
33	1.07	12	2.5	2.5	NAG S75, 8' WIDE	D	NO
37	1.17	12	1.5	4.0	NAG S75, 8' WIDE	D	NO

NOTES:
1. ANCHOR TRENCHES SHALL BE INSTALLED AT BEGINNING AND END OF CHANNEL IN THE SAME MANNER AS LONGITUDINAL ANCHOR TRENCHES.
2. CHANNEL DIMENSIONS SHALL BE CONSTANTLY MAINTAINED. CHANNEL SHALL BE CLEANED WHENEVER TOTAL CHANNEL DEPTH IS REDUCED BY 25% AT ANY LOCATION.
3. SEDIMENT DEPOSITS SHALL BE REMOVED WITHIN 24 HOURS OF DISCOVERY OR AS SOON AS SOIL CONDITIONS PERMIT ACCESS TO CHANNEL WITHOUT FURTHER DAMAGE. DAMAGED LINING SHALL BE REPAIRED OR REPLACED WITHIN 48 HOURS OF DISCOVERY.
4. NO MORE THAN ONE THIRD OF THE SHOOT (GRASS LEAF) SHALL BE REMOVED IN ANY MOWING. GRASS HEIGHT SHALL BE MAINTAINED BETWEEN 2 AND 3 INCHES UNLESS OTHERWISE SPECIFIED. EXCESS VEGETATION SHALL BE REMOVED FROM PERMANENT CHANNELS TO ENSURE SUFFICIENT CHANNEL CAPACITY.

PARABOLIC VEGETATED CHANNEL

NOT TO SCALE

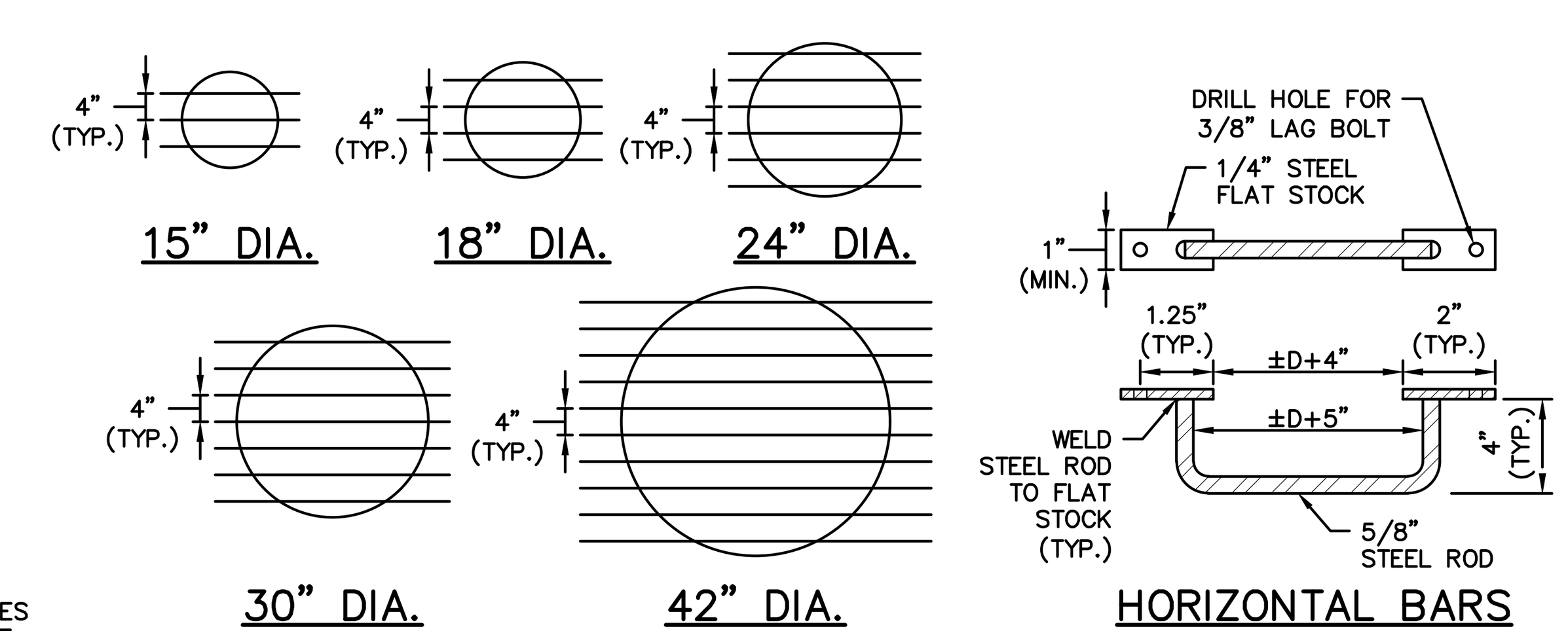

NOTE:
APPLY 2 COATS OF RUST-INHIBITIVE PAINT TO ALL TRASH RACK SURFACES

ENDWALL CHILDPROOF ENTRY BARS

NOT TO SCALE

NOTE:
CLAY DIKE SHALL CONSIST OF CLAY CONTAINING NO MORE THAN 15% (BY VOLUME) STONE NO LARGER THAN TWO (2) INCHES IN DIAMETER. CLAY SHALL BE PLACED IN SIX (6) INCH LIFTS AND COMPACTED BY A MECHANICAL TAMPER TO NOT LESS THAN 95% OF MAXIMUM DENSITY AT OPTIMUM MOISTURE CONTENT.

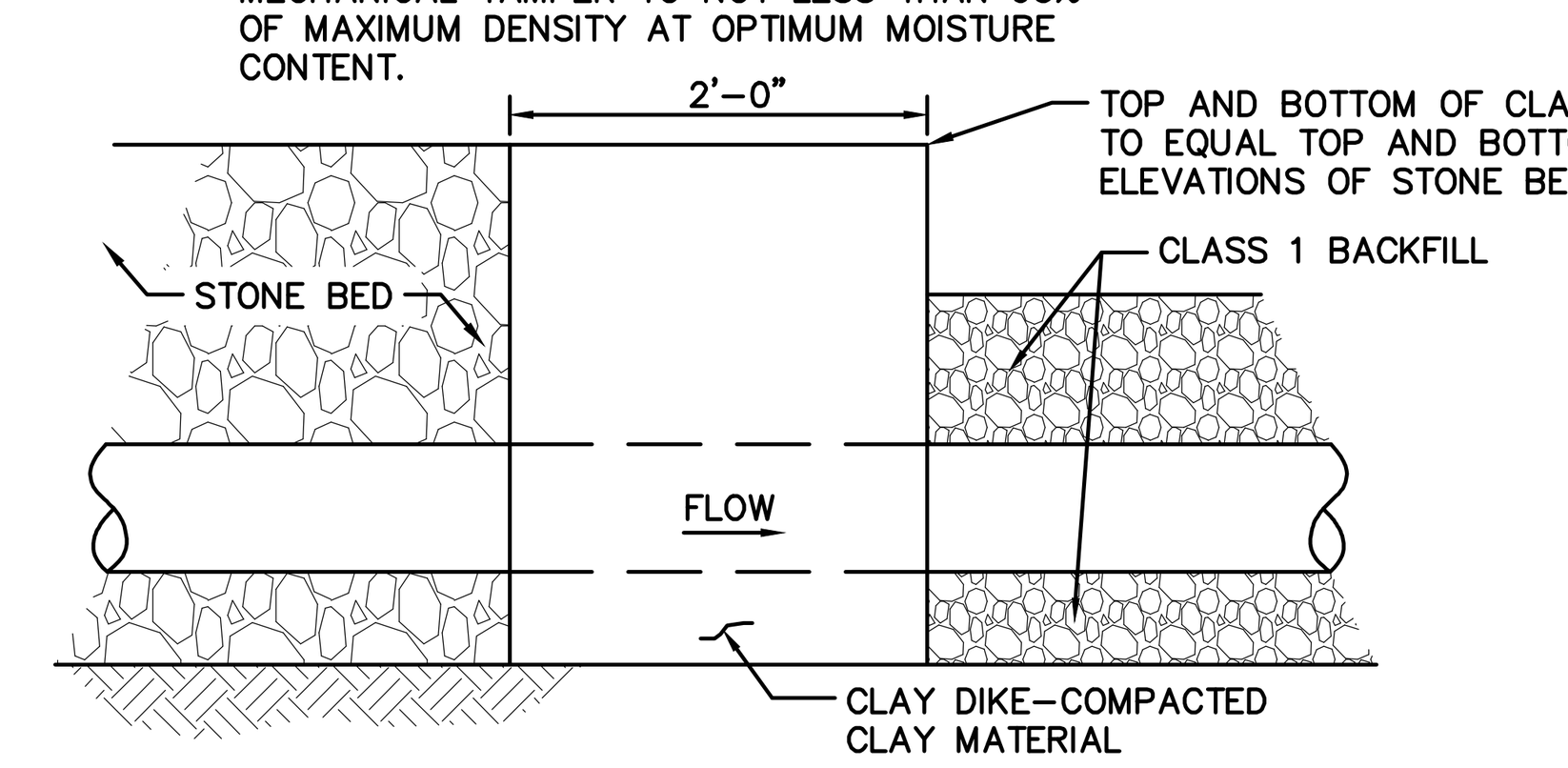

CLAY DIKE

NOT TO SCALE

NO.	DATE	REVISION
3	12-21-21	REVISED PER N. LEB. TWP., LEB. CNTY. ENG. & THE REVISED WALL DESIGN
2	9-29-21	REVISED PER SEWER AUTH., N. LEB. TWP., LEB. CNTY. ENG. & THE REVISED WALL DESIGN
1	6-18-21	REVISED PER LCCD, DEP, SEWER AUTH., N. LEB. TWP., & LCPD

FOR PIONEER MANAGEMENT BY:

MANAGER: JAMES C. HENKE | SURV. CHIEF: | FIELDBOOK NO.

DESIGN BY: JDB/KWG | CHKD BY: JDB/JCH | DRAWN BY: JDB/MLS | CHKD BY: JCH

DRAWING REFERENCE: F:\18\18-2000-01\CAD\Final Plan\Details.dwg

XREFS: TB [F:\18\18-2000-01\CAD\Final Plan\X-Refs\TB.dwg]

CLIENT

MR. S. GERALD MUSSER
144 BELL ROAD
PALMYRA, PA 17078
(717) 821-1129

SCALE: AS NOTED

PIONEER Management, LLC
111 Millersville Road, Lancaster, PA 17603
Phone (717) 481-5500 · Fax (717) 481-4955
Email: jh@pioneermanagementllc.com
Website: www.pioneermanagementllc.com

STORMWATER DETAILS

FOR THE FINAL SUBDIVISION AND LAND DEVELOPMENT PLAN OF

MAPLEDALE ESTATES

NORTH LEBANON TOWNSHIP LEBANON COUNTY, PA

DATE: FEB. 25, 2021

SHEET NO. 32 OF 36

DWG. NO. 18-2000-01-B

POST-CONSTRUCTION STORMWATER MANAGEMENT NOTES:

A. GENERAL GUIDELINES

1. A COPY OF THIS PLAN SHALL BE KEPT AVAILABLE FOR INSPECTION ON THE CONSTRUCTION SITE AT ALL TIMES THROUGH THE TERMS OF THE PROJECT.

2. THE INTENT OF THIS PLAN/NARRATIVE IS TO INDICATE GENERAL MEANS OF COMPLIANCE WITH THE REQUIREMENTS OF THE RULES AND REGULATIONS OF CHAPTER 102 OF THE PENNSYLVANIA CLEAN STREAMS LAW. IT SHALL BE THE RESPONSIBILITY OF THE CONTRACTOR TO IMPLEMENT THESE METHODS PLUS ADDITIONAL METHODS AS MAY BE NECESSARY BECAUSE OF THE CONDITIONS CREATED BY LOCALIZED SITE CONDITIONS AND/OR CONSTRUCTION PROCEDURES IN ORDER TO ASSURE COMPLIANCE WITH APPLICABLE LAW.

B. RECYCLING AND/OR DISPOSAL OF CONSTRUCTION WASTE:

1. THE CONTRACTOR MUST ENSURE THAT MECHANISMS ARE IN PLACE TO CONTROL WASTE MATERIALS FROM ALL CONSTRUCTION ACTIVES, INCLUDING WASTE MATERIALS ASSOCIATED WITH THE CONSTRUCTION OF ALL PCSM BMPs. CONSTRUCTION WASTES INCLUDE, BUT ARE NOT LIMITED TO, EXCESS SOIL MATERIALS, BUILDING MATERIALS, CONCRETE WASH WATER, SANITARY WASTES, ETC. THAT COULD ADVERSELY IMPACT WATER QUALITY. MEASURES SHOULD BE PLANNED AND IMPLEMENTED FOR HOUSEKEEPING, MATERIALS MANAGEMENT, AND LITTER CONTROL. RECYCLING OF EXCESS MATERIALS IS PREFERRED, RATHER THAN DISPOSAL. ALL RECYCLING AND DISPOSAL MUST BE IN ACCORDANCE WITH LOCAL AND STATE RULES FOR WASTE MANAGEMENT. THE OPERATOR SHALL REMOVE FROM THE SITE, RECYCLE, OR DISPOSE OF ALL BUILDING MATERIALS AND WASTES IN ACCORDANCE WITH THE DEPARTMENT'S SOLID WASTE MANAGEMENT REGULATIONS AT 25 PA. CODE 260.1 et seq., 271.1 et seq., AND 287.1 et seq. THE CONTRACTOR SHALL NOT ILLEGALLY BURY, DUMP, OR DISCHARGE ANY BUILDINGS MATERIALS OR WASTES.

C. RESTORATION OF PLANTING AREAS

1. FINAL RESTORATION SHALL BE PERFORMED NO LATER THAN THE START OF THE NEXT PLANTING SEASON FOLLOWING CONSTRUCTION. THE PLANTING SEASON SHALL BE AS ESTABLISHED BY THE U.S. AGRICULTURAL SERVICE FOR THE AREA OF CONSTRUCTION.

2. TOPSOIL SHALL BE FREE FROM SUBSOIL, BRUSH, WEEDS, OR OTHER LITTER, CLAY LUMPS AND STONES, BUT MAY CONTAIN DECAYING VEGETABLE MATTER AS IS PRESENT IN GOOD TOPSOIL.

3. PRECAUTIONS SHALL BE EXERCISED AS NECESSARY TO CONFORM WITH LAWS RELATING TO EROSION AND SEDIMENT CONTROL.

4. SEED SHALL BE NOT MORE THAN TWO (2) YEARS OLD. GERMINATION TESTS OF SEEDS SHALL BE MADE NOT MORE THAN SIX (6) MONTHS PRIOR TO SEEDING. SEED WHICH HAS BECOME WET, MOLDY, OR OTHERWISE DAMAGED SHALL NOT BE USED.

5. THE CONTRACTOR SHALL BE RESPONSIBLE TO PRODUCE A STAND OF GRASS IN ALL SEEDED OR SODDED AREAS. EROSION, DROUGHT, OR ANY OTHER CONDITION ENCOUNTERED SHALL NOT RELIEVE THE CONTRACTOR OF THIS REQUIREMENT.

D. CLEAN FILL AND ENVIRONMENTAL DUE DILIGENCE REQUIREMENTS

1. CLEAN FILL IS DEFINED AS: UNCONTAMINATED, NON-WATER SOLUBLE, NON-DECOMPOSABLE, INERT, SOLID MATERIAL. THE TERM INCLUDES SOIL, ROCK, STONE, DREDGED MATERIAL, USED ASPHALT AND BRICK, BLOCK OR CONCRETE FROM CONSTRUCTION AND DEMOLITION ACTIVITIES THAT IS SEPARATE FROM OTHER WASTE AND IS RECOGNIZABLE AS SUCH. THE TERM DOES NOT INCLUDE MATERIALS PLACED IN OR ON THE WATERS OF THE COMMONWEALTH UNLESS OTHERWISE AUTHORIZED. (THE TERM "USED ASPHALT" DOES NOT INCLUDE MILLED ASPHALT OR ASPHALT THAT HAS BEEN PROCESSED FOR RE-USE.)

2. ANY PLACEMENT OF CLEAN FILL THAT HAS BEEN AFFECTED BY A SPILL OR RELEASE OF A REGULATED SUBSTANCE MUST USE FORM FP-001 TO CERTIFY THE ORIGIN OF THE FILL MATERIAL AND THE RESULTS OF THE ANALYTICAL TESTING TO QUALIFY THE MATERIAL AS CLEAN FILL. FORM FP-001 MUST BE RETAINED BY THE OWNER OF THE PROPERTY RECEIVING THE FILL.

3. ENVIRONMENTAL DUE DILIGENCE MUST BE PERFORMED TO DETERMINE IF THE FILL MATERIALS ASSOCIATED WITH THE PROJECT QUALIFY AS CLEAN FILL. ENVIRONMENTAL DUE DILIGENCE IS DEFINED AS: INVESTIGATIVE TECHNIQUES, INCLUDING, BUT NOT LIMITED TO, VISUAL PROPERTY INSPECTIONS, ELECTRONIC DATA BASE SEARCHES, REVIEW OF PROPERTY OWNERSHIP, REVIEW OF PROPERTY USE HISTORY, SANBORN MAPS, ENVIRONMENTAL QUESTIONNAIRES, TRANSACTION SCREENS, ANALYTICAL TESTING, ENVIRONMENTAL ASSESSMENTS OR AUDITS. ANALYTICAL TESTING IS NOT A REQUIRED PART OF DUE DILIGENCE UNLESS VISUAL INSPECTION AND/OR REVIEW OF THE PAST LAND USE OF THE PROPERTY INDICATES THAT THE FILL MAY HAVE BEEN SUBJECTED TO A SPILL OR RELEASE OF A REGULATED SUBSTANCE. IF THE FILL MAY HAVE BEEN AFFECTED BY A SPILL OR RELEASE OF A REGULATED SUBSTANCE, IT MUST BE TESTED TO DETERMINE IF IT QUALIFIES AS CLEAN FILL. TESTING SHOULD BE PERFORMED IN ACCORDANCE WITH APPENDIX A OF THE DEPARTMENT'S POLICY "MANAGEMENT OF CLEAN FILL."

E. STABILIZATION PROCEDURES

1. STOCKPILE HEIGHTS MUST NOT EXCEED 35 FEET. STOCKPILE SLOPES MUST BE 2H:1V OR FLATTER.

2. TOPSOIL SHOULD NOT BE PLACED WHILE THE TOPSOIL OR SUBSOIL IS IN A FROZEN OR MUDDY CONDITION, WHEN THE SUBSOIL IS EXCESSIVELY WET, OR IN A CONDITION THAT MAY OTHERWSE BE DETRIMENTAL TO PROPER GRADING AND SEEDBED PREPARATION. COMPACTED SOILS SHOULD BE SCARIFIED 6 TO 12 INCHES ALONG CONTOUR WHEREVER POSSIBLE PRIOR TO SEEDING.

3. AREAS WHICH ARE TO BE TOPSOILED SHALL BE SCARIFIED TO A MINIMUM DEPTH OF 3-5 INCHES PRIOR TO PLACEMENT OF TOPSOIL. AREAS TO BE VEGETATED SHALL HAVE A MINIMUM 6 INCHES OF TOPSOIL IN PLACE PRIOR TO SEEDING AND MULCHING. FILL 3:1 OR GREATER SHALL HAVE A MINIMUM OF 2 INCHES OF TOPSOIL.

4. UPON TEMPORARY CESSATION OF AN EARTH DISTURBANCE OR ANY STAGE OR PHASE OF AN ACTIVITY WHERE A CESSATION OF EARTH DISTURBANCE ACTIVITIES EXCEED 4 DAYS, THE SITE SHALL BE IMMEDIATELY SEEDED, MULCHED OR OTHERWISE PROTECTED FROM ACCELERATED EROSION AND SEDIMENTATION PENDING FUTURE EARTH DISTURBANCE ACTIVITIES.

5. MULCH OF LONG STEM STRAW SHALL BE APPLIED AT EVEN APPLICATION OF 3 TONS PER ACRE, WITH A SURFACE COVERAGE OF 80-90%. STRAW MULCH SHOULD BE ANCHORED IMMEDIATELY AFTER APPLICATION TO PREVENT BEING WINDBLOWN.

6. ALL GRADED AREAS SHALL BE PERMANENTLY STABILIZED IMMEDIATELY UPON REACHING FINISHED GRADE. CUT SLOPES IN COMPETENT BEDROCK AND ROCK FILLS NEED NOT BE VEGETATED.

7. EROSION CONTROL BLANKETING (SPAY-ON TYPE RECOMMENDED) SHALL BE INSTALLED ON ALL SLOPES 3H:1V OR STEEPER, WITHIN 50 FEET OF A SURFACE WATER AND ON ALL OTHER DISTURBED AREAS SPECIFIED ON THE PLAN MAPS AND/OR DETAIL SHEETS.

8. IMMEDIATELY AFTER EARTH DISTURBANCE ACTIVITIES CEASE IN ANY AREA OR SUBAREA OF THE PROJECT, THE OPERATOR SHALL STABILIZE ALL DISTURBED AREAS. DURING NON-GERMINATING MONTHS, MULCH OR PROTECTIVE BLANKETING SHALL BE APPLIED AS DESCRIBED IN THE PLAN. AREAS NOT AT FINISHED GRADE, WHICH WILL BE REACTIVATED WITHIN 1 YEAR, MAY BE STABILIZED IN ACCORDANCE WITH THE TEMPORARY STABILIZATION SPECIFICATIONS. THOSE AREAS WHICH WILL NOT BE REACTIVATED WITHIN 1 YEAR SHALL BE STABILIZED IN ACCORDANCE WITH THE PERMANENT STABILIZATION SPECIFICATIONS.

9. PERMANENT STABILIZATION IS DEFINED AS A MINIMUM UNIFORM, PERENNIAL 70% VEGETATIVE COVER OR OTHER PERMANENT NON-VEGETATIVE COVER OVER THE ENTIRE DISTURBED AREA WITH A DENSITY SUFFICIENT TO RESIST ACCELERATED EROSION. CUT AND FILL SLOPES SHALL BE CAPABLE OF RESISTING FAILURE DUE TO SLUMPING, SLIDING, OR OTHER MOVEMENTS.

10. SURFACE ROUGHENING SHALL BE APPLIED TO ALL CUT AND FILL SLOPES 3:1 OR STEEPER UNLESS A STABLE ROCK FACE EXISTS OR IT CAN BE SHOWN THAT THERE IS NOT A POTENTIAL FOR SEDIMENT POLLUTION TO SURFACE WATERS. FOR ROUGHENED SURFACES WHERE BLANKETING OF SEEDED AREAS IS PROPOSED, SPAY-ON TYPE BLANKETS (SUCH AS COMPOSTING OR A FLEXIBLE GROWTH MEDIUM) ARE RECOMMENDED. SURFACE ROUGHENING MAY BE DONE BY RUNNING TRACKED MACHINERY UP AND DOWN THE SLOPE, LEAVING TREAD MARKS PARALLEL TO CONTOUR.

11. AS DISTURBED AREAS WITHIN A PROJECT APPROACH FINAL GRADE, PREPARATIONS SHOULD BE MADE FOR SEEDING AND MULCHING TO BEGIN (I.E. ANTICIPATE THE COMPLETION DATE AND SCHEDULE THE SEEDER). IN NO CASE SHOULD AN AREA EXCEEDING 15,000 SQUARE FEET, WHICH IS TO BE STABILIZED BY VEGETATION, REACH FINAL GRADE WITHOUT BEING SEEDED AND MULCHED. WAITING UNTIL EARTHMOVING IS COMPLETED BEFORE MAKING PREPARATIONS FOR SEEDING AND MULCHING IS NOT ACCEPTABLE.

F. PCSM REQUIREMENTS

1. A LICENSED PROFESSIONAL OR A DESIGNEE SHALL BE PRESENT ONSITE AND BE RESPONSIBLE DURING CRITICAL STAGES OF IMPLEMENTATION OF THE APPROVED PCSM PLAN. THESE CRITICAL STAGES ARE IDENTIFIED IN THE CONSTRUCTION SEQUENCE.

2. THE PCSM PLAN, INSPECTION REPORTS, AND MONITORING RECORDS SHALL BE AVAILABLE FOR REVIEW AND INSPECTION BY THE DEPARTMENT OR THE CONSERVATION DISTRICT.

G. PCSM LONG TERM OPERATIONS AND MAINTENANCE REQUIREMENTS

1. THE PERMITTEE OR CO-PERMITTEE SHALL BE RESPONSIBLE FOR LONG-TERM OPERATION AND MAINTENANCE OF PCSM BMPS UNLESS A DIFFERENT PERSON IS IDENTIFIED IN THE NOTICE OF TERMINATION AND HAS AGREED TO LONG-TERM OPERATION AND MAINTENANCE OF PCSM BMPS.

2. A PERMITTEE OR CO-PERMITTEE THAT FAILS TO TRANSFER LONG-TERM OPERATION AND MAINTENANCE OF THE PCSM BMP OR OTHERWISE FAILS TO COMPLY WITH THIS REQUIREMENT SHALL REMAIN JOINTLY AND SEVERALLY RESPONSIBLE WITH THE LANDOWNER FOR LONG-TERM OPERATION AND MAINTENANCE OF THE PCSM BMPS LOCATED ON THE PROPERTY.

H. PERMIT TERMINATION

1. WITHIN 30 DAYS OF PERMANENT STABILIZATION OF THE EARTH DISTURBANCE ACTIVITY AND INSTALLATION OF BMPS IN ACCORDANCE WITH AN APPROVED PLAN, THE PERMITTEE OR CO-PERMITTEE SHALL SUBMIT A NOTICE OF TERMINATION TO THE DEPARTMENT OR CONSERVATION DISTRICT. THE NOTICE OF TERMINATION MUST INCLUDE:

   a. THE FACILITY NAME, ADDRESS AND LOCATION.
   b. THE OPERATOR NAME AND ADDRESS.
   c. THE NPDES PERMIT NUMBER.
   d. THE REASON FOR PERMIT TERMINATION.
   e. IDENTIFICATION OF THE PERSONS WHO HAVE AGREED TO AND WILL BE RESPONSIBLE FOR LONG-TERM OPERATION AND MAINTENANCE OF THE PCSM.
   f. COPY OF LEGAL INSTRUMENT: FOR ANY PROPERTY CONTAINING A PCSM BMP, THE PERMITTEE OR CO-PERMITTEE SHALL RECORD AN INSTRUMENT WITH THE RECORDER OF DEEDS WHICH WILL ASSURE DISCLOSURE OF THE PCSM BMP AND THE RELATED OBLIGATIONS IN THE ORDINARY COURSE OF A TITLE SEARCH OF THE SUBJECT PROPERTY. THE RECORDED INSTRUMENT MUST IDENTIFY THE PCSM BMP, PROVIDE FOR NECESSARY ACCESS RELATED TO LONG-TERM OPERATION AND MAINTENANCE FOR PCSM BMPS AND PROVIDE NOTICE THAT THE RESPONSIBILITY FOR LONG-TERM OPERATION AND MAINTENANCE OF THE PCSM BMP IS A COVENANT THAT RUNS WITH THE LAND THAT IS BINDING UPON AND ENFORCEABLE BY SUBSEQUENT GRANTEES, AND PROVIDE PROOF OF FILING WITH THE NOTICE OF TERMINATION.
   g. FINAL CERTIFICATION: THE PERMITTEE SHALL INCLUDE WITH THE NOTICE OF TERMINATION "RECORD DRAWINGS" WITH A FINAL CERTIFICATION STATEMENT FROM A LICENSED PROFESSIONAL, WHICH READS AS FOLLOWS:

      "I (NAME) DO HEREBY CERTIFY PURSUANT TO THE PENALTIES OF 18 PA. C.S.A. §4904 TO THE BEST OF MY KNOWLEDGE, INFORMATION AND BELIEF, THAT THE ACCOMPANYING RECORD DRAWINGS ACCURATELY REFLECT THE AS-BUILT CONDITIONS, ARE TRUE AND CORRECT, AND ARE IN CONFORMANCE WITH CHAPTER 102 OF THE RULES AND REGULATIONS OF THE DEPARTMENT OF ENVIRONMENTAL PROTECTION AND THAT THE PROJECT SITE WAS CONSTRUCTED IN ACCORDANCE WITH THE APPROVED PCSM PLAN, ALL APPROVED PLAN CHANGES AND ACCEPTED CONSTRUCTION PRACTICES."
   h. THE PERMITTEE SHALL RETAIN A COPY OF THE RECORD DRAWINGS AS A PART OF THE APPROVED PCSM PLAN.
   i. THE PERMITTEE SHALL PROVIDE A COPY OF THE RECORD DRAWINGS AS PART OF THE APPROVED PCSM PLAN TO THE PERSON IDENTIFIED IN THIS SECTION AS BEING RESPONSIBLE FOR THE LONG TERM OPERATION AND MAINTENANCE OF THE PCSM BMPS.

SEEDING NOTES: TEMPORARY

MULCH – CLEAN OAT OR WHEAT STRAW SHALL BE FREE FROM MATURE SEED– BEARING STALKS OR ROOTS OF PROHIBITED OR NOXIOUS WEEDS AS DEFINED BY THE PENNSYLVANIA SEED ACT 1947. APPLY AT A RATE 3 TONS PER ACRE. PRECAUTIONS SHALL BE TAKEN TO STABILIZE THE MULCH UNTIL THE VEGETATIVE COVER IS ESTABLISHED.

SEED MIXTURE SHALL BEAR A GUARANTEED STATEMENT OF ANALYSIS AND SHALL BE COMPOSED OF THE VARIETIES FOLLOWING AND MIXED IN THE OF PROPORTIONS SPECIFIED.

TEMPORARY SEED MIXTURE	PROPORTION BY WEIGHT	MINIMUM PURITY	MINIMUM GERMINATION
Kentucky 31 Tall Fescue	75%	95%	80%
Ryegrass or Red Fescue	25%	95%	80%

THREE PERCENT REDTOP MAY BE ADDED TO THE LAWN MIXTURE ON SLOPE AREAS OR FOR LATE SPRING OR LATE FALL SEEDING.

TEMPORARY SEEDING SHALL BE APPLIED AT THE RATE OF ONE (1) POUND PER THOUSAND (1,000) SQUARE FEET.

ALL AREAS TO BE SEEDED SHALL BE LOOSENED TO A DEPTH OF AT LEAST TWO INCHES BY MECHANICAL MEANS.

MULCH SEEDED AREAS IMMEDIATELY AFTER SEEDING.

LIMESTONE AND FERTILIZER SHALL BE APPLIED UNIFORMLY TO AREAS TO BE SEEDED, AND WORKED INTO THE SOIL TO A DEPTH OF 2".
Limestone – pulv. Aq.
Limestone – 50 lbs./1000 s.f.
Fertilizer – 10-20-20
Fertilizer – 10 lbs./1000 s.f.

SEEDING – SEED ALL DISTURBED AREAS WITH THE TEMPORARY SEED MIXTURE. SEEDING SHALL OCCUR BETWEEN MARCH 15 – JUNE 15 OR AUGUST 15 – OCTOBER 15, UNLESS OTHERWISE DIRECTED BY THE ENGINEER.

SEEDING NOTES: PERMANENT

ALL TOPSOIL SHALL BE LOOSENED TO A DEPTH OF AT LEAST 4". ALL OBJECTIONABLE MATERIAL LARGER THAN 2" SHALL BE REMOVED.

LIMESTONE AND FERTILIZER SHALL BE APPLIED UNIFORMLY TO AREAS TO BE SEEDED, AND WORKED INTO THE SOIL TO A DEPTH OF 2".

LIMESTONE – PULV. AG.
LIMESTONE – 50 LBS./1000 S.F.
FERTILIZER – 10-20-20 ANALYSIS COMM.
FERTILIZER – 10 LBS./1000 S.F.

SEED MIXTURE
OVERTIME TALL FESCUE MIX
FORMULATION:
34% COCHISE III TURF TYPE TALL FESCUE
33% CORTEZ II TURF TYPE TALL FESCUE
33% EXPEDITION TURF TYPE TALL FESCUE

SEEDING RATES:
NEW LAWNS: 7-10 LBS. PER 1,000 S.F.
OVERSEEDING: 3½-5 LBS. PER 1,000 S.F.

METHOD OF SEEDING:
BROADCAST SEED FOLLOWED BY LIGHTLY ROLLING OR PACKING SEED. SEED TO SOIL CONTACT IS VITAL TO HAVING A SUCCESSFUL STAND. SEED SHOULD BE PLANTED NO MORE THAN ¼ INCH DEEP. OVERSEEDING CAN BE DONE WITH A SLIT SEEDER.

SOIL RESOLUTIONS

PRIOR TO COMMENCEMENT OF EARTHWORK, RANDOM SOIL TESTING SHOULD BE COMPLETED THROUGHOUT THE SITE. FROM THESE TESTS, IT SHOULD BE DETERMINED WHETHER OR NOT THE SOIL WARRANTS AMENDMENTS OR OTHER RESOLUTIONS AS DESCRIBED BELOW.

CUTBANKS CAVE – BERKS, COMLY AND WEIKERT SOILS. IT IS IMPERATIVE THAT PRECAUTIONS BE TAKEN TO SAFEGUARD WORKERS DURING TRENCHING AND EXCAVATION OPERATIONS WITHIN THESE SOILS. ALL APPLICABLE OSHA STANDARDS AND REGULATIONS MUST BE IMPLEMENTED AT ALL TIMES.

CORROSIVE TO STEEL – BERKS, COMLY AND WEIKERT SOILS ARE CORROSIVE TO STEEL AND CONCRETE. PLASTIC PIPE WILL BE USED WHERE POSSIBLE IN THE STORM SEWER SYSTEMS.

EASILY ERODIBLE – BERKS AND COMLY SOILS ARE CONSIDERED EASILY ERODIBLE. THE USE OF EROSION CONTROL BLANKETS OR MULCHES ON SLOPES 3:1 OR GREATER ARE REQUIRED ON THIS PROJECT. THE ESTABLISHMENT PERIOD FOR A DENSE VEGETATIVE COVER IS CRITICAL. INITIALLY, FLOW SHOULD BE DIVERTED AWAY FROM PROPOSED SLOPES AND SWALES UNTIL GRASS CAN BE ESTABLISHED BUT WHEN THIS IS NOT PRACTICAL, PROPER PLACEMENT AND ANCHORING OF THE RECOMMENDED MULCH OR EROSION CONTROL BLANKET BECOMES EVEN MORE CRITICAL.

LOW STRENGTH/LANDSIDE PRONE – WEIKERT SOILS. IT IS RECOMMENDED THAT WEIKERT SOILS NOT BE USED IN BASIN EMBANKMENTS, AROUND STRUCTURES OR AS A ROADWAY SUBBASE. PRECAUTIONS SHOULD BE TAKEN TO PREVENT SLOPE FAILURES DUE TO IMPROPER CONSTRUCTION PRACTICES IN THESE SOILS SUCH AS OVER-STEEPENING AND OVERLOADING OF SLOPES, REMOVAL OF LATERAL SUPPORT, AND FAILURE TO PREVENT SATURATION OF SLOPES. ALL PROPOSED 3:1 SLOPES SHALL BE IMMEDIATELY STABILIZED WITH AN EROSION CONTROL BLANKET.

PIPING/SEEPAGE – BERKS, COMLY AND WEIKERT SOILS. THE PROPOSED ANTI-SEEP COLLARS AND CLAY CORES USED IN THE BASINS, AND THE WATERTIGHT PIPE JOINTS REQUIRED IN THE STORMSEWER SYSTEMS WILL RESOLVE THIS LIMITATION.

POOR SOURCE OF TOPSOIL – BERKS, COMLY AND WEIKERT SOILS ARE A POOR SOURCE FOR TOPSOIL. WHEREVER GOOD TO FAIR SOURCES OF TOPSOIL EXIST ON THE SITE, THEY SHOULD BE PRESERVED AND STOCKPILED FOR LATER USE IN RESTORATION. SOIL TESTS ARE RECOMMENDED TO DETERMINE LIME AND FERTILIZER NEEDS.

FROST ACTION – COMLY AND WEIKERT SOILS ARE SUSCEPTIBLE TO FROST ACTION. DO NOT PLACE FOUNDATIONS, FOOTINGS, OR FILL MATERIAL ON FROZEN GROUND. WHEN FREEZING TEMPERATURES MAY BE EXPECTED, DO NOT EXCAVATE TO FULL DEPTH INDICATED, UNLESS FOUNDATIONS, FOOTINGS OR FILL MATERIAL CAN BE PLACED IMMEDIATELY AFTER EXCAVATION HAS BEEN COMPLETED AND APPROVED. PROTECT EXCAVATION FROM FROST IF PLACING OF CONCRETE IS DELAYED.

SEQUENCE OF BMP INSTALLATION

ALL EARTH DISTURBANCE ACTIVITIES SHALL PROCEED IN ACCORDANCE WITH THE FOLLOWING STAGING OF EARTH MOVING ACTIVATES. EACH STAGE SHALL BE COMPLETED BEFORE A SUBSEQUENT STAGE IS INITIATED. ANY OTHER WORK NOT SHOWN ON THIS PLAN REQUIRES A SEPARATE EROSION AND SEDIMENTATION CONTROL PLAN.

THE LEBANON COUNTY CONSERVATION DISTRICT MUST BE NOTIFIED AT 717- 277-5275 AT LEAST 7 DAYS PRIOR TO ANY EARTH MOVING TO SCHEDULE A PRE-CONSTRUCTION MEETING.

BEFORE STARTING ANY EARTH DISTURBANCE ACTIVITIES, THE GENERAL CONTRACTOR SHALL INVITE ALL CONTRACTORS INVOLVED IN THOSE ACTIVITIES, THE COUNTY ENGINEER, THE DEVELOPER, THE EROSION AND SEDIMENTATION CONTROL PLAN DESIGNER, AND A REPRESENTATIVE OF THE LEBANON COUNTY CONSERVATION DISTRICT FOR AN ON-SITE PRE-CONSTRUCTION MEETING.

AT LEAST THREE DAYS BEFORE STARTING ANY EARTH MOVING ACTIVITY, THE CONTRACTORS INVOLVED IN THOSE ACTIVITIES SHALL NOTIFY PA ONE CALL SYSTEM INC. AT 1-800-242-1776 TO LOCATE BURIED UTILITIES.

A COPY OF THE APPROVED EROSION AND SEDIMENTATION CONTROL PLAN AND NPDES PERMIT MUST BE ON-SITE DURING CONSTRUCTION ACTIVITIES.

ONLY LIMITED DISTURBANCE WILL BE PERMITTED FOR ACCESS, GRADING AND ACQUIRING BORROW TO CONSTRUCT THE SEDIMENT BASINS. ALL PERIMETER CONTROLS (SEDIMENT BASINS AND FILTER SOCK) SHALL BE INSTALLED AND FUNCTIONAL PRIOR TO BULK GRADING.

THE CONTRACTOR SHALL KEEP DISTURBANCE TO THE MINIMUM AREA NECESSARY TO PERFORM GRADING OPERATIONS.

CESSATION OF ACTIVITIES FOR 4 DAYS OR LONGER REQUIRES TEMPORARY STABILIZATION.

BEFORE DISPOSING OF SOIL OR RECEIVING BORROW FROM THE SITE, THE OPERATOR MUST ASSURE THAT EACH SPOIL OR BORROW AREA HAS AN EROSION AND SEDIMENTATION CONTROL PLAN APPROVED BY THE LANCASTER COUNTY CONSERVATION DISTRICT, AND WHICH IS BEING IMPLEMENTED AND MAINTAINED ACCORDING TO CHAPTER 102 REGULATIONS. THE OPERATOR SHALL ALSO NOTIFY THE LEBANON COUNTY CONSERVATION DISTRICT IN WRITING OF ALL SPOIL AND BORROW AREAS WHEN THEY HAVE BEEN IDENTIFIED.

ANY DEVIATION FROM THIS SEQUENCE OR OTHER CHANGES TO THE APPROVED PLANS MUST RECEIVE PRIOR APPROVAL FROM THE LEBANON COUNTY CONSERVATION DISTRICT.

AFTER FINAL SITE STABILIZATION HAS BEEN ACHIEVED, TEMPORARY E&S BMPS MUST BE REMOVED. AREAS DISTURBED DURING REMOVAL MUST BE STABILIZED IMMEDIATELY IN ORDER TO ENSURE RAPID REVEGETATION OF DISTURBED AREAS. SUCH REMOVAL/CONVERSIONS SHOULD BE DONE ONLY DURING THE GERMINATING SEASON.

*ALL CRITICAL STAGES OF BMP CONSTRUCTION SHALL BE INSPECTED BY A LICENSED PROFESSIONAL AS INDICATED IN THE SEQUENCE BELOW. THE CONTRACTOR SHALL NOTIFY PIONEER MANAGEMENT AT LEAST 24-HOURS PRIOR TO NEEDING AN INSPECTION.

1. INSTALL ROCK CONSTRUCTION ENTRANCE.
2. INSTALL ORANGE CONSTRUCTION FENCE & FILTER SOCK. PERFORM DEMOLITION OF EXISTING STRUCTURES AND DRIVEWAY.
3. CONSTRUCT AND STABILIZE SEDIMENT BASINS 1 AND 2. INSTALL HW-3 TO I-1, HW-24 TO I-22, LEVEL SPREADERS, TEMPORARY SKIMMERS, BAFFLES AND OUTLET PROTECTION. DO NOT INSTALL AMENDED SOIL, PERMANENT ROCK FILTERS OR LANDSCAPING AT THIS TIME. INSTALL RETAINING WALLS.
4. CONSTRUCT AND STABILIZE PERMANENT SWALE 2, LEVEL SPREADER AND TEMPORARY SWALE 4. TEMPORARY SWALE 4 SHALL REMAIN IN PLACE UNTIL STORM SEWER SYSTEMS ARE FUNCTIONAL.
5. CONSTRUCT SEDIMENT TRAP A.
6. INSTALL SANITARY SEWER FROM MD-5 UP TO MD-6.
7. CONSTRUCT STORMSEWER FROM EW-4 UP TO HW-11.
*8. CONSTRUCT AND STABILIZE SWALES 11A AND 11B. INSTALL SOIL AMENDMENT AS FOLLOWS:
   A. SCARIFY SUBGRADE.
   B. MIX AMENDED SOIL ON A STOCKPILE AND THEN SPREAD ONTO SWALE.
   C. STABILIZE WITH SEED AND MULCH.
9. STRIP AND STOCKPILE TOPSOIL.
10. ROUGH GRADE ENTIRE SITE. STABILIZE AREAS NOT TO BE WORKED ON AS SOON AS POSSIBLE.
11. INSTALL SANITARY SEWER AND WATERLINES.
12. INSTALL ALL REMAINING STORMSEWER SYSTEMS. INSTALL INLET AND OUTLET PROTECTION.
*13. CONSTRUCT AND STABILIZE SWALES 19, 29, 33 AND 37.
14. INSTALL CURBING AND STONE SUBBASE AS SOON AS PRACTICAL. REMOVE SEDIMENT TRAP A ONCE STORM SEWER IS FUNCTIONAL.
15. HOME CONSTRUCTION MAY NOW BEGIN WHERE STONE BASE HAS BEEN APPLIED TO THE ROAD.
*16. INSTALL INFILTRATION TRENCHES AS HOMES ARE COMPLETED. INSTALL AS FOLLOWS:
   A. STRIP AND STOCKPILE TOPSOIL.
   B. EXCAVATE TRENCH AND SCARIFY BOTTOM.
   C. INSTALL GEOTEXTILE, PIPING AND STONE.
   D. COVER WITH GEOTEXTILE AND SOIL.
*17. INSTALL ON-LOT SOIL AMENDMENT AS FOLLOWS:
   A. SCARIFY SUBGRADE.
   B. MIX AMENDED SOIL ON A STOCKPILE AND THEN SPREAD ONTO SWALE.
   C. STABILIZE WITH SEED AND MULCH.
18. CONSTRUCT AND STABILIZE SWALE 3 UPON COMPLETION OF HOMES ON THE ADJACENT LOTS.
19. FINE GRADE AND STABILIZE AREAS WITH SEED AND MULCH. UNTIL SUCH TIME AS THE SITE IS PERMANENTLY STABILIZED, ALL EROSION AND SEDIMENTATION CONTROLS MUST BE MAINTAINED IN WORKING ORDER. MAINTENANCE MUST INCLUDE INSPECTION OF ALL EROSION AND SEDIMENTATION CONTROLS AFTER EACH RUNOFF EVENT (0.25" RAINFALL OR GREATER) AND ON A WEEKLY BASIS.
20. INSTALL PAVEMENT.
*21. OBTAIN PERMISSION FROM THE CONSERVATION DISTRICT PRIOR TO CONVERTING SEDIMENT BASINS TO THEIR FINAL BASIN CONFIGURATION. CONTACT PIONEER MANAGEMENT AT LEAST ONE DAY PRIOR TO BEGINNING THIS WORK TO PERFORM INSPECTIONS.
   A. CLEAN OUT BASIN BOTTOMS AND RE-ESTABLISH SUBGRADE AS NECESSARY.
   B. INSTALL AMENDED SOIL AND PERMANENT ROCK FILTERS.
   C. IMMEDIATELY STABILIZE WITH APPROPRIATE SEEDING AND LANDSCAPING ONLY DURING THE GROWING SEASON AND IN FAVORABLE WEATHER CONDITIONS.
   D. REMOVE TEMPORARY SKIMMERS AND PLYWOOD EXTENSIONS. INSTALL ORIFICE PLATES AND TRASH RACKS.
22. REMOVE ANY REMAINING E&S CONTROL MEASURES. ANY AREAS DISTURBED BY REMOVAL OF CONTROLS SHALL BE REPAIRED, STABILIZED AND PERMANENTLY SEEDED.

NOTE:
1. A LICENSED PROFESSIONAL SHALL INSPECT THESE CRITICAL STAGES OF BMP INSTALLATION. THE OPERATOR SHALL CONTACT PIONEER MANAGEMENT, LLC AT 717-481-5500 AT LEAST ONE DAY PRIOR TO BEGINNING ANY OF THIS WORK.

2. WITHIN 45 DAYS OF NPDES PERMIT AUTHORIZATION, THE PERMITTEE SHALL RECORD THE PCSM PLAN, AN O & M AGREEMENT, AN INSTRUMENT FOR THE DECLARATION OF RESTRICTIONS & COVENANTS, AND ANY OTHER INFORMATION REQUIRED BY THE PERMIT CONDITIONS. PROOF OF SUCH RECORDING SHALL BE PROVIDED TO THE CONSERVATION DISTRICT WITHIN 90 DAYS OF PERMIT AUTHORIZATION.

3. WITHIN 30 DAYS AFTER THE COMPLETION OF EARTH DISTURBANCE ACTIVITIES AUTHORIZED BY THIS PERMIT, INCLUDING THE PERMANENT STABILIZATION OF THE SITE AND PROPER INSTALLATION OF PCSM BMPS IN ACCORDANCE WITH THE APPROVED PCSM PLAN, OR UPON SUBMISSION OF THE NOTICE OF TERMINATION IF SOONER, THE PERMITTEE SHALL SUBMIT TO THE CONSERVATION DISTRICT A NOTICE OF TERMINATION FORM, LANDOWNER NOTIFICATION LETTERS (IF REQUIRED), AND AN AS-BUILT WITH A STATEMENT SIGNED BY A LICENSED PROFESSIONAL CERTIFYING THAT THE WORK HAS BEEN PERFORMED IN ACCORDANCE WITH THE TERMS AND CONDITIONS OF THE PERMIT AND THE APPROVED E&S AND PCSM PLANS. THE AS-BUILT SHALL BE RECORDED AND PROOF OF SUCH RECORDING SHALL BE PROVIDED TO THE CONSERVATION DISTRICT. ALL BMPS MUST BE INSTALLED, ALL E&S MEASURES MUST BE REMOVED AND SITE MUST BE COMPLETELY STABILIZED BEFORE PERMIT CAN BE TERMINATED.

LIABILITY NOTE:

FAILURE TO CORRECTLY INSTALL SEDIMENT CONTROL FACILITIES OR FAILURE TO PREVENT SEDIMENT LADEN RUNOFF FROM LEAVING THE CONSTRUCTION SITE OR FAILURE TO TAKE CORRECTIVE ACTIONS TO IMMEDIATELY RESOLVE FAILURES OF SEDIMENT CONTROL FACILITIES MAY RESULT IN ADMINISTRATIVE, CIVIL AND/OR CRIMINAL PENALTIES BEING INSTITUTED BY THE PENNSYLVANIA DEPARTMENT OF ENVIRONMENTAL PROTECTION AS DEFINED IN SECTION 602 OF THE CLEAN STREAMS LAW OF PENNSYLVANIA. THE CLEAN STREAMS LAW PROVIDES FOR UP TO $10,000 PER DAY IN CIVIL PENALTIES, UP TO $10,000 IN SUMMARY CRIMINAL PENALTIES, AND UP TO $25,000 IN MISDEMEANOR CRIMINAL PENALTIES FOR EACH VIOLATION.

NO.	DATE	REVISION
3	12-21-21	REVISED PER N. LEB. TWP., LEB. CNTY. ENG. & THE REVISED WALL DESIGN
2	9-29-21	REVISED PER SEWER AUTH, N.

F:\18\18-2000-01\CAD\Final Plan\Details.dwg, 34 EROSION AND SEDIMENTATION CONTROL DETAILS, 12/21/2021 1:52:03 PM, 1:1

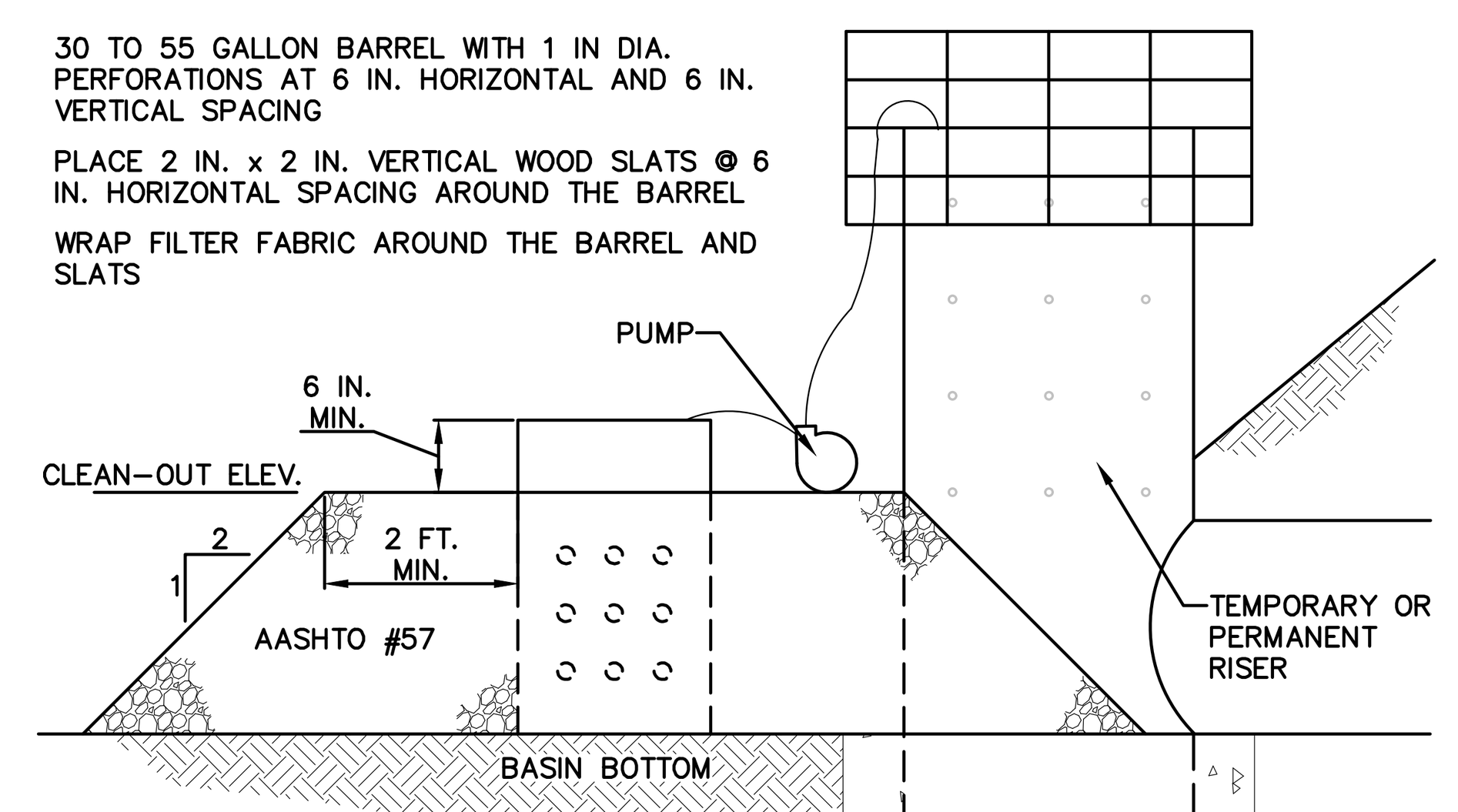

NOTES:
1. DEWATERING FACILITY SHALL BE INSTALLED IMMEDIATELY UPON COMPLETION OF BASIN/TRAP.
2. PRIOR TO INITIATING OPERATION OF DEWATERING FACILITY, ALL ACCUMULATED SEDIMENT SHALL BE CLEANED FROM THE INSIDE OF THE BARREL.
3. DEWATERING FACILITY SHALL BE CONTINUOUSLY MONITORED DURING OPERATION. IF FOR ANY REASON THE DEWATERING FACILITY CEASES TO FUNCTION PROPERLY, IT SHALL BE IMMEDIATELY SHUT DOWN AND NOT RESTARTED UNTIL THE PROBLEM HAS BEEN CORRECTED.

SEDIMENT BASIN OR SEDIMENT TRAP SEDIMENT STORAGE DEWATERING FACILITY

NOT TO SCALE

* 3/4 IN. PRESSURE TREATED PLYWOOD BOX WITH 2 IN. X 2 IN. PRESSURE TREATED CORNER SUPPORTS, SET INTO 1-1/2 IN. GRATE OFFSETS, CAULK ALL SEAMS TO FORM WATERTIGHT SEALS. ** TRASH RACK COMPOSED OF 1 IN. X 1 IN. X 1/8 IN. L (TYP.) AND #4 BARS (TYP.) WELDED TO THE ANGLES AND AT EACH INTERSECTION OF THE BARS; #4 BARS SPACED AT HALF THE DIAMETER OF THE BARREL MAX.

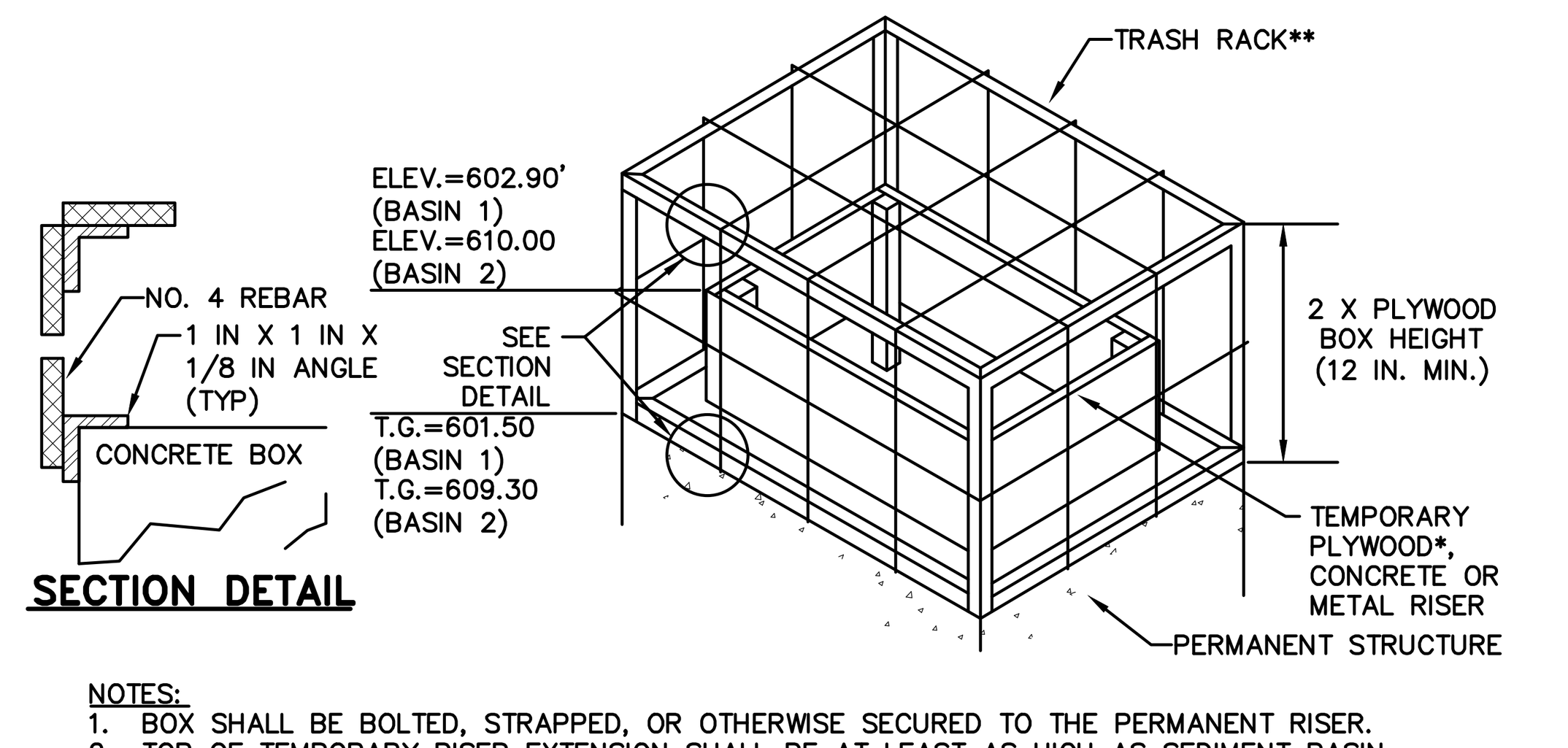

NOTES:
1. BOX SHALL BE BOLTED, STRAPPED, OR OTHERWISE SECURED TO THE PERMANENT RISER.
2. TOP OF TEMPORARY RISER EXTENSION SHALL BE AT LEAST AS HIGH AS SEDIMENT BASIN TEMPORARY RISER AND SHALL BE 6 IN. (MINIMUM) BELOW CREST OF EMERGENCY SPILLWAY.
3. ALL JOINTS SHALL BE WATER TIGHT.
4. CLOGGED OR DAMAGED SPILLWAYS SHALL BE REPAIRED IMMEDIATELY. TRASH AND OTHER DEBRIS SHALL BE REMOVED FROM THE BASIN AND RISER.

TEMPORARY RISER EXTENSION AND TRASH RACK FOR PERMANENT STRUCTURE (BASIN 1 & 2)

NOT TO SCALE

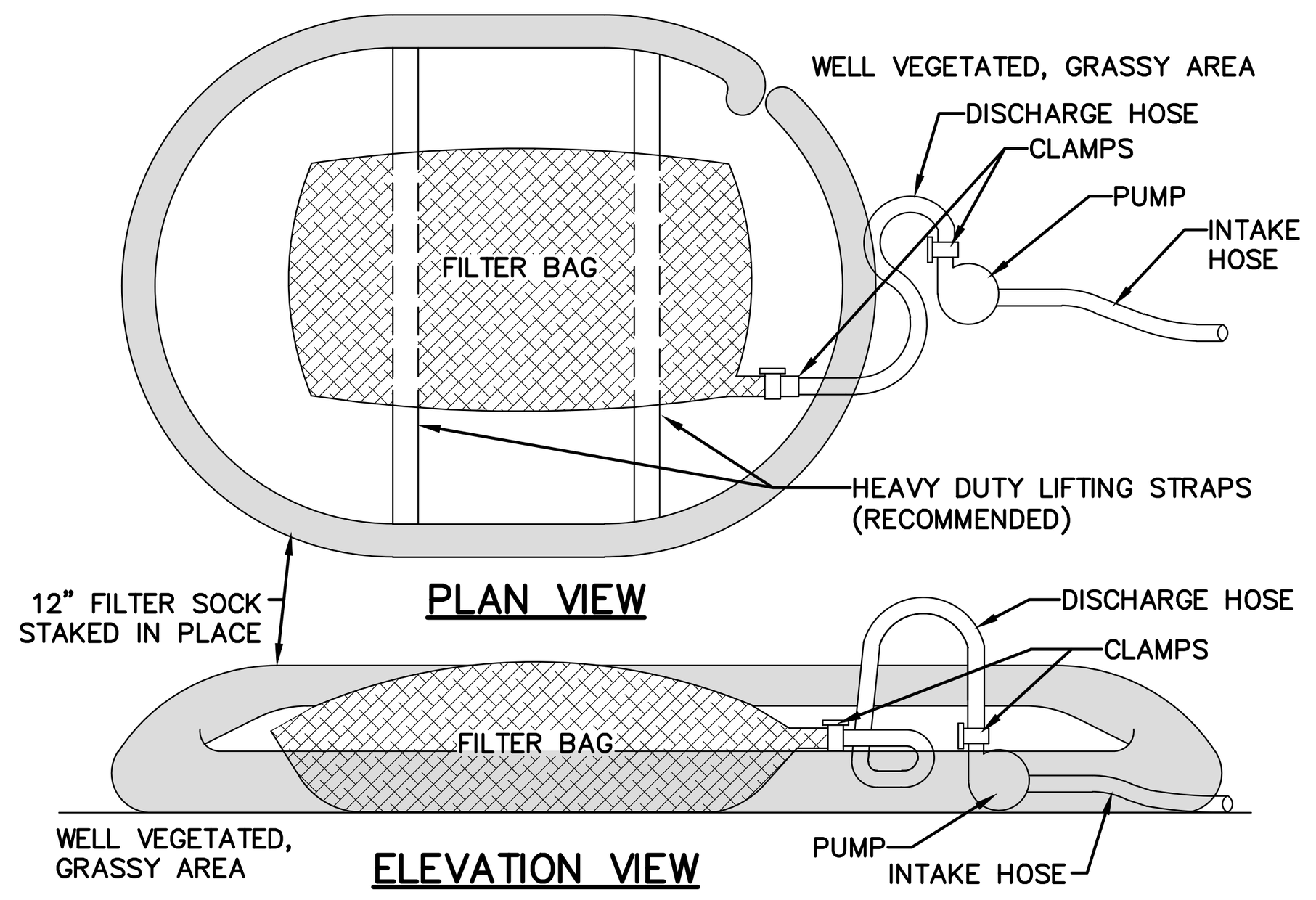

NOTES:
1. LOW VOLUME FILTER BAGS SHALL BE MADE FROM NON-WOVEN GEOTEXTILE MATERIAL SEWN WITH HIGH STRENGTH, DOUBLE STITCHED "J" TYPE SEAMS. THEY SHALL BE CAPABLE OF TRAPPING PARTICLES LARGER THAN 150 MICRONS. HIGH VOLUME FILTER BAGS SHALL BE MADE FROM WOVEN GEOTEXTILES THAT MEET THE FOLLOWING STANDARDS:

PROPERTY	TEST METHOD	MINIMUM STANDARD
AVG. WIDE WIDTH STRENGTH	ASTM D-4884	60 LB/IN
GRAB TENSILE	ASTM D-4632	205 LB
PUNCTURE	ASTM D-4833	110 LB
MULLEN BURST	ASTM D-3786	350 PSI
UV RESISTANCE	ASTM D-4355	70%
AOS % RETAINED	ASTM D-4751	80 SIEVE

2. A SUITABLE MEANS OF ACCESSING THE BAG WITH MACHINERY REQUIRED FOR DISPOSAL PURPOSES SHALL BE PROVIDED. FILTER BAGS SHALL BE REPLACED WHEN THEY BECOME 1/2 FULL OF SEDIMENT. SPARE BAGS SHALL BE KEPT AVAILABLE FOR REPLACEMENT OF THOSE THAT HAVE FAILED OR ARE FILLED. BAGS SHALL BE PLACED ON STRAPS TO FACILITATE REMOVAL UNLESS BAGS COME WITH LIFTING STRAPS ALREADY ATTACHED.
3. BAGS SHALL BE LOCATED IN WELL-VEGETATED (GRASSY) AREA, AND DISCHARGE ONTO STABLE, EROSION RESISTANT AREAS. WHERE THIS IS NOT POSSIBLE, A GEOTEXTILE UNDERLAYMENT AND FLOW PATH SHALL BE PROVIDED. BAGS MAY BE PLACED ON FILTER STONE TO INCREASE DISCHARGE CAPACITY. BAGS SHALL NOT BE PLACED ON SLOPES GREATER THAN 5%. FOR SLOPES EXCEEDING 5%, CLEAN ROCK OR OTHER NON-ERODIBLE AND NON-POLLUTING MATERIAL MAY BE PLACED UNDER THE BAG TO REDUCE SLOPE STEEPNESS.
4. NO DOWNSLOPE SEDIMENT BARRIER IS REQUIRED FOR MOST INSTALLATIONS. COMPOST BERM OR COMPOST FILTER SOCK SHALL BE INSTALLED BELOW BAGS LOCATED IN HQ OR EV WATERSHEDS, WITHIN 50 FEET OF ANY RECEIVING SURFACE WATER OR WHERE GRASSY AREA IS NOT AVAILABLE.
5. THE PUMP DISCHARGE HOSE SHALL BE INSERTED INTO THE BAGS IN THE MANNER SPECIFIED BY THE MANUFACTURER AND SECURELY CLAMPED. A PIECE OF PVC PIPE IS RECOMMENDED FOR THIS PURPOSE.
6. THE PUMPING RATE SHALL BE NO GREATER THAN 750 GPM OR 1/2 THE MAXIMUM SPECIFIED BY THE MANUFACTURER, WHICHEVER IS LESS. PUMP INTAKES SHALL BE FLOATING AND SCREENED.
7. FILTER BAGS SHALL BE INSPECTED DAILY. IF ANY PROBLEM IS DETECTED, PUMPING SHALL CEASE IMMEDIATELY AND NOT RESUME UNTIL THE PROBLEM IS CORRECTED.

PUMPED WATER FILTER BAG

NOT TO SCALE

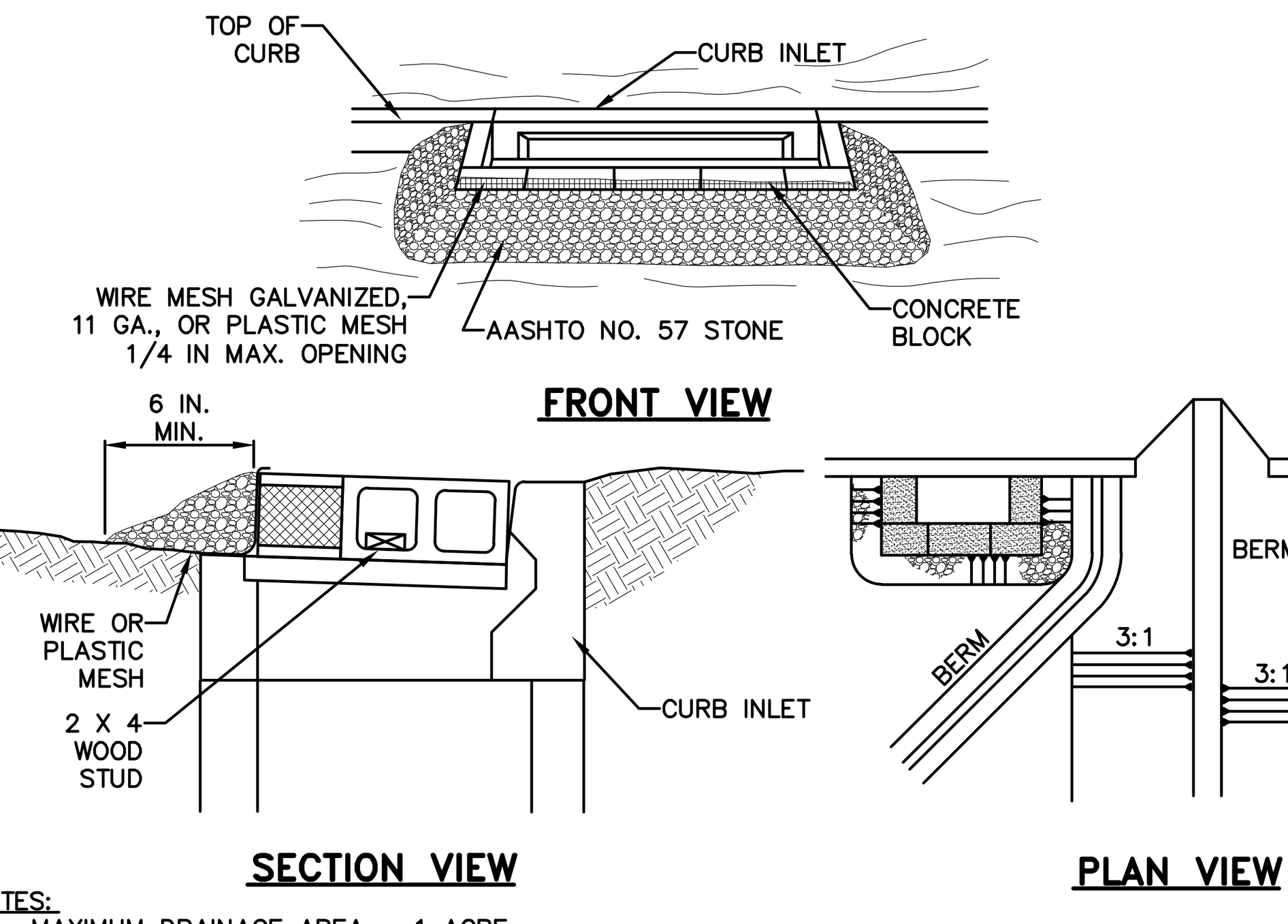

NOTES:
1. MAXIMUM DRAINAGE AREA = 1 ACRE.
2. INLET PROTECTION SHALL NOT BE REQUIRED FOR INLET TRIBUTARY TO SEDIMENT BASIN OR TRAP. BERMS SHALL BE REQUIRED FOR ALL INSTALLATIONS.
3. ROLLED EARTHEN BERM SHALL BE PROVIDED AND MAINTAINED IMMEDIATELY DOWN GRADIENT OF THE PROTECTED INLET UNTIL ROADWAY IS STONED. ROAD SUBBASE BERM SHALL BE MAINTAINED UNTIL ROADWAY IS PAVED. SIX INCH MINIMUM HEIGHT ASPHALT BERM SHALL BE MAINTAINED UNTIL ROADWAY SURFACE RECEIVES FINAL COAT.
4. SEDIMENT SHALL BE REMOVED WHEN IT REACHES HALF THE HEIGHT OF THE STONE. DAMAGED OR CLOGGED INSTALLATIONS SHALL BE REPAIRED OR REPLACED IMMEDIATELY.
5. FOR SYSTEMS DISCHARGING TO HQ OR EV SURFACE WATER, A 6 INCH THICK COMPOST LAYER SHALL BE SECURELY ANCHORED ON OUTSIDE AND OVER TOP OF STONE.
6. DO NOT USE ON MAJOR PAVED ROADWAYS WHERE PONDING MAY CAUSE TRAFFIC HAZARDS.

STONE AND CONCRETE BLOCK INLET PROTECTION – TYPE C INLET

NOT TO SCALE

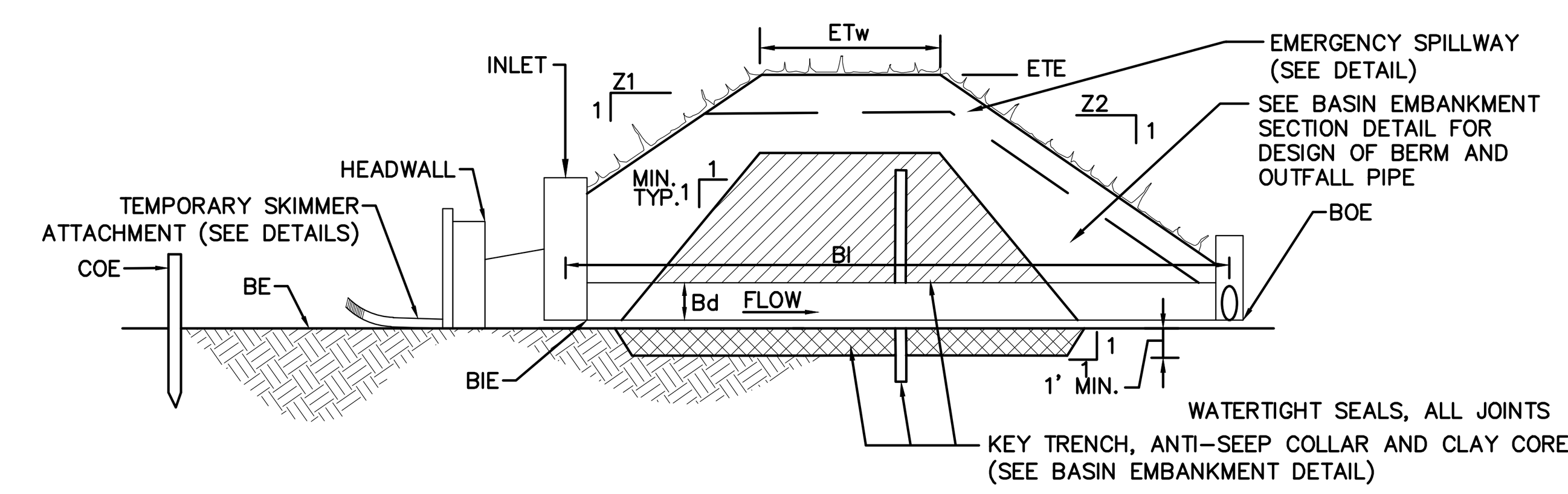

BASIN NO.	Z1 (FT)	Z2 (FT)	TEMPORARY RISER: DIA TRd. (IN)	TEMPORARY RISER: CREST ELEV. TRCE (FT)	TEMPORARY RISER: MAT'L	BARREL: DIA Bd (IN)	BARREL: INLET ELEV. BIE (FT)	BARREL: MAT'L	BARREL: LENGTH Bl (FT)	BARREL: OUTLET ELEV. BOE (FT)	EMBANKMENT: TOP ELEV. ETE (FT)	EMBANKMENT: TOP WIDTH ETw (FT)	CLEAN OUT ELEV. COE (FT)	BOTTOM ELEV. BE (FT)
1	5	5	N/A	602.90	METAL	30"	598.25	SLCPP	120	597.50	604.80	8'	599.50	598.50
2	5	5	N/A	610.00	METAL	24"	604.25	SLCPP	50	602.75	612.00	8'	606.60	605.25

NOTES:
1. SEDIMENT BASINS, INCLUDING ALL APPURTENANT WORKS, SHALL BE CONSTRUCTED TO THE DETAIL AND DIMENSIONS SHOWN ON THE E&S PLAN DRAWINGS.
2. AREA UNDER EMBANKMENT SHALL BE CLEARED, GRUBBED, AND STRIPPED OF TOPSOIL TO A DEPTH OF TWO FEET PRIOR TO ANY PLACEMENT AND COMPACTION OF EARTHEN FILL. IN ORDER TO FACILITATE MAINTENANCE AND RESTORATION, THE POOL AREA SHALL BE CLEARED OF ALL BRUSH, TREES, AND OBJECTIONABLE MATERIAL. FILL MATERIAL FOR THE EMBANKMENTS SHALL BE FREE OF ROOTS, OR OTHER WOODY VEGETATION, ORGANIC MATERIAL, LARGE STONES, AND OTHER OBJECTIONABLE MATERIALS. THE EMBANKMENT SHALL BE COMPACTED IN LAYERED LIFTS OF NOT MORE THAN 6 TO 9 IN. THE MAXIMUM ROCK SIZE SHALL BE NO GREATER THAN 2/3 THE LIFT THICKNESS.
3. UPON COMPLETION, THE EMBANKMENT SHALL BE SEEDED, MULCHED, BLANKETED OR OTHERWISE STABILIZED ACCORDING TO THE SPECIFICATIONS OF THE E&S PLAN DRAWINGS. TREES SHALL NOT BE PLANTED ON THE EMBANKMENT.
4. INSPECT ALL SEDIMENT BASINS ON AT LEAST A WEEKLY BASIS AND AFTER EACH RUNOFF EVENT. PROVIDE ACCESS FOR SEDIMENT REMOVAL AND OTHER REQUIRED MAINTENANCE ACTIVITIES. A CLEAN OUT STAKE SHALL BE PLACED NEAR THE CENTER OF EACH BASIN. ACCUMULATED SEDIMENT SHALL BE REMOVED WHEN IT HAS REACHED THE CLEAN OUT ELEVATION ON THE STAKE AND THE BASIN RESTORED TO ITS ORIGINAL DIMENSIONS. DISPOSE OF MATERIALS REMOVED FROM THE BASIN IN THE MANNER DESCRIBED IN THE E&S PLAN.
5. BASIN EMBANKMENTS, SPILLWAYS, AND OUTLETS SHALL BE INSPECTED FOR EROSION, PIPING AND SETTLEMENT. NECESSARY REPAIRS SHALL BE IMMEDIATELY. DISPLACED RIPRAP WITHIN THE OUTLET ENERGY DISSIPATER SHALL BE REPLACED IMMEDIATELY.
6. ACCUMULATED SEDIMENT SHALL BE REMOVED AND DISTURBED AREAS SHALL BE STABILIZED INSIDE THE BASIN BEFORE CONVERSION TO A STORMWATER MANAGEMENT FACILITY. A PUMPED WATER FILTER BAG SHALL BE USED TO DEWATER SATURATED SEDIMENT PRIOR TO ITS REMOVAL. ROCK FILTERS SHALL BE ADDED AS NECESSARY.

TEMPORARY SEDIMENT BASIN WITH SKIMMER

NOT TO SCALE

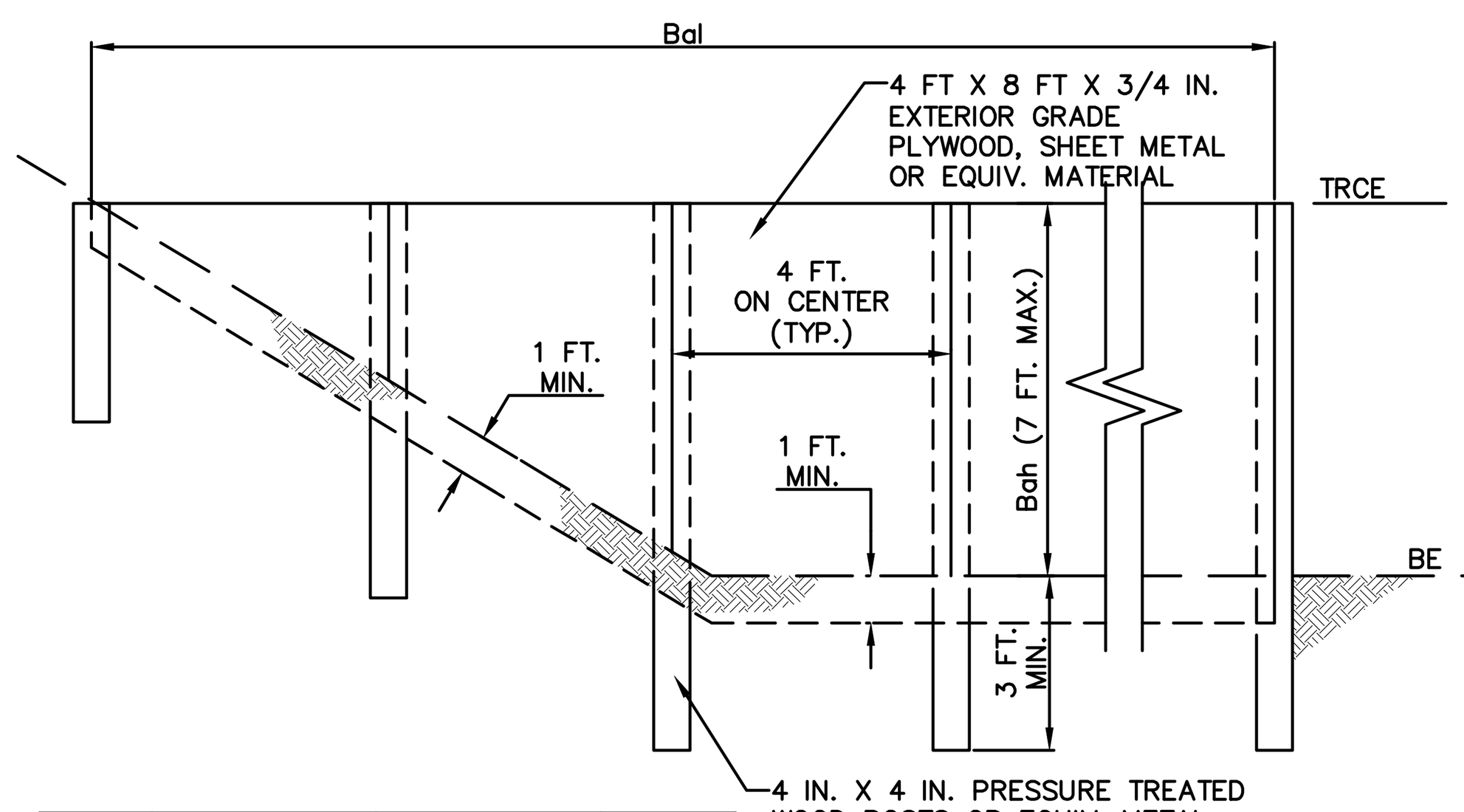

BASIN OR TRAP NO.	BAFFLE: LENGTH Bal (FT)	BAFFLE: HEIGHT Bah (FT)	TEMPORARY RISER: CREST ELEV. TRCE (FT)	BOTTOM: BOTTOM ELEV BE (FT)
1	116	4.40	602.90	598.50
2	80	5.25	610.00	605.25
A	56	3.00	605.50	602.50

NOTES:
1. SEE PLAN FOR PROPER LOCATION AND ORIENTATION.
2. AN ACCEPTABLE ALTERNATIVE IS TO INSTALL A SUPER SILT FENCE AT THE BAFFLE LOCATION
3. BAFFLES SHALL BE TIED INTO ONE SIDE OF THE BASIN UNLESS OTHERWISE SHOWN ON THE PLAN DRAWINGS.
4. SUBSTITUTION OF MATERIALS NOT SPECIFIED IN THIS DETAIL SHALL BE APPROVED BY THE DEPARTMENT OR THE LOCAL CONSERVATION DISTRICT BEFORE INSTALLATION.
5. DAMAGED OR WARPED BAFFLES SHALL BE REPLACED WITHIN 7 DAYS OF INSPECTION.

BAFFLE

NOT TO SCALE

LIABILITY NOTE:

FAILURE TO CORRECTLY INSTALL SEDIMENT CONTROL FACILITIES OR FAILURE TO PREVENT SEDIMENT LADEN RUNOFF FROM LEAVING THE CONSTRUCTION SITE OR FAILURE TO TAKE CORRECTIVE ACTIONS TO IMMEDIATELY RESOLVE FAILURES OF SEDIMENT CONTROL FACILITIES MAY RESULT IN ADMINISTRATIVE, CIVIL AND/OR CRIMINAL PENALTIES BEING INSTITUTED BY THE PENNSYLVANIA DEPARTMENT OF ENVIRONMENTAL PROTECTION AS DEFINED IN SECTION 602 OF THE CLEAN STREAMS LAW OF PENNSYLVANIA. THE CLEAN STREAMS LAW PROVIDES FOR UP TO $10,000 PER DAY IN CIVIL PENALTIES, UP TO $10,000 IN SUMMARY CRIMINAL PENALTIES, AND UP TO $25,000 IN MISDEMEANOR CRIMINAL PENALTIES FOR EACH VIOLATION.

SEDIMENT FACILITY	CLEANOUT ELEVATION (A)
BASIN 1	599.00
BASIN 2	606.60
TRAP A	604.00

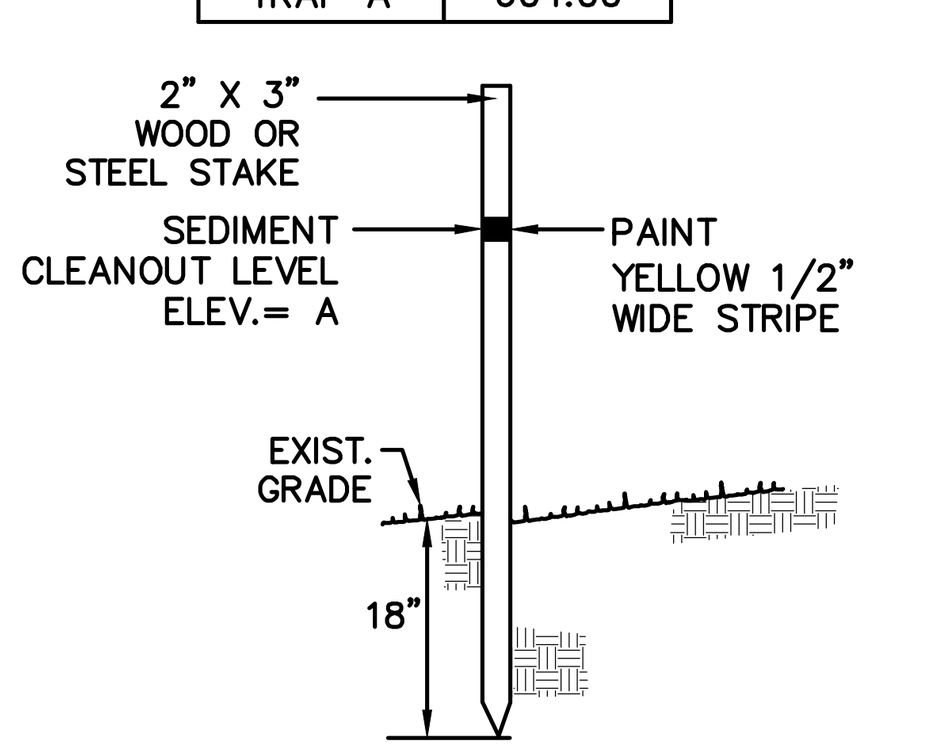

CLEANOUT STAKE

NOT TO SCALE

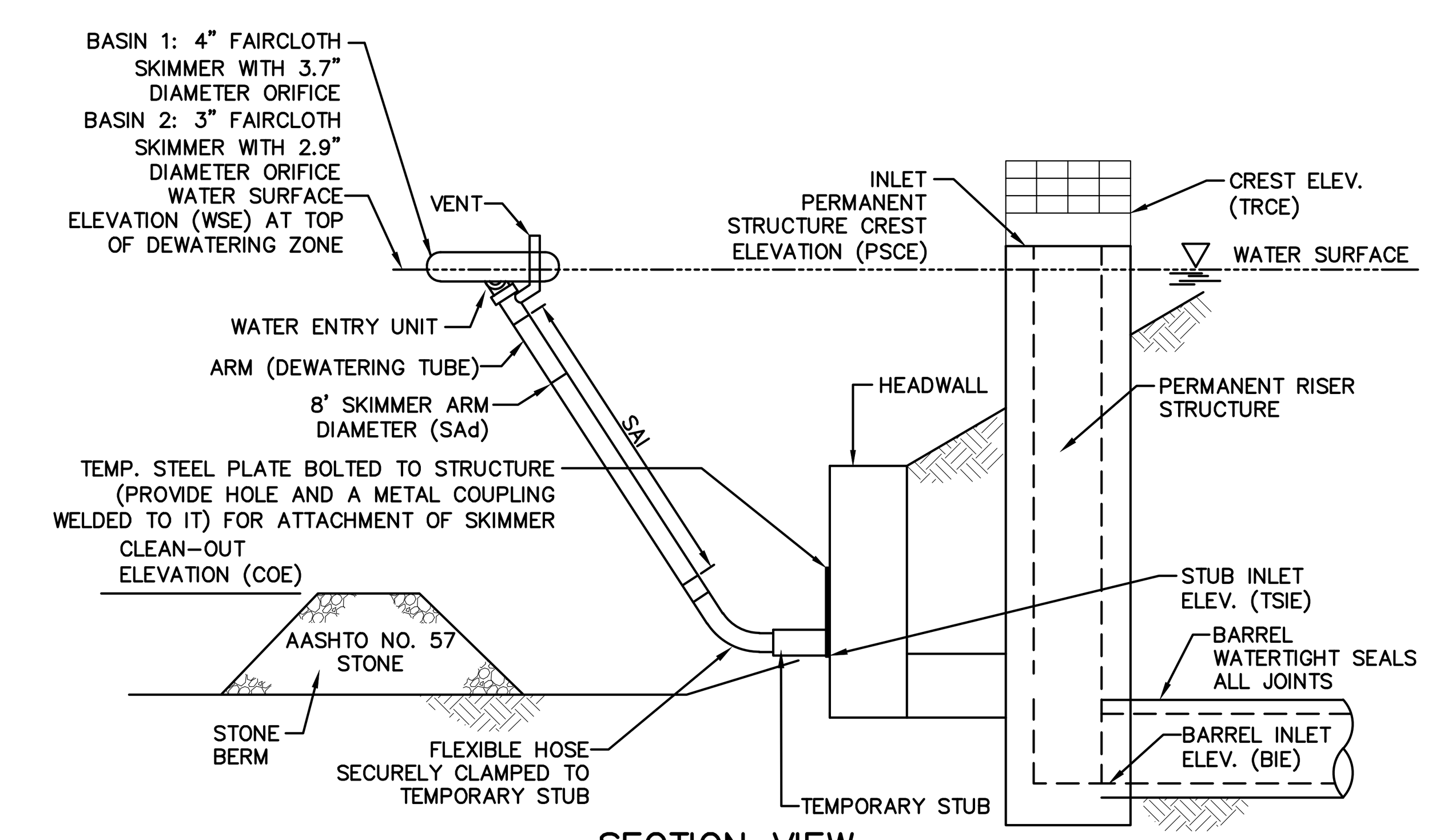

BASIN NO.	WATER SURFACE ELEVATION (FT)	ARM LENGTH (SAI) (FT)	ARM DIA. (SAd) (IN)	ORIFICE DIA. (IN)	TOP OF LANDING DEVICE ELEVATION (FT)	FLEXIBLE HOSE LENGTH (IN)	FLEXIBLE HOSE ATTACHMENT ELEVATION (FT)
1	602.90	8	3	3.9	599.00	12	599.00
2	610.00	8	2	2.8	606.60	12	606.60

BASIN NO.	TEMPORARY STUB: INSIDE DIA (IN)	TEMPORARY STUB: INVERT ELEV TSIE (FT)	TEMPORARY STUB: MAT'L	PERMANENT RISER: CREST ELEV PSCE (FT)	PERMANENT RISER: HORIZ OPENING LENGTH El (FT)	PERMANENT RISER: HORIZ OPENING WIDTH Ew (FT)	RISER EXTENSION: CREST ELEV TRCE (FT)	RISER EXTENSION: HORIZ OPENING LENGTH (FT)	RISER EXTENSION: HORIZ OPENING WIDTH (FT)	BARREL: INLET ELEV BIE (FT)
1	4	599.00	METAL	602.00	3.77	2	602.90	3.77	2	598.25
2	4	606.60	METAL	609.50	3.77	2	610.00	3.77	2	604.25

NOTES:
1. ALL ORIFICES ON PERMANENT RISER BELOW TEMPORARY RISER EXTENSION SHALL HAVE WATER-TIGHT TEMPORARY SEALS PROVIDED. TEMPORARY STUB INVERT ELEVATION SHALL BE SET AT OR BELOW SEDIMENT CLEAN-OUT ELEVATION.
2. A ROPE SHALL BE ATTACHED TO THE SKIMMER ARM TO FACILITATE ACCESS TO THE SKIMMER ONCE INSTALLED.
3. SKIMMER SHALL BE INSPECTED WEEKLY AND AFTER EACH RUNOFF EVENT.
4. ANY MALFUNCTIONING SKIMMER SHALL BE REPAIRED OR REPLACED WITHIN 24 HOURS OF INSPECTION.
5. ICE OR SEDIMENT BUILDUP AROUND THE PRINCIPAL SPILLWAY SHALL BE REMOVED SO AS TO ALLOW THE SKIMMER TO RESPOND TO FLUCTUATING WATER ELEVATIONS.
6. SEDIMENT SHALL BE REMOVED FROM THE BASIN WHEN IT REACHES THE LEVEL MARKED ON THE SEDIMENT CLEAN-OUT STAKE OR THE TOP OF THE STONE BERM. SEE DETAIL FOR CONFIGURATION OF STONE BERM.

SKIMMER ATTACHED TO PERMANENT RISER

NOT TO SCALE

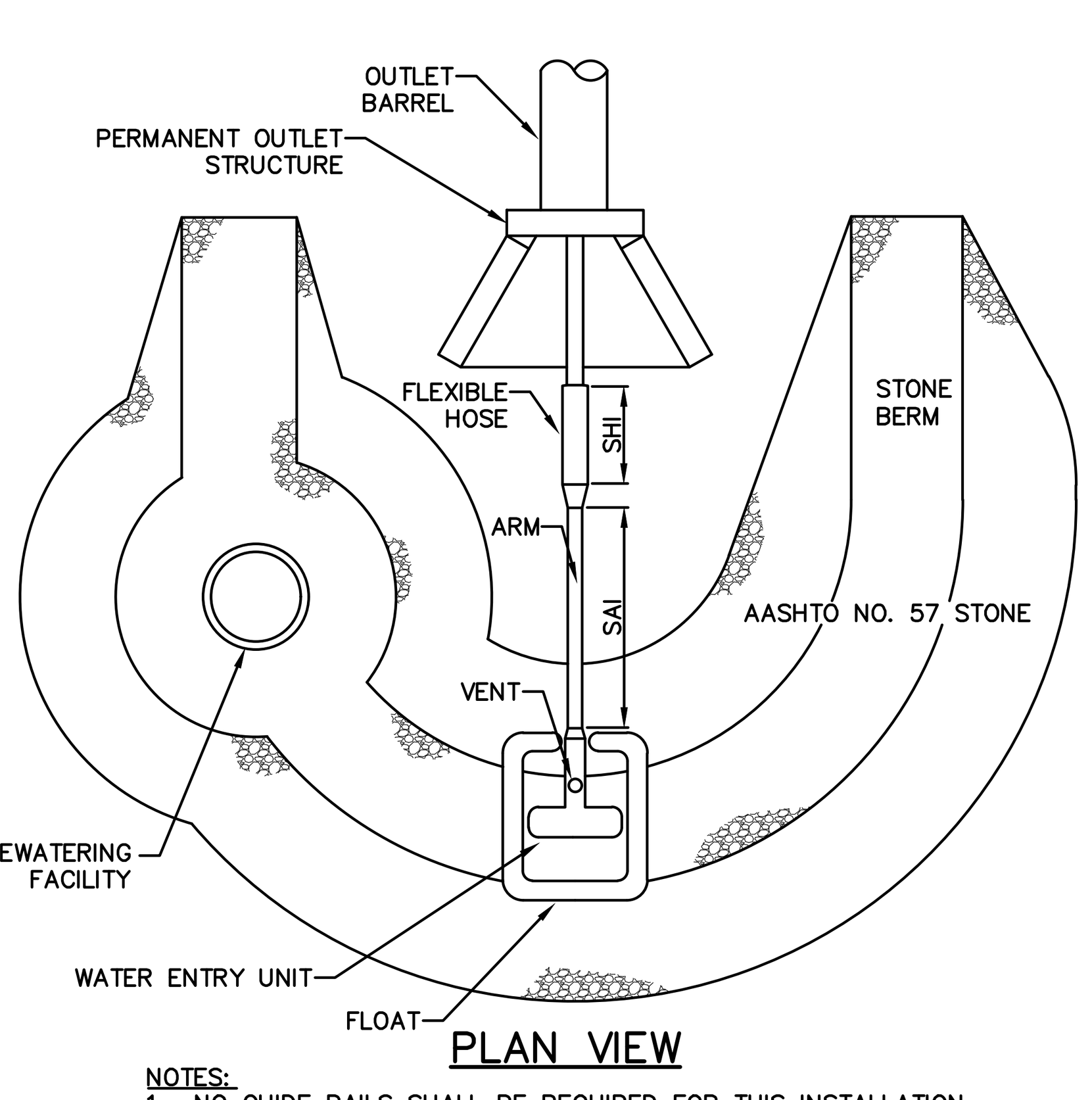

NOTES:
1. NO GUIDE RAILS SHALL BE REQUIRED FOR THIS INSTALLATION.

SKIMMER WITH STONE LANDING BERM

NOT TO SCALE

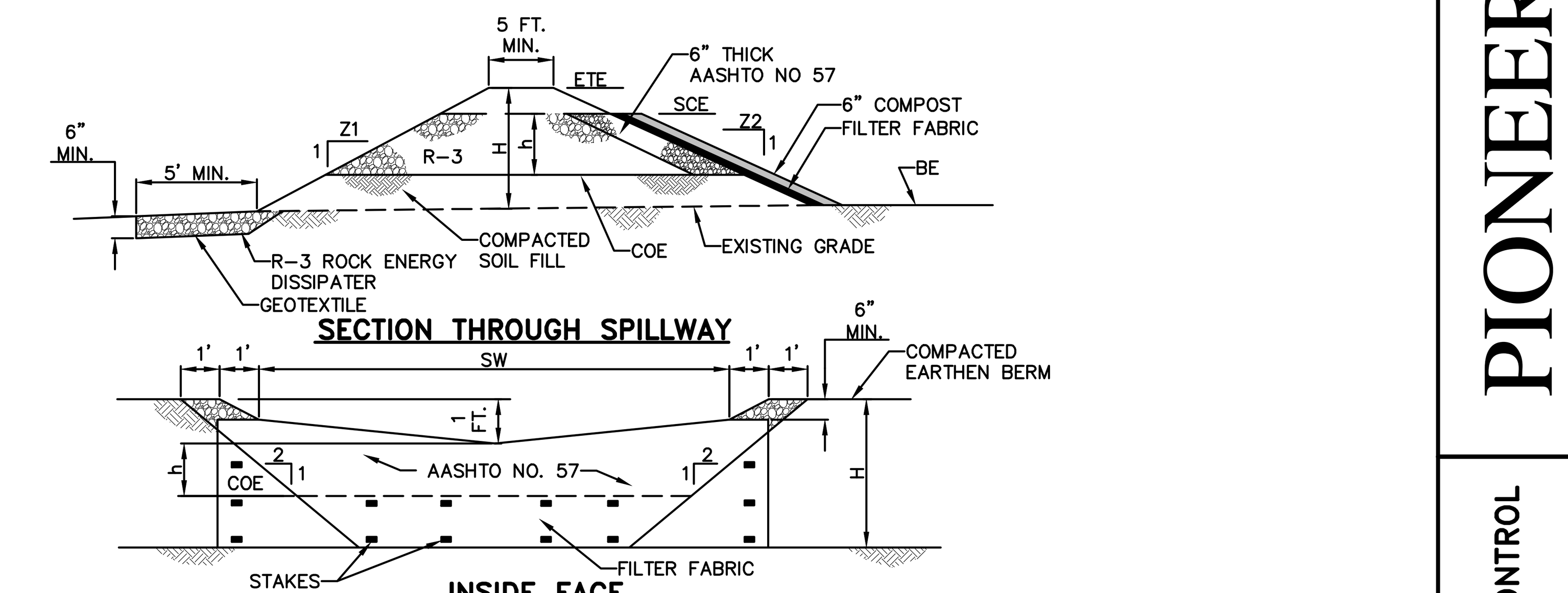

TRAP NO.	Z1 (FT)	Z2 (FT)	H (FT)	h (FT)	EMBANK. TOP ELEV. ETE (FT)	SPILLWAY CREST ELEV. SCE (FT)	CLEAN OUT ELEV. COE (FT)	BOTTOM ELEV. BE (FT)	SPILLWAY WIDTH SW (FT)
4	2	2	4.0	3.0	606.50	605.50	604.00	602.50	10'

NOTES:
1. EMBANKMENT OUTLET SHALL BE COMPOSED ENTIRELY OF ROCK ABOVE CLEAN OUT ELEVATION (COE); MAIN BODY R-3 OR LARGER -- R-4 TO BE USED FOR DRAINAGE AREAS GREATER THAN 3.0 ACRES, INSIDE FACE AASHTO # 57 STONE OR SMALLER. A 6 IN. THICK LAYER OF COMPOST, COMPOST SOCK, OR CLEAN SAND SHALL BE INSTALLED ON TOP OF THE AASHTO #57 STONE AND SECURELY ANCHORED IN HQ WATERSHEDS. 24 IN. DIAMETER COMPOST SOCK(S) SHALL BE USED IN PLACE OF FILTER FABRIC AND AASHTO #57 STONE IN EV WATERSHEDS.
2. FILL MATERIAL FOR THE EMBANKMENTS SHALL BE FREE OF ROOTS, OR OTHER WOODY VEGETATION, ORGANIC MATERIAL, LARGE STONES, AND OTHER OBJECTIONABLE MATERIALS. THE EMBANKMENT SHALL BE COMPACTED IN LAYERED LIFTS OF NOT MORE THAN 9 IN.. THE MAXIMUM ROCK SIZE SHALL BE NO GREATER THAN 6 IN.
3. UPON COMPLETION, THE EMBANKMENT SHALL BE SEEDED AND MULCHED OR OTHERWISE STABILIZED ACCORDING TO THE SPECIFICATIONS OF THE E&S PLAN DRAWINGS.
4. ALL SEDIMENT TRAPS SHALL BE INSPECTED AT LEAST WEEKLY AND AFTER EACH RUNOFF EVENT.
5. ACCESS FOR SEDIMENT REMOVAL AND OTHER REQUIRED MAINTENANCE ACTIVITIES SHALL BE PROVIDED.
6. A CLEAN OUT STAKE SHALL BE PLACED NEAR THE CENTER OF EACH TRAP. ACCUMULATED SEDIMENT SHALL BE REMOVED WHEN IT HAS REACHED THE CLEAN OUT ELEVATION ON THE STAKE AND THE TRAP RESTORED TO ITS ORIGINAL DIMENSIONS. DISPOSE OF MATERIALS REMOVED FROM THE TRAP IN THE MANNER DESCRIBED IN THE E&S PLAN.
7. CHECK EMBANKMENTS, SPILLWAYS, AND OUTLETS FOR EROSION, PIPING AND SETTLEMENT. CLOGGED OR DAMAGED SPILLWAYS AND/OR EMBANKMENTS SHALL BE IMMEDIATELY RESTORED TO THE DESIGN SPECIFICATIONS.
8. DISPLACED RIPRAP WITHIN THE SPILLWAY OR OUTLET PROTECTION SHALL BE REPLACED IMMEDIATELY.
9. ACCUMULATED SEDIMENT SHALL BE REMOVED AND DISTURBED AREAS INSIDE THE TRAP SHALL BE STABILIZED BEFORE CONVERSION TO A STORMWATER MANAGEMENT FACILITY. TO ASSIST IN REMOVING SEDIMENT, WHICH MAY BE SATURATED, A DEVICE SUCH AS IS SHOWN IN STANDARD CONSTRUCTION DETAIL #7-18 MAY BE USED TO DEWATER THE SEDIMENT PRIOR TO ITS REMOVAL.

EMBANKMENT SEDIMENT TRAP

NOT TO SCALE

NO.	DATE	REVISION
3	12-21-21	REVISED PER N. LEB. TWP., LEB. CNTY. ENG. & THE REVISED WALL DESIGN
2	9-29-21	REVISED PER SEWER AUTH., N. LEB. TWP., LEB. CNTY. ENG. & THE REVISED WALL DESIGN
1	6-18-21	REVISED PER LCCD, DEP, SEWER AUTH., N. LEB. TWP., & LCPD

FOR PIONEER MANAGEMENT BY: FIELDBOOK NO. | SURV. CHIEF:
MANAGER: JAMES C. HENKE
DESIGN BY: JDB/KWG | CHKD BY: JDB/JCH | DRAWN BY: JDB/MLS | CHKD BY: JCH
DRAWING REFERENCE: F:\18\18-2000-01\CAD\Final Plan\Details.dwg
XREFS: TB [F:\18\18-2000-01\CAD\Final Plan\X-Refs\TB.dwg]

CLIENT
MR. S. GERALD MUSSER
144 BELL ROAD
PALMYRA, PA 17078
(717) 821-1129

SCALE: AS NOTED

PIONEER Management, LLC
111 Millersville Road, Lancaster, PA 17603
Phone (717) 481-5500 · Fax (717) 481-4955
Email: jh@pioneermanagementllc.com
Website: www.pioneermanagementllc.com

EROSION AND SEDIMENTATION CONTROL DETAILS
FOR THE FINAL SUBDIVISION AND LAND DEVELOPMENT PLAN OF
MAPLEDALE ESTATES
NORTH LEBANON TOWNSHIP LEBANON COUNTY, PA

DATE: FEB. 25, 2021
SHEET NO. 34 OF 36
DWG. NO. 18-2000-01-B

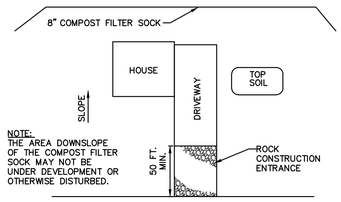

NOTE:
THE AREA DOWNSLOPE OF THE COMPOST FILTER SOCK MAY NOT BE UNDER DEVELOPMENT OR OTHERWISE DISTURBED.

PLAN VIEW

TYPICAL ON-LOT BMPs FOR LOT BELOW ROADWAY

NOT TO SCALE

NOTES:
1. THE AREA DOWNSLOPE OF THE COMPOST FILTER SOCK MAY NOT BE UNDER DEVELOPMENT OR OTHERWISE DISTURBED.
2. THE UPSLOPE DIVERSION CHANNEL SHOULD BE INSTALLED WHEREVER RUNOFF FROM AREAS ABOVE THE LOT ARE NOT OTHERWISE DIVERTED AWAY FROM THE LOT. THE CHANNEL SHOULD BE PROPERLY SIZED AND PROVIDED WITH A SUITABLE PROTECTIVE LINING. THE DESIGNER AND/OR CONTRACTOR MUST EXERCISE CAUTION TO PROTECT ALL DOWNSTREAM PROPERTY OWNERS WHEN SELECTING A DISCHARGE POINT FOR THIS CHANNEL.
3. IN AREAS WHERE SLOPE IS AT AN OBLIQUE ANGLE TO THE ROADWAY, BMPS SHALL BE ADJUSTED ACCORDINGLY.
4. DIVERSION CHANNEL MAY OUTLET TO ROADSIDE DITCH OR STORM SEWER SYSTEM, BUT NOT ONTO STREET OR ROADWAY.

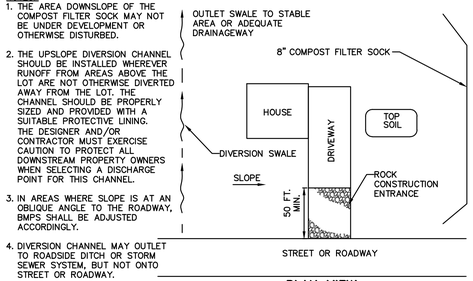

PLAN VIEW

TYPICAL ON-LOT BMPs FOR LOT ALONG ASCENDING OR DESCENDING ROADWAY

NOT TO SCALE

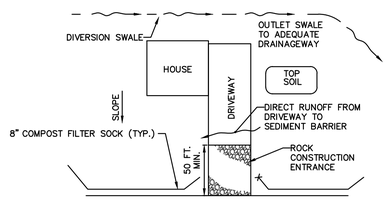

PLAN VIEW

NOTE:
THE UPSLOPE DIVERSION CHANNEL SHOULD BE INSTALLED WHEREVER THE LOT EXTENDS MORE THAN 150 FEET ABOVE THE ROADWAY OR WHERE RUNOFF FORM AREAS ABOVE THE LOT IS NOT OTHERWISE DIVERTED AWAY FROM THE LOT. THE CHANNEL SHOULD BE PROPERLY SIZED AND PROVIDED WITH A SUITABLE PROTECTIVE LINING. THE DESIGNER AND/OR CONTRACTOR MUST EXERCISE CAUTION TO PROTECT ALL DOWNSTREAM PROPERTY OWNERS WHEN SELECTING A DISCHARGE POINT FOR THIS CHANNEL.

TYPICAL ON-LOT BMPs FOR LOT ABOVE ROADWAY

NOT TO SCALE

LIABILITY NOTE:

FAILURE TO CORRECTLY INSTALL SEDIMENT CONTROL FACILITIES OR FAILURE TO PREVENT SEDIMENT LADEN RUNOFF FROM LEAVING THE CONSTRUCTION SITE OR FAILURE TO TAKE CORRECTIVE ACTIONS TO IMMEDIATELY RESOLVE FAILURES OF SEDIMENT CONTROL FACILITIES MAY RESULT IN ADMINISTRATIVE, CIVIL AND/OR CRIMINAL PENALTIES BEING INSTITUTED BY THE PENNSYLVANIA DEPARTMENT OF ENVIRONMENTAL PROTECTION AS DEFINED IN SECTION 602 OF THE CLEAN STREAMS LAW OF PENNSYLVANIA. THE CLEAN STREAMS LAW PROVIDES FOR UP TO $10,000 PER DAY IN CIVIL PENALTIES, UP TO $10,000 IN SUMMARY CRIMINAL PENALTIES, AND UP TO $25,000 IN MISDEMEANOR CRIMINAL PENALTIES FOR EACH VIOLATION.

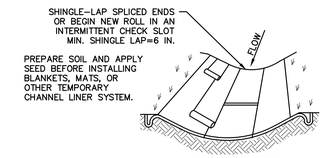

ISOMETRIC VIEW

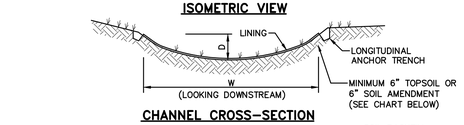

CHANNEL CROSS-SECTION

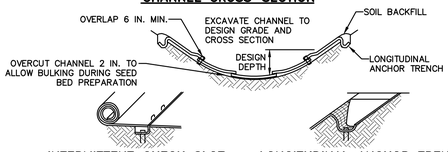

INTERMITTENT CHECK SLOT **LONGITUDINAL ANCHOR TRENCH**

SEE MANUFACTURER'S LINING INSTALLATION DETAIL FOR STAPLE PATTERNS, VEGETATIVE STABILIZATION, SEED MIXTURES AND MULCHING INFORMATION

CHANNEL NO.	DEPTH D (FT)	WIDTH W (FT)	MIN. SLOPE	MAX. SLOPE	LINING	STAPLE PATTERN	6" SOIL AMEND.
2	1.25	12	1.0	2.0	NAG S75, 12' WIDE	D	NO
3	1.00	20	6.0	6.0	NAG P300, 8' WIDE	E	NO
11A	1.25	12	1.5	8.3	NAG S75, 8' WIDE	E	YES
11B	1.25	12	1.5	2.0	NAG S75, 8' WIDE	D	YES
19	1.00	12	1.5	2.5	NAG S75, 8' WIDE	D	YES
29	1.17	12	1.5	6.7	NAG S75, 8' WIDE	D	NO
33	1.07	12	2.5	2.5	NAG S75, 8' WIDE	D	NO
37	1.17	12	1.5	4.0	NAG S75, 8' WIDE	D	NO

NOTES:
1. ANCHOR TRENCHES SHALL BE INSTALLED AT BEGINNING AND END OF CHANNEL IN THE SAME MANNER AS LONGITUDINAL ANCHOR TRENCHES.
2. CHANNEL DIMENSIONS SHALL BE CONSTANTLY MAINTAINED. CHANNEL SHALL BE CLEANED WHENEVER TOTAL CHANNEL DEPTH IS REDUCED BY 25% AT ANY LOCATION.
3. SEDIMENT DEPOSITS SHALL BE REMOVED WITHIN 24 HOURS OF DISCOVERY OR AS SOON AS SOIL CONDITIONS PERMIT ACCESS TO CHANNEL WITHOUT FURTHER DAMAGE. DAMAGED LINING SHALL BE REPAIRED OR REPLACED WITHIN 48 HOURS OF DISCOVERY.
4. NO MORE THAN ONE THIRD OF THE SHOOT (GRASS LEAF) SHALL BE REMOVED IN ANY MOWING. GRASS HEIGHT SHALL BE MAINTAINED BETWEEN 2 AND 3 INCHES UNLESS OTHERWISE SPECIFIED. EXCESS VEGETATION SHALL BE REMOVED FROM PERMANENT CHANNELS TO ENSURE SUFFICIENT CHANNEL CAPACITY.

PARABOLIC VEGETATED CHANNEL

NOT TO SCALE

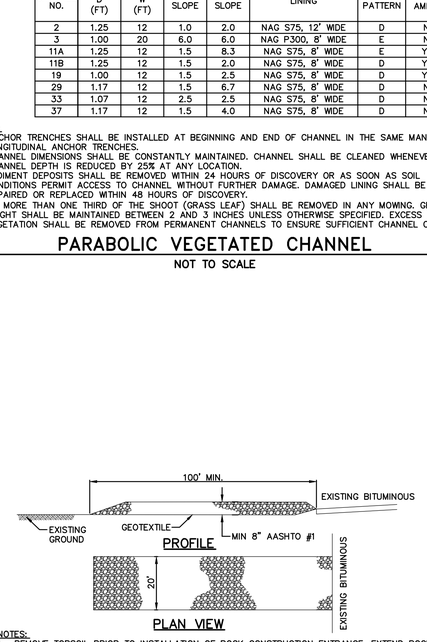

NOTES:
1. REMOVE TOPSOIL PRIOR TO INSTALLATION OF ROCK CONSTRUCTION ENTRANCE. EXTEND ROCK OVER FULL WIDTH OF ENTRANCE.
2. RUNOFF SHALL BE DIVERTED FROM ROADWAY TO A SUITABLE SEDIMENT REMOVAL BMP PRIOR TO ENTERING ROCK CONSTRUCTION ENTRANCE.
3. MAINTENANCE: ROCK CONSTRUCTION ENTRANCE THICKNESS SHALL BE CONSTANTLY MAINTAINED TO THE SPECIFIED DIMENSIONS BY ADDING ROCK. A STOCKPILE SHALL BE MAINTAINED ON SITE FOR THIS PURPOSE. ALL SEDIMENT DEPOSITED ON PAVED ROADWAYS SHALL BE REMOVED AND RETURNED TO THE CONSTRUCTION SITE IMMEDIATELY. IF EXCESSIVE AMOUNTS OF SEDIMENT ARE BEING DEPOSITED ON ROADWAY, EXTEND LENGTH OF ROCK CONSTRUCTION ENTRANCE BY 50 FOOT INCREMENTS UNTIL CONDITION IS ALLEVIATED OR INSTALL WASH RACK. WASHING THE ROADWAY OR SWEEPING THE DEPOSITS INTO ROADWAY DITCHES, SEWERS, CULVERTS, OR OTHER DRAINAGE COURSES IS NOT ACCEPTABLE.

ROCK CONSTRUCTION ENTRANCE

NOT TO SCALE

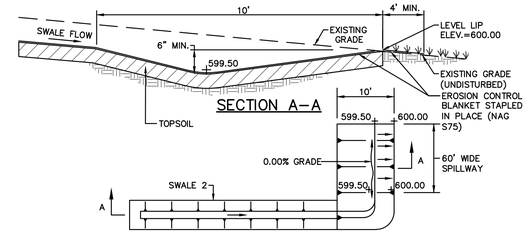

EARTHEN LEVEL SPREADER

NOT TO SCALE

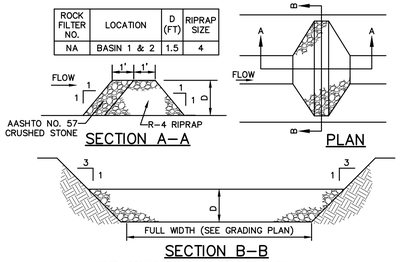

NOTE: SEDIMENT MUST BE REMOVED WHEN ACCUMULATIONS REACH 1/2 THE HEIGHT OF THE FILTER

PERMANENT ROCK FILTER

NOT TO SCALE

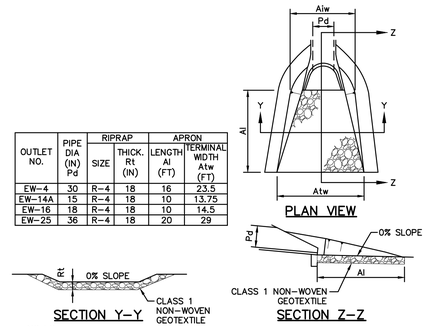

OUTLET NO.	PIPE DIA (IN) Pd	RIPRAP SIZE	RIPRAP THICK. Rt (IN)	APRON LENGTH Al (FT)	APRON TERMINAL WIDTH Atw (FT)
EW-4	30	R-4	18	16	23.5
EW-14A	15	R-4	18	10	13.75
EW-16	18	R-4	18	10	14.5
EW-25	36	R-4	18	20	29

NOTES:
1. ALL APRONS SHALL BE CONSTRUCTED TO THE DIMENSIONS SHOWN. TERMINAL WIDTHS SHALL BE ADJUSTED AS NECESSARY TO MATCH RECEIVING CHANNELS.
2. ALL APRONS SHALL BE INSPECTED AT LEAST WEEKLY AND AFTER EACH RUNOFF EVENT. DISPLACED RIPRAP WITHIN THE APRON SHALL BE REPLACED IMMEDIATELY.

RIP-RAP AT PIPE OUTLET WITH ENDWALL

NOT TO SCALE

NO.	DATE	REVISION
3	12-21-21	REVISED PER N. LEB. TWP., LEB. CNTY. ENG. & THE REVISED WALL DESIGN
2	9-29-21	REVISED PER SEWER AUTH, N. LEB. TWP., LEB. CNTY. ENG. & THE REVISED WALL DESIGN
1	6-18-21	REVISED PER LCCD, DEP, SEWER AUTH., N. LEB. TWP., & LCPD

FOR PIONEER MANAGEMENT BY:

MANAGER: JAMES C. HENKE
DESIGN BY: JDB/KWG
CHKD BY: JDB/JCH
SURV. CHIEF:
DRAWN BY: JDB/MLS
CHKD BY: JCH
FIELDBOOK NO.
DRAWING REFERENCE: Z:\18\18-2000-01\CAD\Final Plan\Details.dwg
XREFS: TBL [Z:\18\18-2000-01\CAD\Final Plan\X-Mark\TBL.dwg]

CLIENT
MR. S. GERALD MUSSER
144 BELL ROAD
PALMYRA, PA 17078
(717) 821-1129

SCALE: AS NOTED

PIONEER Management, LLC
111 Millersville Road, Lancaster, PA 17603
Phone: (717) 481-4550 Fax: (717) 481-4555
Email: jrb@pioneermanagementllc.com
Website: www.pioneermanagementllc.com

EROSION AND SEDIMENTATION CONTROL DETAILS

FOR THE FINAL SUBDIVISION AND LAND DEVELOPMENT PLAN OF

MAPLEDALE ESTATES

NORTH LEBANON TOWNSHIP LEBANON COUNTY, PA

DATE: FEB. 25, 2021

SHEET NO. 35 OF 36

DWG. NO. 18-2000-01-B

EROSION & SEDIMENT POLLUTION CONTROL NOTES:

A. GENERAL EROSION AND SEDIMENT CONTROL GUIDELINES

1. THE CONTRACTOR IS ADVISED TO BECOME THOROUGHLY FAMILIAR WITH THE PROVISIONS OF THE APPENDIX 64, EROSION CONTROL RULES AND REGULATIONS, TITLE 25, PART 1, DEPARTMENT OF ENVIRONMENTAL PROTECTION, SUBPART C, PROTECTION OF NATURAL RESOURCES, ARTICLE III, WATER RESOURCES, CHAPTER 102, EROSION CONTROL.
2. A COPY OF THIS PLAN SHALL BE KEPT AVAILABLE FOR INSPECTION ON THE CONSTRUCTION SITE AT ALL TIMES THROUGH THE TERMS OF THE PROJECT.
3. THE INTENT OF THIS PLAN/NARRATIVE IS TO INDICATE GENERAL MEANS OF COMPLIANCE WITH THE REQUIREMENTS OF THE RULES AND REGULATIONS OF CHAPTER 102 OF THE PENNSYLVANIA CLEAN STREAMS LAW. IT SHALL BE THE RESPONSIBILITY OF THE CONTRACTOR TO IMPLEMENT THESE METHODS PLUS ADDITIONAL METHODS AS MAY BE NECESSARY BECAUSE OF THE CONDITIONS CREATED BY LOCALIZED SITE CONDITIONS AND/OR CONSTRUCTION PROCEDURES IN ORDER TO ASSURE COMPLIANCE WITH APPLICABLE LAW. IT SHALL BE THE RESPONSIBILITY OF THE CONTRACTOR TO MAINTAIN ALL SEDIMENT AND EROSION CONTROL FACILITIES SO THAT THEY PERFORM AS REQUIRED BY LAW.
4. CONTRACTOR SHALL MAINTAIN A WRITTEN REPORT DOCUMENTING EACH INSPECTION AND ALL BMP REPAIR OR REPLACEMENT AND MAINTENANCE ACTIVITIES.

B. GENERAL SEDIMENT AND EROSION CONTROL METHODS/PROCEDURES

1. IN ALL CASES, THE SMALLEST PRACTICAL AREA OF STABLE LAND SURFACE SHALL BE DISTURBED.
2. ALL RELATED SEDIMENT AND EROSION CONTROL FACILITIES SHALL BE IN PLACE AND CAPABLE OF FUNCTIONING AS INTENDED PRIOR TO EARTHMOVING ACTIVITY WITHIN THEIR CONTRIBUTING WATERSHED AREAS.
3. UTILITY EXCAVATIONS SHALL BE OPEN ONLY LONG ENOUGH TO PROPERLY INSTALL AND INSPECT ALL UNDERGROUND FACILITIES IN ACCORDANCE WITH APPLICABLE SPECIFICATIONS.
4. EXCAVATED MATERIAL (SPOIL) SHALL BE PLACED UP SLOPE FROM THE EXCAVATION WHENEVER POSSIBLE. RUNOFF FROM SPOIL PILES SHALL BE DIRECTED THROUGH A SEDIMENT FILTER STRUCTURE AND DISCHARGED IN A NON-EROSIVE MANNER.
5. DEWATERING EQUIPMENT DISCHARGE SHALL BE DIRECTED ONTO A STABILIZED SURFACE SO THAT EROSION DOES NOT OCCUR. DISCHARGES SHALL BE DIRECTED THROUGH A SEDIMENT FILTER STRUCTURE AND DISCHARGED IN A NON-EROSIVE MANNER.
6. ALL PUMPING OF SEDIMENT LADEN WATER SHALL BE THROUGH A DIRT BAG FILTRATION DEVICE, OR EQUIVALENT SEDIMENT REMOVAL FACILITY, OVER NON-DISTURBED VEGETATED AREAS. DISCHARGE POINTS SHOULD BE ESTABLISHED TO PROVIDE FOR MAXIMUM DISTANCE TO ACTIVE WATERWAYS.
7. BACKFILLED EXCAVATIONS SHALL BE RESTORED TO ORIGINAL TYPE OF COVER AND GRADE AS PER SPECIFICATIONS. SEEDING SHALL BE DONE ACCORDING TO SCHEDULE FOR PERMANENT SEEDING. TEMPORARY STABILIZATION IS REQUIRED FOR ANY AND ALL ERODIBLE/SOLUBLE AREAS AND MATERIALS TO BE EXPOSED.
8. LAWN AREAS SHALL BE FINISHED GRADED WITH 6-INCHES OF TOPSOIL UNLESS OTHERWISE NOTED. POSITIVE DRAINAGE SHALL BE MAINTAINED AWAY FROM ALL STRUCTURES. NO ISOLATED LOW SPOTS SHALL BE CREATED.
9. CONSTRUCTION ACCESS INTO UNPAVED AREAS FROM PAVED AREAS OR STREETS (PUBLIC OR PRIVATE) SHALL BE VIA A STABILIZED CONSTRUCTION ENTRANCE.
10. SHOULD UNFORESEEN EROSIVE CONDITIONS DEVELOP DURING CONSTRUCTION, THE CONTRACTOR SHALL TAKE ACTION TO REMEDY SUCH CONDITIONS AND TO PREVENT DAMAGE TO ADJACENT PROPERTIES AS RESULT OF INCREASED RUNOFF AND/OR SEDIMENT DISPLACEMENT. STOCKPILES OF WOOD CHIPS, HAY BALES, CRUSHED STONE AND OTHER MULCHES SHALL BE IN READINESS TO DEAL IMMEDIATELY WITH EMERGENCY PROBLEMS OF EROSION.
11. DIVERSION CHANNELS, SEDIMENTATION BASINS, SEDIMENT TRAPS, AND STOCKPILES MUST BE STABILIZED IMMEDIATELY.
12. ALL CHANNELS MUST BE KEPT FREE OF OBSTRUCTIONS SUCH AS FILL GROUND, FALLEN LEAVES & WOODY DEBRIS, ACCUMULATED SEDIMENT, AND CONSTRUCTION MATERIALS/WASTES. CHANNELS SHOULD BE KEPT MOWED AND/OR FREE OF ALL WEEDY, BRUSHY OR WOODY GROWTH. ANY UNDERGROUND UTILITIES RUNNING ACROSS/THROUGH THE CHANNEL(S) SHALL BE IMMEDIATELY BACKFILLED AND THE CHANNEL(S) REPAIRED AND STABILIZED PER THE CHANNEL CROSS-SECTION DETAIL.
13. VEGETATED CHANNELS SHALL BE CONSTRUCTED FREE OF ROCKS, TREE ROOTS, STUMPS OR OTHER PROJECTIONS THAT WILL IMPEDE NORMAL CHANNEL FLOW AND/OR PREVENT GOOD LINING TO SOIL CONTACT. THE CHANNEL SHALL BE INITIALLY OVER-EXCAVATED TO ALLOW FOR THE PLACEMENT OF TOPSOIL.

C. MAINTENANCE OF SEDIMENT AND EROSION CONTROL FACILITIES

1. MAINTENANCE OF ALL STORMWATER, EROSION AND SEDIMENTATION CONTROL AND DETENTION FACILITIES SHALL COMMENCE IMMEDIATELY AFTER CONSTRUCTION BEGINS. ACCUMULATED SEDIMENT DEPOSITS SHALL BE REGULARLY REMOVED IN ORDER TO MAINTAIN PROPER PERFORMANCE.
2. IF SPOIL MATERIAL OR SOIL IS PLACED ON-SITE, IT SHALL NOT BE PLACED IN OR AROUND ANY EXISTING EROSION AND SEDIMENTATION CONTROL STRUCTURE (I.E. SEDIMENT BASIN, SILT FENCE) AND OR WATERWAY. IT SHOULD BE PLACED AND STABILIZED IMMEDIATELY.
3. ALL SEDIMENT AND EROSION FACILITIES MUST BE MAINTAINED IN OPERATING CONDITION UNTIL UPSTREAM AREAS ARE STABILIZED.
4. STORMWATER INLETS WHICH DO NOT DISCHARGE TO SEDIMENT TRAPS OR BASINS, MUST BE PROTECTED UNTIL THE CONTRIBUTORY AREAS ARE STABILIZED.
5. SEDIMENT MUST BE REMOVED FROM THE INLET PROTECTION AFTER EACH STORM EVENT, OR WHEN THE DISTANCE BETWEEN THE GRATE AND THE SEDIMENT LEVEL IS REDUCED TO 18" IN A SILTSACK.
6. MAINTENANCE MUST INCLUDE INSPECTION OF ALL EROSION AND SEDIMENTATION CONTROLS AFTER EACH RUNOFF EVENT (AT LEAST 0.25") AND ON A WEEKLY BASIS.
7. AFTER FINAL SITE STABILIZATION HAS BEEN ACHIEVED, TEMPORARY EROSION AND SEDIMENTATION CONTROLS MUST BE REMOVED. ANY AREAS DISTURBED BY REMOVAL OF CONTROLS SHALL BE STABILIZED IMMEDIATELY.
8. SEDIMENT SPILLED, DROPPED OR TRACKED ONTO PAVED SURFACES SHALL BE REMOVED IMMEDIATELY.
9. AT THE END OF EACH WORKING DAY, ANY SEDIMENT TRACKED OR CONVEYED ONTO A PUBLIC ROADWAY WILL BE REMOVED AND REDEPOSITED ONTO THE CONSTRUCTION SITE. REMOVAL CAN BE COMPLETED THROUGH USE OF MECHANICAL OR HAND TOOLS, BUT MUST NEVER BE WASHED OFF THE ROAD BY USE OF WATER.
10. SEDIMENT REMOVED FROM THE E&SPC CONTROLS & FACILITIES SHALL BE DISPOSED OF IN LANDSCAPED AREAS OUTSIDE OF STEEP SLOPES, WETLANDS, FLOODPLAINS OR DRAINAGE SWALES AND IMMEDIATELY STABILIZED, OR PLACED IN TOPSOIL STOCKPILES. AN E&S PLAN SHALL BE SUBMITTED TO THE CONSERVATION DISTRICT FOR ALL OFF-SITE SPOIL AREAS.
11. SEDIMENT BASINS/TRAPS SHALL BE KEPT FREE OF ALL TRASH, CONCRETE WASH WATER AND OTHER DEBRIS THAT POSE THE POTENTIAL FOR CLOGGING THE BASIN/TRAP OUTLET STRUCTURES AND/OR POSE THE POTENTIAL FOR POLLUTION TO WATERS OF THE COMMONWEALTH.
12. WHEN SEDIMENT HAS ACCUMULATED TO THE CLEAN OUT ELEVATION ON ANY STAKE, ALL ACCUMULATED SEDIMENT SHALL BE REMOVED FROM THE ENTIRE TRAP/BASIN.
13. CONTRACTOR SHALL PREPARE AND KEEP AVAILABLE FOR INSPECTION A WRITTEN REPORT DOCUMENTING EACH INSPECTION AND ALL BMP REPAIRS, OR REPLACEMENT AND MAINTENANCE ACTIVITIES.

D. RECYCLING AND/OR DISPOSAL OF CONSTRUCTION WASTE:

1. THE CONTRACTOR MUST ENSURE THAT MECHANISMS ARE IN PLACE TO CONTROL WASTE MATERIALS. CONSTRUCTION WASTES INCLUDE, BUT ARE NOT LIMITED TO, EXCESS SOIL MATERIALS, BUILDING MATERIALS, CONCRETE WASH WATER, SANITARY WASTES, ETC. THAT COULD ADVERSELY IMPACT WATER QUALITY. MEASURES SHOULD BE PLANNED AND IMPLEMENTED FOR HOUSEKEEPING, MATERIALS MANAGEMENT, AND LITTER CONTROL. RECYCLING OF EXCESS MATERIALS IS PREFERRED, RATHER THAN DISPOSAL. ALL RECYCLING AND DISPOSAL MUST BE IN ACCORDANCE WITH LOCAL AND STATE RULES FOR WASTE MANAGEMENT. THE OPERATOR SHALL REMOVE FROM THE SITE, RECYCLE, OR DISPOSE OF ALL BUILDING MATERIALS AND WASTES IN ACCORDANCE WITH THE DEPARTMENT'S SOLID WASTE MANAGEMENT REGULATIONS AT 25 PA. CODE 260.1 et seq., 271.1 et seq., AND 287.1 et seq. THE CONTRACTOR SHALL NOT ILLEGALLY BURY, DUMP, OR DISCHARGE ANY BUILDINGS MATERIALS OR WASTES.

E. RESTORATION OF PLANTING AREAS

1. FINAL RESTORATION SHALL BE PERFORMED NO LATER THAN THE START OF THE NEXT PLANTING SEASON FOLLOWING CONSTRUCTION. THE PLANTING SEASON SHALL BE AS ESTABLISHED BY THE U.S. AGRICULTURAL SERVICE FOR THE AREA OF CONSTRUCTION.
2. TOPSOIL SHALL BE FREE FROM SUBSOIL, BRUSH, WEEDS, OR OTHER LITTER, CLAY LUMPS AND STONES, BUT MAY CONTAIN DECAYING VEGETABLE MATTER AS IS PRESENT IN GOOD TOPSOIL.
3. PRECAUTIONS SHALL BE EXERCISED AS NECESSARY TO CONFORM WITH LAWS RELATING TO EROSION AND SEDIMENT CONTROL.
4. SEED SHALL BE NOT MORE THAN TWO (2) YEARS OLD. GERMINATION TESTS OF SEEDS SHALL BE MADE NOT MORE THAN SIX (6) MONTHS PRIOR TO SEEDING. SEED WHICH HAS BECOME WET, MOLDY, OR OTHERWISE DAMAGED SHALL NOT BE USED.
5. THE CONTRACTOR SHALL BE RESPONSIBLE TO PRODUCE A STAND OF GRASS IN ALL SEEDED OR SODDED AREAS. EROSION, DROUGHT, OR ANY OTHER CONDITION ENCOUNTERED SHALL NOT RELIEVE THE CONTRACTOR OF THIS REQUIREMENT.

F. CLEAN FILL AND ENVIRONMENTAL DUE DILIGENCE REQUIREMENTS

1. CLEAN FILL IS DEFINED AS: UNCONTAMINATED, NON-WATER SOLUBLE, NON-DECOMPOSABLE, INERT, SOLID MATERIAL. THE TERM INCLUDES SOIL, ROCK, STONE, DREDGED MATERIAL, USED ASPHALT AND BRICK, BLOCK OR CONCRETE FROM CONSTRUCTION AND DEMOLITION ACTIVITIES THAT IS SEPARATED FROM OTHER WASTE AND IS RECOGNIZABLE AS SUCH. THE TERM DOES NOT INCLUDE MATERIALS PLACED IN OR ON THE WATERS OF THE COMMONWEALTH UNLESS OTHERWISE AUTHORIZED. (THE TERM "USED ASPHALT" DOES NOT INCLUDE MILLED ASPHALT OR ASPHALT THAT HAS BEEN PROCESSED FOR RE-USE.)
2. ANY PLACEMENT OF CLEAN FILL THAT HAS BEEN AFFECTED BY A SPILL OR RELEASE OF A REGULATED SUBSTANCE MUST USE FORM FP-001 TO CERTIFY THE ORIGIN OF THE FILL MATERIAL AND THE RESULTS OF THE ANALYTICAL TESTING TO QUALIFY THE MATERIAL AS CLEAN FILL. FORM FP-001 MUST BE RETAINED BY THE OWNER OF THE PROPERTY RECEIVING THE FILL.
3. ENVIRONMENTAL DUE DILIGENCE MUST BE PERFORMED TO DETERMINE IF THE FILL MATERIALS ASSOCIATED WITH THE PROJECT QUALIFY AS CLEAN FILL. ENVIRONMENTAL DUE DILIGENCE IS DEFINED AS: INVESTIGATIVE TECHNIQUES, INCLUDING, BUT NOT LIMITED TO, VISUAL PROPERTY INSPECTIONS, ELECTRONIC DATA BASE SEARCHES, REVIEW OF PROPERTY OWNERSHIP, REVIEW OF PROPERTY USE HISTORY, SANBORN MAPS, ENVIRONMENTAL QUESTIONNAIRES, TRANSACTION SCREENS, ANALYTICAL TESTING, ENVIRONMENTAL ASSESSMENTS OR AUDITS. ANALYTICAL TESTING IS NOT A REQUIRED PART OF DUE DILIGENCE UNLESS VISUAL INSPECTION AND/OR REVIEW OF THE PAST LAND USE OF THE PROPERTY INDICATES THAT THE FILL MAY HAVE BEEN SUBJECTED TO A SPILL OR RELEASE OF A REGULATED SUBSTANCE. IF THE FILL MAY HAVE BEEN AFFECTED BY A SPILL OR RELEASE OF A REGULATED SUBSTANCE, IT MUST BE TESTED TO DETERMINE IF IT QUALIFIES AS CLEAN FILL. TESTING SHOULD BE PERFORMED IN ACCORDANCE WITH APPENDIX A OF THE DEPARTMENT'S POLICY "MANAGEMENT OF CLEAN FILL."

G. STABILIZATION PROCEDURES

1. STOCKPILE HEIGHTS MUST NOT EXCEED 35 FEET. STOCKPILE SLOPES MUST BE 2H:1V OR FLATTER.
2. TOPSOIL SHOULD NOT BE PLACED WHILE THE TOPSOIL OR SUBSOIL IS IN A FROZEN OR MUDDY CONDITION, WHEN THE SUBSOIL IS EXCESSIVELY WET, OR IN A CONDITION THAT MAY OTHERWISE BE DETRIMENTAL TO PROPER GRADING AND SEEDBED PREPARATION. COMPACTED SOILS SHOULD BE SCARIFIED 6 TO 12 INCHES ALONG CONTOUR WHEREVER POSSIBLE PRIOR TO SEEDING.
3. AREAS WHICH ARE TO BE TOPSOILED SHALL BE SCARIFIED TO A MINIMUM DEPTH OF 3-5 INCHES PRIOR TO PLACEMENT OF TOPSOIL. AREAS TO BE VEGETATED SHALL HAVE A MINIMUM 6 INCHES OF TOPSOIL IN PLACE PRIOR TO SEEDING AND MULCHING. FILL 3:1 OR GREATER SHALL HAVE A MINIMUM OF 2 INCHES OF TOPSOIL.
4. UPON TEMPORARY CESSATION OF AN EARTH DISTURBANCE OR ANY STAGE OR PHASE OF AN ACTIVITY WHERE A CESSATION OF EARTH DISTURBANCE ACTIVITIES EXCEED 4 DAYS, THE SITE SHALL BE IMMEDIATELY SEEDED, MULCHED OR OTHERWISE PROTECTED FROM ACCELERATED EROSION AND SEDIMENTATION PENDING FUTURE EARTH DISTURBANCE ACTIVITIES.
5. MULCH OF LONG STEM STRAW SHALL BE APPLIED AT EVEN APPLICATION OF 3 TONS PER ACRE, WITH A SURFACE COVERAGE OF 80-90% STRAW MULCH SHOULD BE ANCHORED IMMEDIATELY AFTER APPLICATION TO PREVENT BEING WINDBLOWN.
6. ALL GRADED AREAS SHALL BE PERMANENTLY STABILIZED IMMEDIATELY UPON REACHING FINISHED GRADE. CUT SLOPES IN COMPETENT BEDROCK AND ROCK FILLS NEED NOT BE VEGETATED.
7. EROSION CONTROL BLANKETING (SPAY-ON TYPE RECOMMENDED) SHALL BE INSTALLED ON ALL SLOPES 3H:1V OR STEEPER, WITHIN 50 FEET OF A SURFACE WATER AND ON ALL OTHER DISTURBED AREAS SPECIFIED ON THE PLAN MAPS AND/OR DETAIL SHEETS.
8. IMMEDIATELY AFTER EARTH DISTURBANCE ACTIVITIES CEASE IN ANY AREA OR SUBAREA OF THE PROJECT, THE OPERATOR SHALL STABILIZE ALL DISTURBED AREAS. DURING NON-GERMINATING MONTHS, MULCH OR PROTECTIVE BLANKETING SHALL BE APPLIED AS DESCRIBED IN THE PLAN. AREAS NOT AT FINISHED GRADE, WHICH WILL BE REACTIVATED WITHIN 1 YEAR, MAY BE STABILIZED IN ACCORDANCE WITH THE TEMPORARY STABILIZATION SPECIFICATIONS. THOSE AREAS WHICH WILL NOT BE REACTIVATED WITHIN 1 YEAR SHALL BE STABILIZED IN ACCORDANCE WITH THE PERMANENT STABILIZATION SPECIFICATIONS.
9. PERMANENT STABILIZATION IS DEFINED AS A MINIMUM UNIFORM, PERENNIAL 70% VEGETATIVE COVER OR OTHER PERMANENT NON-VEGETATIVE COVER OVER THE ENTIRE DISTURBED AREA WITH A DENSITY SUFFICIENT TO RESIST ACCELERATED EROSION. CUT AND FILL SLOPES SHALL BE CAPABLE OF RESISTING FAILURE DUE TO SLUMPING, SLIDING, OR OTHER MOVEMENTS.
10. SURFACE ROUGHENING SHALL BE APPLIED TO ALL CUT AND FILL SLOPES 3:1 OR STEEPER UNLESS A STABLE ROCK FACE EXISTS OR IT CAN BE SHOWN THAT THERE IS NOT A POTENTIAL FOR SEDIMENT POLLUTION TO SURFACE WATERS. FOR ROUGHENED SURFACES WHERE BLANKETING OF SEEDED AREAS IS PROPOSED, SPAY-ON TYPE BLANKETS (SUCH AS COMPOSTING OR A FLEXIBLE GROWTH MEDIUM) ARE RECOMMENDED. SURFACE ROUGHENING MAY BE DONE BY RUNNING TRACKED MACHINERY UP AND DOWN THE SLOPE, LEAVING TREAD MARKS PARALLEL TO CONTOUR.
11. AS DISTURBED AREAS WITHIN A PROJECT APPROACH FINAL GRADE, PREPARATIONS SHOULD BE MADE FOR SEEDING AND MULCHING TO BEGIN (I.E. ANTICIPATE THE COMPLETION DATE AND SCHEDULE THE SEEDER). IN NO CASE SHOULD AN AREA EXCEEDING 15,000 SQUARE FEET WHICH IS TO BE STABILIZED BY VEGETATION, REACH FINAL GRADE WITHOUT BEING SEEDED AND MULCHED. WAITING UNTIL EARTHMOVING IS COMPLETED BEFORE MAKING PREPARATIONS FOR SEEDING AND MULCHING IS NOT ACCEPTABLE.

LIABILITY NOTE:

FAILURE TO CORRECTLY INSTALL SEDIMENT CONTROL FACILITIES OR FAILURE TO PREVENT SEDIMENT LADEN RUNOFF FROM LEAVING THE CONSTRUCTION SITE OR FAILURE TO TAKE CORRECTIVE ACTIONS TO IMMEDIATELY RESOLVE FAILURES OF SEDIMENT CONTROL FACILITIES MAY RESULT IN ADMINISTRATIVE, CIVIL AND/OR CRIMINAL PENALTIES BEING INSTITUTED BY THE PENNSYLVANIA DEPARTMENT OF ENVIRONMENTAL PROTECTION AS DEFINED IN SECTION 602 OF THE CLEAN STREAMS LAW OF PENNSYLVANIA. THE CLEAN STREAMS LAW PROVIDES FOR UP TO $10,000 PER DAY IN CIVIL PENALTIES, UP TO $10,000 IN SUMMARY CRIMINAL PENALTIES, AND UP TO $25,000 IN MISDEMEANOR CRIMINAL PENALTIES FOR EACH VIOLATION.

SEEDING NOTES: TEMPORARY

MULCH – CLEAN OAT OR WHEAT STRAW SHALL BE FREE FROM MATURE SEED– BEARING STALKS OR ROOTS OF PROHIBITED OR NOXIOUS WEEDS AS DEFINED BY THE PENNSYLVANIA SEED ACT 1947. APPLY AT A RATE 3 TONS PER ACRE. PRECAUTIONS SHALL BE TAKEN TO STABILIZE THE MULCH UNTIL THE VEGETATIVE COVER IS ESTABLISHED.

SEED MIXTURE SHALL BEAR A GUARANTEED STATEMENT OF ANALYSIS AND SHALL BE COMPOSED OF THE VARIETIES FOLLOWING AND MIXED IN THE OF PROPORTIONS SPECIFIED.

TEMPORARY SEED MIXTURE	PROPORTION BY WEIGHT	MINIMUM PURITY	MINIMUM GERMINATION
Kentucky 31 Tall Fescue	75%	95%	80%
Ryegrass or Red Fescue	25%	95%	80%

THREE PERCENT REDTOP MAY BE ADDED TO THE LAWN MIXTURE ON SLOPE AREAS OR FOR LATE SPRING OR LATE FALL SEEDING.

TEMPORARY SEEDING SHALL BE APPLIED AT THE RATE OF ONE (1) POUND PER THOUSAND (1,000) SQUARE FEET.

ALL AREAS TO BE SEEDED SHALL BE LOOSENED TO A DEPTH OF AT LEAST TWO INCHES BY MECHANICAL MEANS.

MULCH SEEDED AREAS IMMEDIATELY AFTER SEEDING.

LIMESTONE AND FERTILIZER SHALL BE APPLIED UNIFORMLY TO AREAS TO BE SEEDED, AND WORKED INTO THE SOIL TO A DEPTH OF 2".
Limestone – pulv. Ag.
Limestone – 50 lbs./1000 s.f.
Fertilizer – 10-20-20
Fertilizer – 10 lbs./1000 s.f.
SEEDING – SEED ALL DISTURBED AREAS WITH THE TEMPORARY SEED MIXTURE. SEEDING SHALL OCCUR BETWEEN MARCH 15 – JUNE 15 OR AUGUST 15 – OCTOBER 15, UNLESS OTHERWISE DIRECTED BY THE ENGINEER.

SEEDING NOTES: PERMANENT

ALL TOPSOIL SHALL BE LOOSENED TO A DEPTH OF AT LEAST 4". ALL OBJECTIONABLE MATERIAL LARGER THAN 2" SHALL BE REMOVED.

LIMESTONE AND FERTILIZER SHALL BE APPLIED UNIFORMLY TO AREAS TO BE SEEDED, AND WORKED INTO THE SOIL TO A DEPTH OF 2".

LIMESTONE – PULV. AG.
LIMESTONE – 50 LBS./1000 S.F.
FERTILIZER – 10-20-20 ANALYSIS COMM.
FERTILIZER – 10 LBS./1000 S.F.

SEED MIXTURE
OVERTIME TALL FESCUE MIX
FORMULATION:
34% COCHISE III TURF TYPE TALL FESCUE
33% CORTEZ II TURF TYPE TALL FESCUE
33% EXPEDITION TURF TYPE TALL FESCUE

SEEDING RATES:
NEW LAWNS: 7-10 LBS. PER 1,000 S.F.
OVERSEEDING: 3½-5 LBS. PER 1,000 S.F.

METHOD OF SEEDING:
BROADCAST SEED FOLLOWED BY LIGHTLY ROLLING OR PACKING SEED. SEED TO SOIL CONTACT IS VITAL TO HAVING A SUCCESSFUL STAND. SEED SHOULD BE PLANTED NO MORE THAN ¼ INCH DEEP. OVERSEEDING CAN BE DONE WITH A SLIT SEEDER.

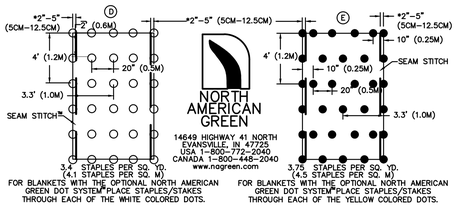

*LOCATION OF SEAM STITCH WILL VARY DEPENDING ON NORTH AMERICAN GREEN PRODUCT TYPE:

STAPLE PATTERN GUIDE

NOT TO SCALE

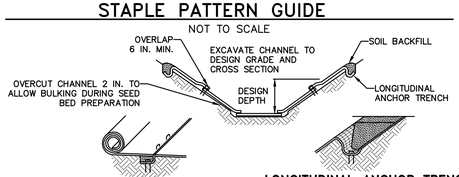

INTERMITTENT CHECK SLOT — LONGITUDINAL ANCHOR TRENCH

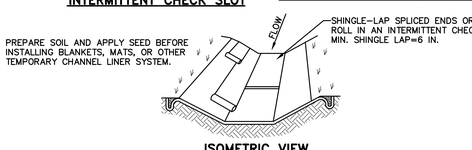

CHANNEL CROSS-SECTION

* SEE MANUFACTURER'S LINING INSTALLATION DETAIL FOR STAPLE PATTERNS, VEGETATIVE STABILIZATION FOR SOIL AMENDMENTS, SEED MIXTURES AND MULCHING INFORMATION

CHANNEL NO.	BOTTOM WIDTH B (FT)	DEPTH D (FT)	TOP WIDTH W (FT)	Z1 (FT)	Z2 (FT)	LINING *	STAPLE PATTERN	SLOPE MIN. (%)	SLOPE MAX. (%)
4	6	1.75	16.50	3	3	NAG S75, 14" WIDE	E	1.00	2.00

NOTES:
1. ANCHOR TRENCHES SHALL BE INSTALLED AT BEGINNING AND END OF CHANNEL IN THE SAME MANNER AS LONGITUDINAL ANCHOR TRENCHES.
2. CHANNEL DIMENSIONS SHALL BE CONSTANTLY MAINTAINED. CHANNEL SHALL BE CLEANED WHENEVER TOTAL CHANNEL DEPTH IS REDUCED BY 25% AT ANY LOCATION. SEDIMENT DEPOSITS SHALL BE REMOVED WITHIN 24 HOURS OF DISCOVERY OR AS SOON AS SOIL CONDITIONS PERMIT ACCESS TO CHANNEL WITHOUT FURTHER DAMAGE. DAMAGED LINING SHALL BE REPAIRED OR REPLACED WITHIN 48 HOURS OF DISCOVERY.
3. NO MORE THAN ONE THIRD OF THE SHOOT (GRASS LEAF) SHALL BE REMOVED IN ANY MOWING. GRASS HEIGHT SHALL BE MAINTAINED BETWEEN 2 AND 3 INCHES UNLESS OTHERWISE SPECIFIED. EXCESS VEGETATION SHALL BE REMOVED FROM PERMANENT CHANNELS TO ENSURE SUFFICIENT CHANNEL CAPACITY.

TEMPORARY VEGETATED CHANNEL

NOT TO SCALE

SOIL RESOLUTIONS

PRIOR TO COMMENCEMENT OF EARTHWORK, RANDOM SOIL TESTING SHOULD BE COMPLETED THROUGHOUT THE SITE. FROM THESE TESTS, IT SHOULD BE DETERMINED WHETHER OR NOT THE SOIL WARRANTS AMENDMENTS OR OTHER RESOLUTIONS AS DESCRIBED BELOW.

CUTBANKS CAVE – BERKS, COMLY AND WEIKERT SOILS. IT IS IMPERATIVE THAT PRECAUTIONS BE TAKEN TO SAFEGUARD WORKERS DURING ALL TRENCHING AND EXCAVATION OPERATIONS WITHIN THESE SOILS. ALL APPLICABLE OSHA STANDARDS AND REGULATIONS MUST BE IMPLEMENTED AT ALL TIMES.

CORROSIVE TO STEEL – BERKS, COMLY AND WEIKERT SOILS ARE CORROSIVE TO STEEL AND CONCRETE. PLASTIC PIPE WILL BE USED WHERE POSSIBLE IN THE STORM SEWER SYSTEMS.

EASILY ERODIBLE – BERKS AND COMLY SOILS ARE CONSIDERED EASILY ERODIBLE. THE USE OF EROSION CONTROL BLANKETS OR MULCHES ON SLOPES 3:1 OR GREATER ARE REQUIRED ON THIS PROJECT. THE ESTABLISHMENT PERIOD FOR A DENSE VEGETATIVE COVER IS CRITICAL. IDEALLY, FLOW SHOULD BE DIVERTED AWAY FROM PROPOSED SLOPES AND SWALES UNTIL GRASS CAN BE ESTABLISHED BUT WHEN THIS IS NOT PRACTICAL, PROPER PLACEMENT AND ANCHORING OF THE RECOMMENDED MULCH OR EROSION CONTROL BLANKET BECOMES EVEN MORE CRITICAL.

LOW STRENGTH/LANDSIDE PRONE – WEIKERT SOILS. IT IS RECOMMENDED THAT WEIKERT SOILS NOT BE USED IN BASIN EMBANKMENTS, AROUND STRUCTURES OR AS A ROADWAY SUBBASE. PRECAUTIONS SHOULD BE TAKEN TO PREVENT SLOPE FAILURES DUE TO IMPROPER CONSTRUCTION PRACTICES IN THESE SOILS SUCH AS OVER-STEEPENING AND OVERLOADING OF SLOPES, REMOVAL OF LATERAL SUPPORT, AND FAILURE TO PREVENT SATURATION OF SLOPES. ALL PROPOSED 3:1 SLOPES SHALL BE IMMEDIATELY STABILIZED WITH AN EROSION CONTROL BLANKET.

PIPING/SEEPAGE – BERKS, COMLY AND WEIKERT SOILS. THE PROPOSED ANTI-SEEP COLLARS AND CLAY CORES USED IN THE BASINS, AND THE WATERTIGHT PIPE JOINTS REQUIRED IN THE STORMSEWER SYSTEMS WILL RESOLVE THIS LIMITATION.

POOR SOURCE OF TOPSOIL – BERKS, COMLY AND WEIKERT SOILS ARE A POOR SOURCE FOR TOPSOIL. WHEREVER GOOD TO FAIR SOURCES OF TOPSOIL EXIST ON THE SITE, THEY SHOULD BE PRESERVED FOR LATER USE IN RESTORATION. SOIL TESTS ARE RECOMMENDED TO DETERMINE LIME AND FERTILIZER NEEDS.

FROST ACTION – COMLY AND WEIKERT SOILS ARE SUSCEPTIBLE TO FROST ACTION. DO NOT PLACE FOUNDATIONS, FOOTINGS, OR FILL MATERIAL ON FROZEN GROUND. WHEN FREEZING TEMPERATURES MAY BE EXPECTED, DO NOT EXCAVATE TO FULL DEPTH INDICATED, UNLESS FOUNDATIONS, FOOTINGS OR FILL MATERIAL CAN BE PLACED IMMEDIATELY AFTER EXCAVATION HAS BEEN COMPLETED AND APPROVED. PROTECT EXCAVATION FROM FROST IF PLACING OF CONCRETE IS DELAYED.

CONSTRUCTION SEQUENCE

ALL EARTH DISTURBANCE ACTIVITIES SHALL PROCEED IN ACCORDANCE WITH THE FOLLOWING STAGING OF EARTH MOVING ACTIVATES. EACH STAGE SHALL BE COMPLETED BEFORE A SUBSEQUENT STAGE IS INITIATED. ANY OTHER WORK NOT SHOWN ON THIS PLAN REQUIRES A SEPARATE EROSION AND SEDIMENTATION CONTROL PLAN.

THE LEBANON COUNTY CONSERVATION DISTRICT MUST BE NOTIFIED AT 717- 277-5275 AT LEAST 7 DAYS PRIOR TO ANY EARTH MOVING TO SCHEDULE A PRE-CONSTRUCTION MEETING.

BEFORE STARTING ANY EARTH DISTURBANCE ACTIVITIES, THE GENERAL CONTRACTOR SHALL INVITE ALL CONTRACTORS INVOLVED IN THOSE ACTIVITIES, THE COUNTY ENGINEER, THE DEVELOPER, THE EROSION AND SEDIMENTATION CONTROL PLAN DESIGNER, AND A REPRESENTATIVE OF THE LEBANON COUNTY CONSERVATION DISTRICT FOR AN ON-SITE PRE-CONSTRUCTION MEETING.

AT LEAST THREE DAYS BEFORE STARTING ANY EARTH MOVING ACTIVITY, THE CONTRACTORS INVOLVED IN THOSE ACTIVITIES SHALL NOTIFY PA ONE CALL SYSTEM INC. AT 1-800-242-1776 TO LOCATE BURIED UTILITIES.

A COPY OF THE APPROVED EROSION AND SEDIMENTATION CONTROL PLAN AND NPDES PERMIT MUST BE ON-SITE DURING CONSTRUCTION ACTIVITIES.

ONLY LIMITED DISTURBANCE WILL BE PERMITTED FOR ACCESS, GRADING AND ACQUIRING BORROW TO CONSTRUCT THE SEDIMENT BASINS. ALL PERIMETER CONTROLS (SEDIMENT BASINS AND FILTER SOCK) SHALL BE INSTALLED AND FUNCTIONAL PRIOR TO BULK GRADING.

THE CONTRACTOR SHALL KEEP DISTURBANCE TO THE MINIMUM AREA NECESSARY TO PERFORM GRADING OPERATIONS.

CESSATION OF ACTIVITIES FOR 4 DAYS OR LONGER REQUIRES TEMPOR